CONTENTS

1. Scope

This specification is applied to the dynamic speaker which is used all of the electrical acoustic product.
-- compact, rich sound
-- applications: mobile phone, PDA, notebook computer, etc. ..

2. General

2.1 Out-Diameter : 20 mm

2.2 Height : 3.8 mm

2.3 Weight : 2 g

2.4 Operating Temperature range:

-20~+70℃ without loss of function

2.5 Store Temperature range:

-30~+70℃ without loss of function

3. Electrical and Acoustic Characteristics.

Test condition : 15 ~ 35 ℃, 25% ~ 85% RH, 860~1060 mbar

3.1 speaker

No	Items	Specification
1	Impedance	8 Ω ± 15% (1Vrms at 1KHz)
2	Sound Pressure Level	90 dB ± 3dB (0.1W/0.1M at 1kHz)
3	Resonance Frequency	700 Hz ± 20%
4	Frequency Range	Fo ~20KHz
5	Input Power	Rated 0.5 W / Max. 1 W
6	Distortion	<10% Max. at 2kHz/2Vrms
7	Buss and Rattle	Should not be audible buzzes,rattles when the 2V sine wave signal swept at frequency range.
8	Polarity	When supplied plus D.C. voltage to (+) terminal, the cone diaphragm must move to forward.

3.2 Receiver

No	Items	Specification
1	Impedance	8 Ω ± 15% (at 1Vrms,1.5kHz)
2	Sound Pressure Level	120 dB ± 3dB (1kHz/60mV)
3	Frequency Range	300~3400Hz
4	Input Power	Rated 0.01 W / Max. 0.03 W
5	Distortion	<3% Max. at 1kHz/1Vrms
6	Buzz and Rattle	Should not be audible buzzes,rattles when the 0.28V sine wave signal swept at frequency range.

4. Reliability Test

After test(1~7item), the speaker S.P.L . difference shall be within ±3dB, and the appearance not exist any change to be harmful to normal operation (e.g. cracks,rusts,damages and especially distortion).

No	Items	Specification
1	High Temperature Test	After being placed in a chamber with +70±3 ℃ for 96 hours and then being placed in natural condition for 1 hour, speaker shall be measured.
2	Low Temperature Test	After being placed in a chamber with −30±3 ℃ for 96 hours and then being placed in natural condition for 1 hour, speaker shall be measured.
3	Humidity Test	After being placed in a chamber with 85 to 90%R.H. at +40±2 ℃ for hours and then being placed in natural condition for 1 hour, speaker shall be measured.
4	Thermal Shock Test	After being placed in a chamber at +70℃ for 1 hour, then speaker shall b placed in a chamber at −20℃ for 1 hour(1 cycle is the below diagram). After 6 above cycles, speaker shall be measured after being placed in natural condition for 1 hour. 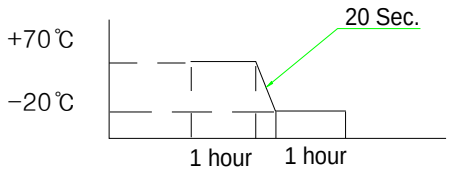
5	Vibration Test	After being applied vibration of amplitude of 1.5mm with 10 to55Hz band of vibration frequency to each of 3 perpendicular directions for 1 hour, then placed in natural condition for 1 hour, speaker shall be measured.
6	Drop Test	The speaker when mounted in the jig which weight 85g~100g, shall with stand 15 times random drops from a height of 1.5 meter to a concrete floor faced with 5mm thick hard wood board.and be nothing mechanical damage.
7	Load test	After being applied loading white noise with input power 0.5W(2Vrms.) for 96 hours, then placed in natural condition for 1 hour, speaker shall be measured.
8	Insulation test	When they are measured with DC 100V the insulation resistance between v.c. terminal and frame must be more than 1 MΩ

5. Measurement Block Diagram & Response curve

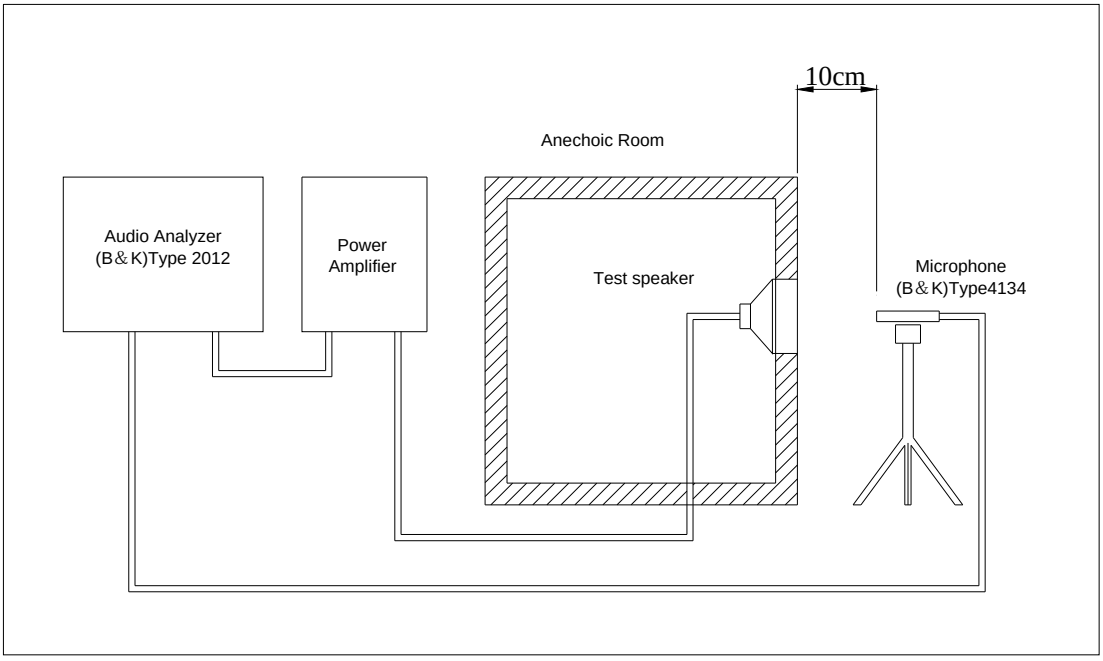

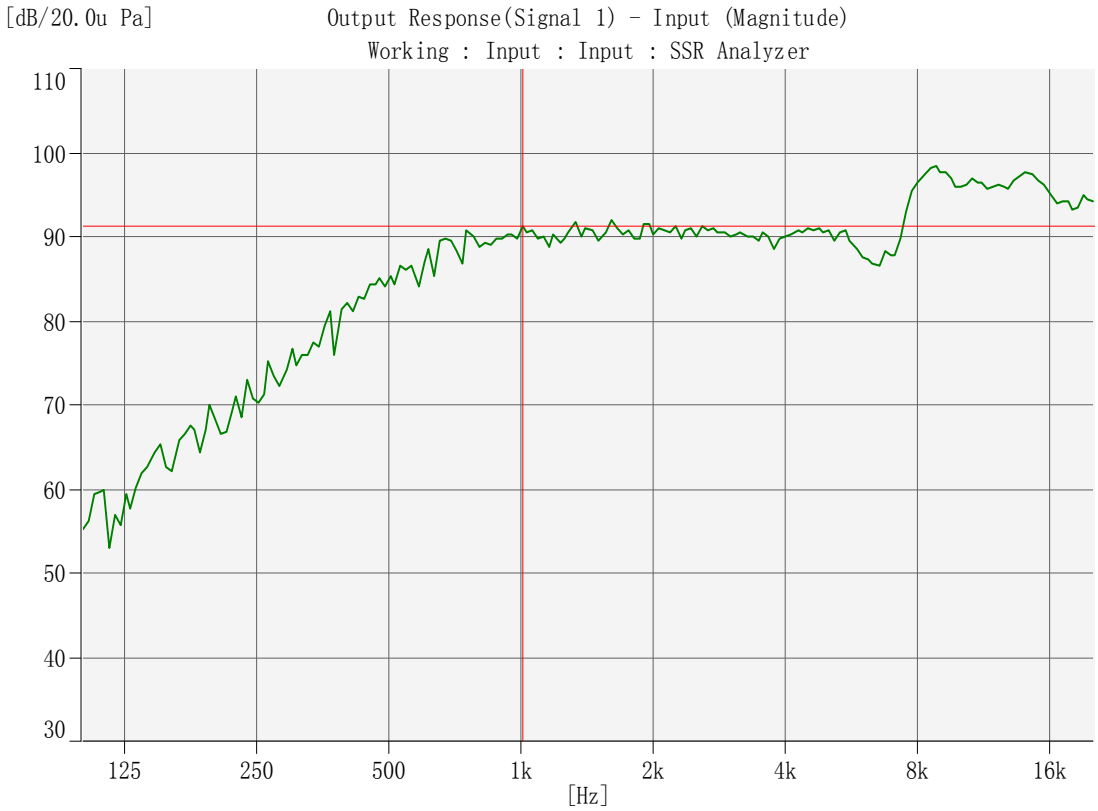

6. Measurement Block Diagram & Response curve

Receiver

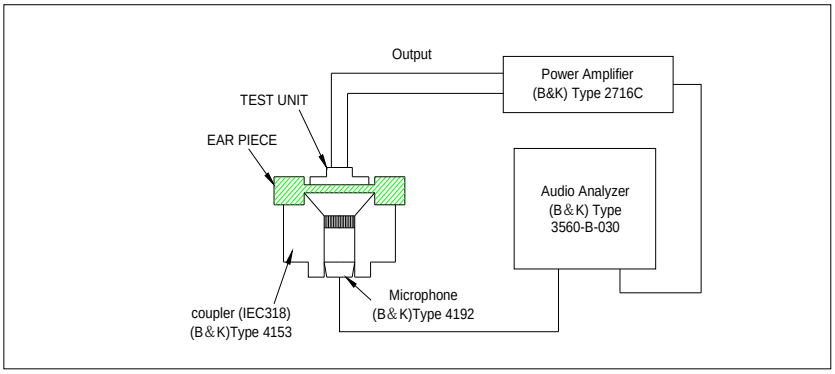

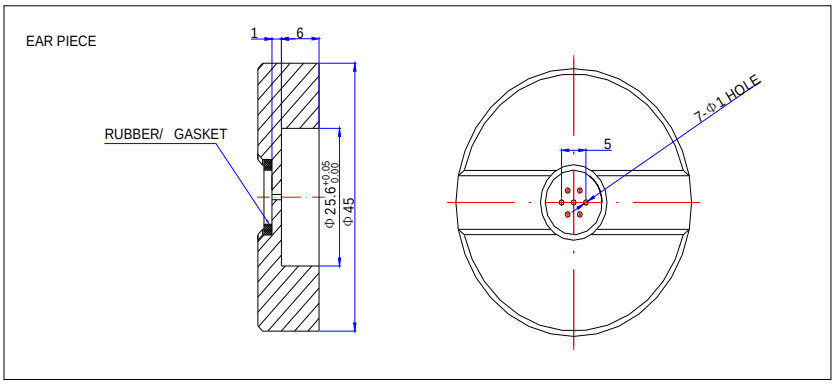

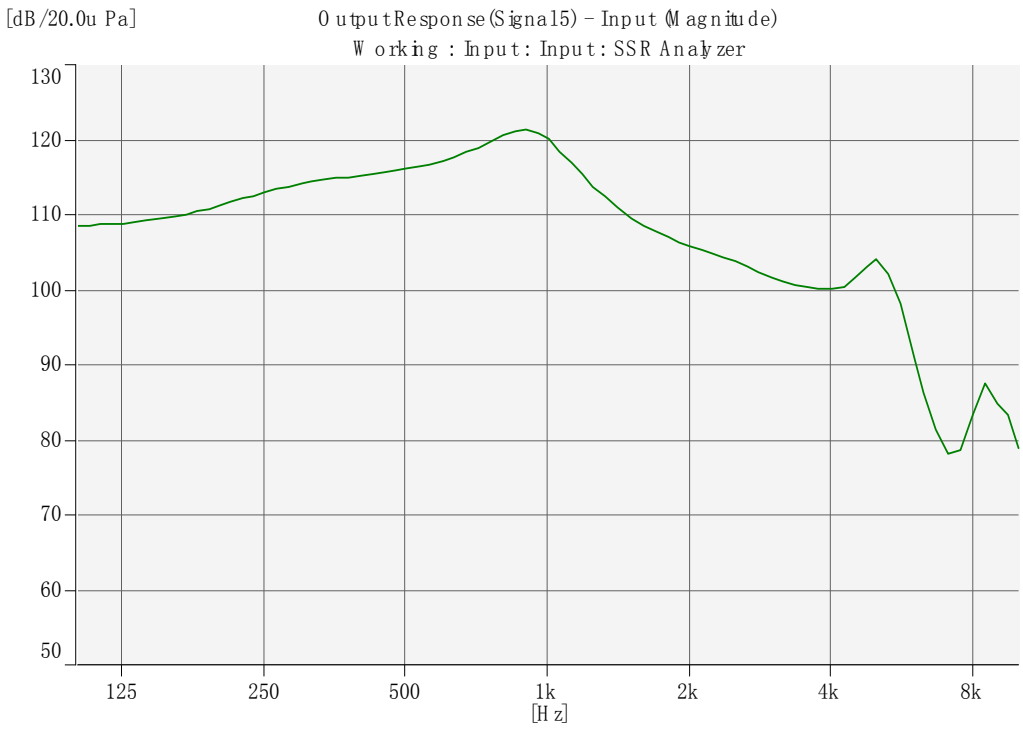

6. Structure

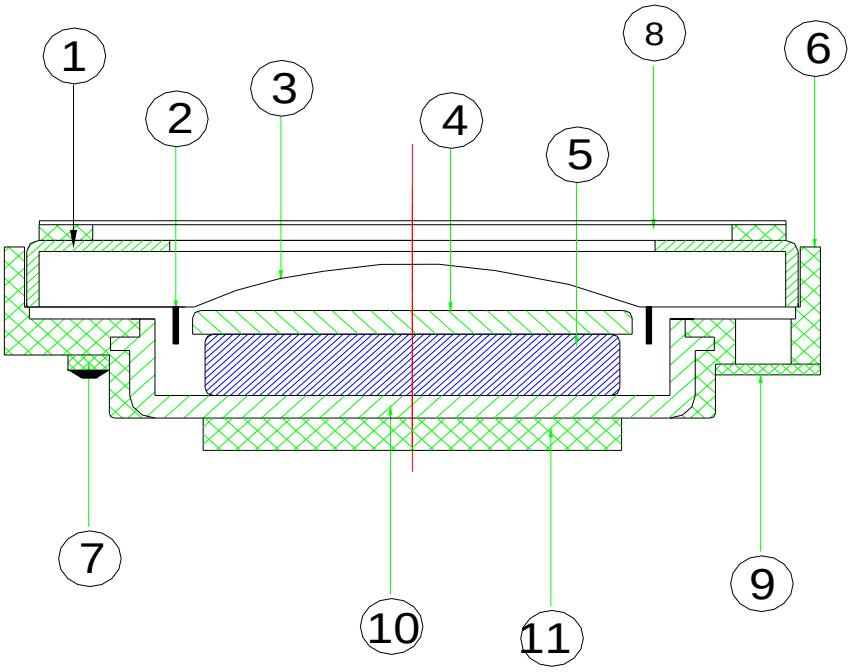

No.	Part Name	Q'ty	Material	Remarks
11	Cushion	1	paper	800+PSR0. 2+800
10	Yoke	1	SPC	
9	Screen	1	3B	
8	Gasket	1	unwoven fabric	800+2B+800+PSR0.3+800
7	Terminal	1	Epoxy PCB	
6	Frame	1	PBT	
5	Magnet	1	Nd-Fe-B	
4	Plate	1	SPC	
3	Diaphragm	1	PEN	
2	Voice Coil	1	Copper	
1	Cap	1	SUS304	

7. Dimensions

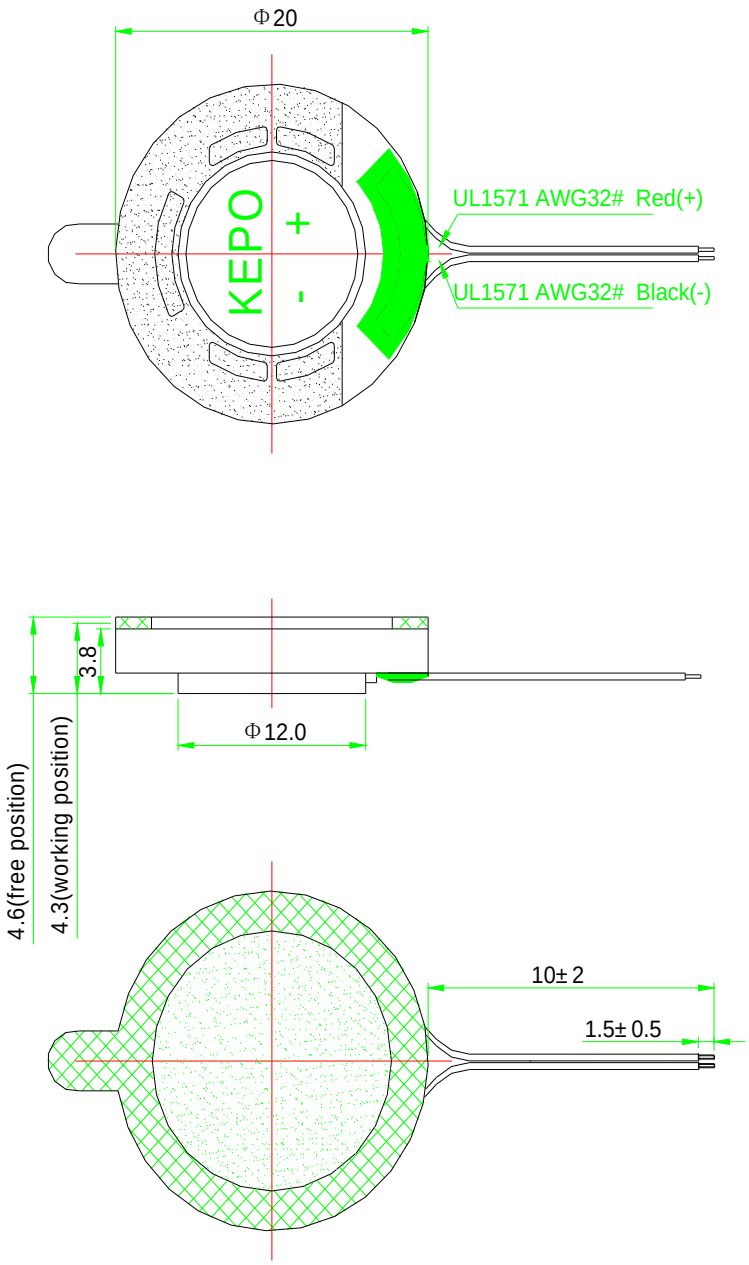

FIRST ANGLE PROJECTION

UNIT : mm

Tolerance : ±0.2

8. Packing

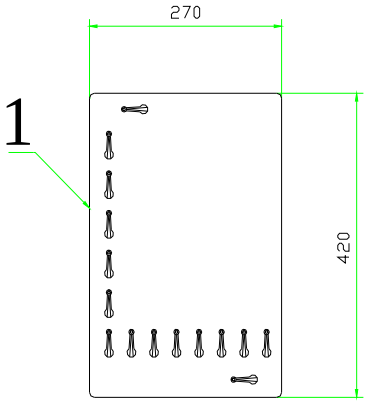

100Pcs

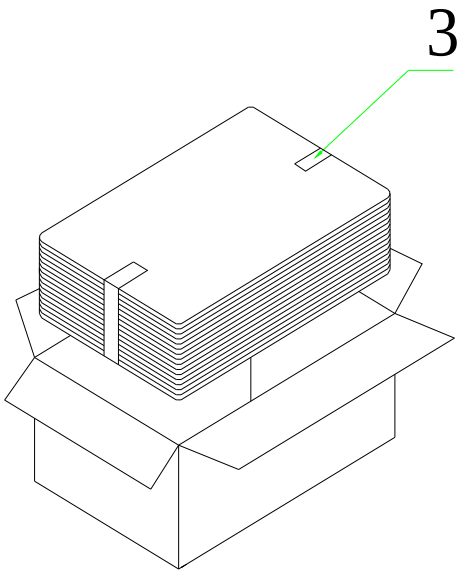

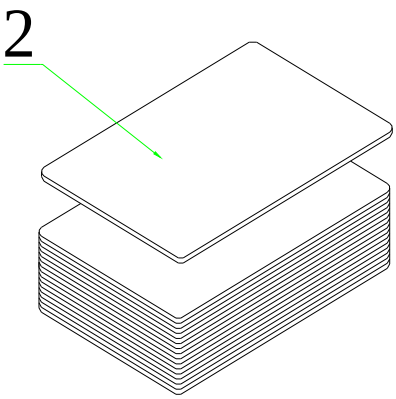

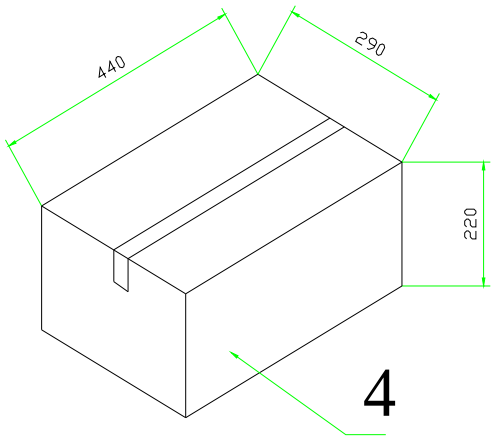

QTY: 2000Pcs

440 x290 x220

9. Revision

Rev. No.	DATE	PAGE	DESCRIPTION	BOM
1.0	2011-4-21		Primary	