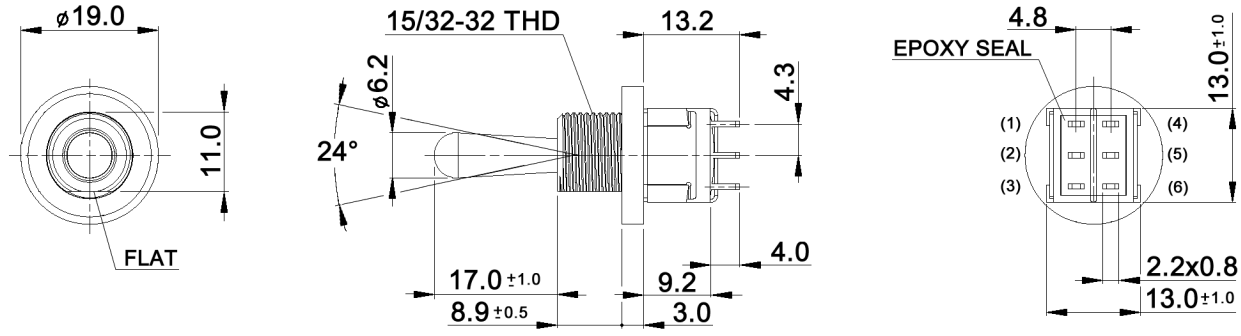

CONTACT ARRANGEMENT

code for x	function	toggle towards flat	toggle opposite to flat
N	On-On	1-2, 4-5	2-3, 5-6
R	Mom-On	1-2, 4-5	2-3, 5-6

code for x	function	toggle towards flat	toggle in center	toggle opposite to flat
P	On-Off-On	1-2, 4-5	open	2-3, 5-6
S	Mom-Off-Mom			
T	Mom-Off-On			
PA	On-On-On	1-2, 4-5	2-3, 4-5	2-3, 5-6
SA	Mom-On-Mom			
TA	Mom-On-On			

Specifications:

PANEL MOUNTING

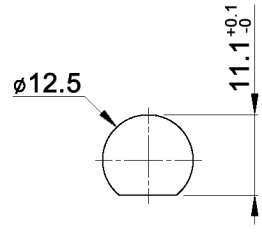

Contact rating:	3A, 250V AC / 6A, 125V AC 4A, 30V DC / 5A, 12V DC 6A, 6V DC
Contact resistance:	20mOhm max.
Insulation resistance:	1 000MOhm min. at 500V DC
Dielectric strength:	1 500V, 50Hz for the duration of 1 minute
Operating temperature:	-45°C to +140°C
Mechanical life:	min. 100 000 cycles
Soldering conditions:	hand-soldering: max.: 420°C, 3sec., 60W auto-soldering: max.: 270°C, 5sec.
Mounting instruction:	max. torque: 137Ncm
IP rating:	IP67
Material:	Terminal / contact: brass, silver plated Case: DAP Housing: stainless steel, CNS9265 Bushing: copper alloy, C3604BD nickel plated Actuator: copper alloy, C3604BD chrome plated
Included accessories:	1 pc. nut 15/32-32, nickel plated, 14mm wrench size 1 pc. tooth washer 1 pc. O-ring, silicone

RoHS-conform · 2002/95/EC

Tolerances: 0.00: ±0.25mm 0.0: ±0.40mm			Date	Name	MTW 206 x
			05/09	dr	
			knitter-switch	30 18 23	Page 1/1
Modifications	Date	Name			