THE INFORMATION CONTAINED HEREIN IS CONSIDERED "PROPRIETARY" TO BEL FUSE INC. AND SHALL NOT BE COPIED, REPRODUCED OR DISCLOSED WITHOUT THE WRITTEN APPROVAL OF BEL FUSE INC.

PATENTED:
THIS PRODUCT IS COVERED BY U.S. PATENT 5,736,910

COMPONENTS FOR A CONNECTED PLANET®

PRELIMINARY

DOCUMENT / PART NO.: SI-50246-F

TITLE : 10/100BT, SHIELDED

ISSUE	DESCRIPTION OF CHANGE	REVIEWED BY	APPROVED BY	ECN#
X0	INITIAL RELEASE	Liu Bain	Steve Weller	--

PAGE	1	2	3	--	--	--	--	--	--	--	--	--	--	--	--	--	--	--
REV.	X0	X0	X0	--	--	--	--	--	--	--	--	--	--	--	--	--	--	--
PAGE	--	--	--	--	--	--	--	--	--	--	--	--	--	--	C5078-F REV A0			
REV.	--	--	--	--	--	--	--	--	--	--	--	--	--	--	24-0256-F REV A0			

Downloaded from Arrow.com.

Downloaded from Arrow.com.

THE INFORMATION CONTAINED HEREIN IS CONSIDERED "PROPRIETARY" TO BEL FUSE INC. AND SHALL NOT BE COPIED, REPRODUCED OR DISCLOSED WITHOUT THE WRITTEN APPROVAL OF BEL FUSE INC.

RoHS

PRELIMINARY

ELECTRICAL SPECIFICATIONS:

1.0 TURNS RATIO: (P7–P6–P8) : (J3–J6) : 1CT : 1CT± 3%
(P1–P3–P2) : (J1–J2) : 1CT : 1CT ± 3%

2.0 INDUCTANCE: (P7–P8) : 350uH MIN. @ 0.1V, 100KHz, 8mA DC Bias
(P1–P2) : 350uH MIN. @ 0.1V, 100KHz, 8mA DC Bias

3.0 LEAKAGE INDUCTANCE: P7–P8 (WITH J6 AND J3 SHORT) : 0.3uH MAX. @ 1MHz
P1–P2 (WITH J2 AND J1 SHORT) : 0.3uH MAX. @ 1MHz

4.0 INTERWINDING CAPACITANCE: (P7,P6,P8) TO (J3,J6) : 30pF TYP @ 1MHz
(P1,P3,P2) TO (J1,J2) : 30pF TYP @ 1MHZ

5.0 DC RESISTANCE: (J6–J3)=(J2–J1) : 1.4 ohms Max.

6.0 RETURN LOSS: (P7–P8)=100 OHMS AND (P1–P2) =100 OHM REF.
1MHz TO 30MHz : –18dB MIN.
30MHz TO 60MHz : –(19–20 LOG (f/30MHz))
60MHz TO 80MHz : 12dB MIN.

NOTE: 100 OHMS CONNECTED TO (J2–J1) OR (J6–J3).

7.0 DIELECTRIC WITHSTAND: (J3, J6) TO (P7, P8) : 1500 VAC
(J1, J2) TO (P1,P2) : 1500 VAC

8.0 INSERTION LOSS: RS=RL=100 ohms
1–65MHz : –1 dB MAX

9.0 RISE TIME: RS=100 OHMS AND RL = 100 OHMS
OUTPUT VOLTAGE = 1 V peak : 3.0 nS MAX
PULSE WIDTH= 112nS : 3.0 nS MAX

10.0 CROSS TALK: 1–65MHz : –35 dB MIN

11.0 COMMON TO COMMON MODE ATTENUATION: 30MHz TO 100MHz : –30dB MAX
100MHz TO 130MHz : –20dB MAX

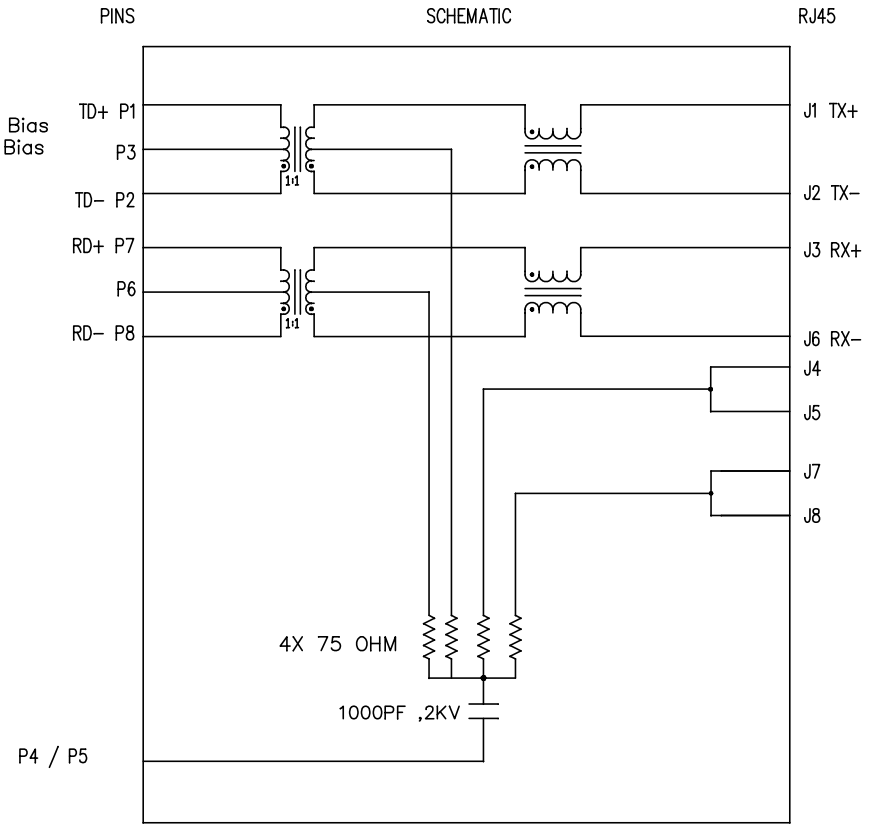

NOTES

1.0 PINS WITHOUT ELECTRICAL CONNECTION ARE OMITTED.

2.0 ALL RESISTORS ARE ±5% TOLERANCE.

ORIGINATED BY	DATE	TITLE	PART NO. / DRAWING NO.	STANDARD DIM. TOL. IN INCH		[ ] METRIC DIM. AS REFERENCE	
Zeng Xiao Chun	2012-02-15	MagJack® 10/100BT SHIELDED PATENTED	SI-50246-F	.X		UNIT : INCH [mm]	REV. : X0
DRAWN BY	DATE		FILE NAME	.XX		SCALE : N/A	SIZE : A4
Duan Jun	2012-02-15		SI-50246-F.DWG	.XXX	±0.005		PAGE : 2

bel COMPONENTS FOR A CONNECTED PLANET

This document is electronically generated. This is a controlled copy if used internally

THE INFORMATION CONTAINED HEREIN IS CONSIDERED "PROPRIETARY" TO BEL FUSE INC. AND SHALL NOT BE COPIED, REPRODUCED OR DISCLOSED WITHOUT THE WRITTEN APPROVAL OF BEL FUSE INC.

RoHS

PRELIMINARY

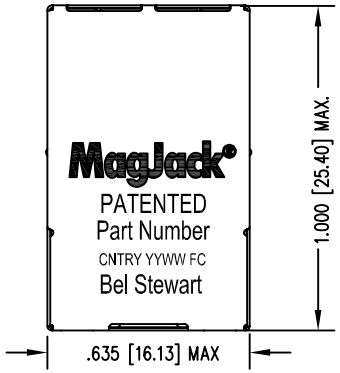

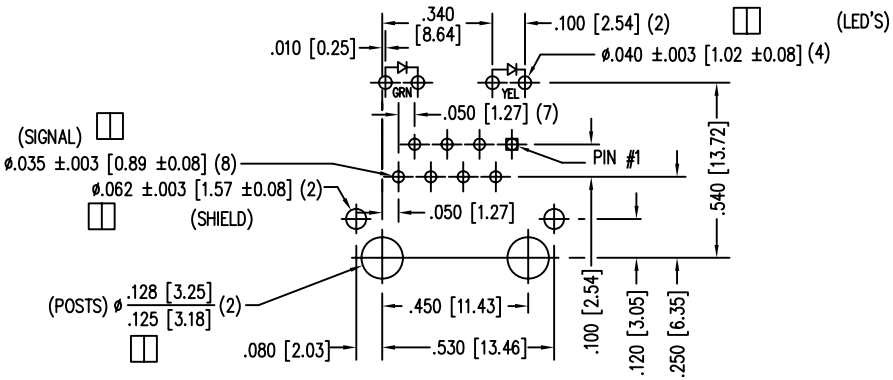

P.C.B. RECOMMENDED HOLE LAYOUT
SEEN FROM COMPONENT SIDE

ALL CENTERLINE DIMENSIONS ARE BASIC.

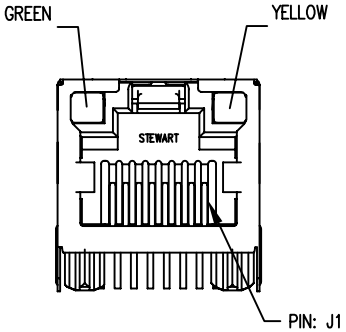

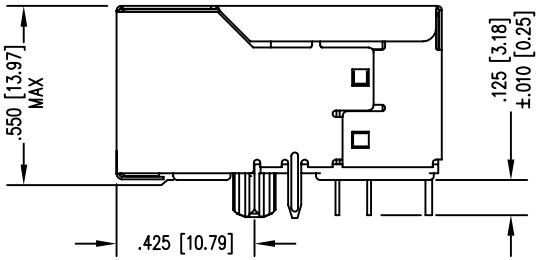

NOTES:

1. CONNECTOR MATERIALS:
   HOUSING: THERMOPLASTIC UL94 V-0
   CONTACT/SHIELD: COPPER ALLOY
   SHIELD PLATING: NICKEL OR TIN
   CONTACT PLATING: 50 MICRO-INCH SELECTIVE HARD GOLD PLATING OR EQUIVALENT IN CONTACT AREA
2. PIN NOT ELECTRICALLY CONNECTED MAYBE OMITTED. SEE ELECTRICAL DRAWING FOR OMITTED PINS.
3. TOLERANCES COMPLY WITH F.C.C. DIMENSION REQUIREMENTS.
4. ALL TOLERANCES NOT OTHERWISE SPECIFIED TO BE ±.005 [0.13]
5. RELOW AND WAVE SOLDER COMPATIBLE – PREHEAT 260°C, FOR 10 SECONDS MAX.

LED SPECIFICATION			
STANDARD LED	WAVELENGTH	FORWARD V (MAX)	* (TYP)
GREEN	565 nm	2.5 V	2.2 V
YELLOW	590 nm	2.5 V	2.1 V

*WITH A FORWARD CURRENT OF 20 mA (TYP)

ORIGINATED BY: Zeng Xiao Chun	DATE: 2012-02-15	TITLE: MagJack® 10/100BT SHIELDED PATENTED	PART NO. / DRAWING NO.: SI-50246-F	STANDARD DIM. TOL. IN INCH	[ ] METRIC DIM. AS REFERENCE
DRAWN BY: Duan Jun	DATE: 2012-02-15		FILE NAME: SI-50246-F.DWG	.X / .XX / .XXX ±0.005	UNIT : INCH [mm] REV. : X0
					SCALE : N/A SIZE : A4
					PAGE : 3

bel COMPONENTS FOR A CONNECTED PLANET

FM999185 REV C0

This document is electronically generated. This is a controlled copy if used internally

Downloaded from Arrow.com.