CAT.ES11-81A-UK

SMC

5 Port Solenoid Valve

Series SV

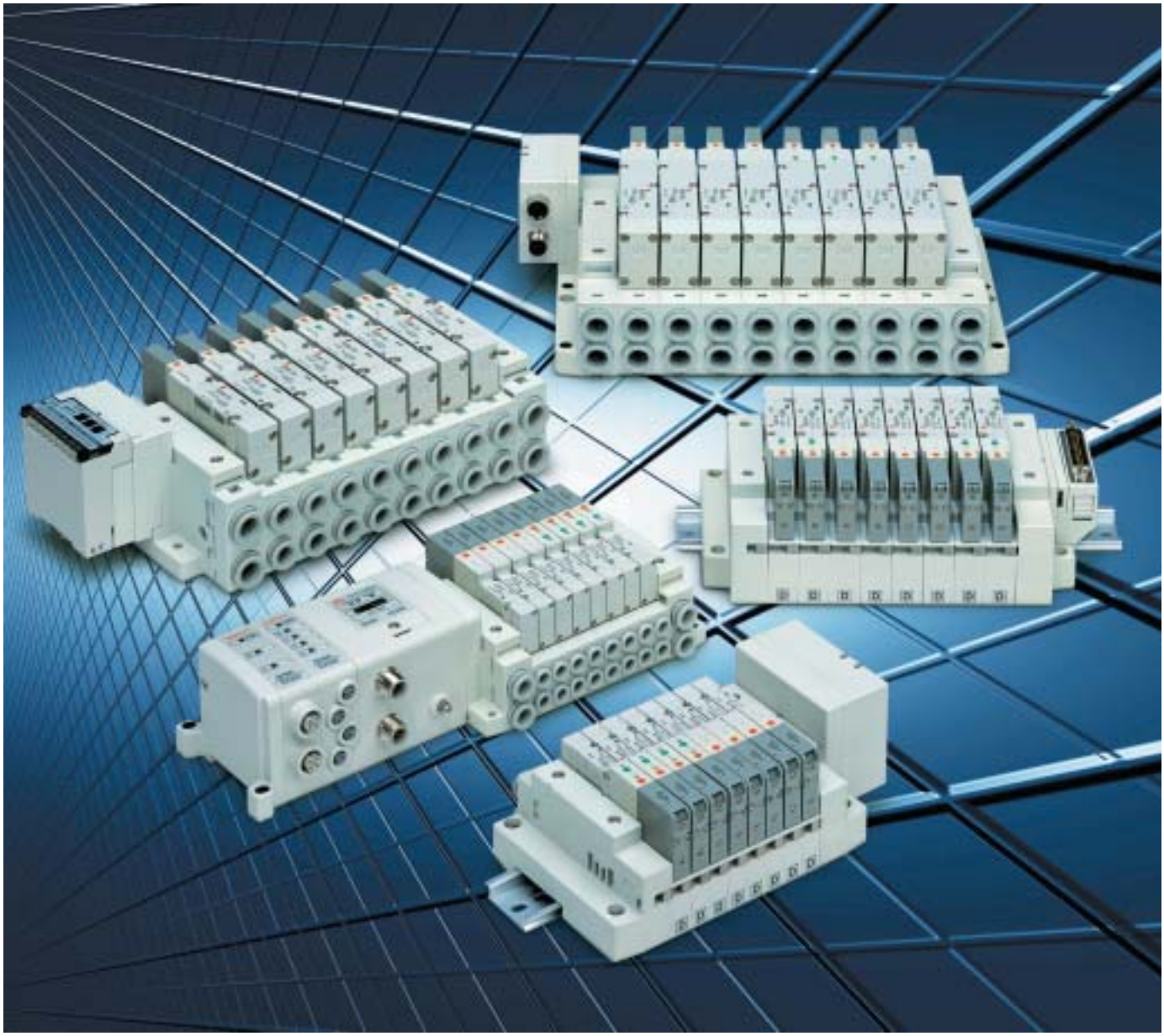

New Concept Connector Type Manifold
Series SV1000/2000/3000/4000

The use of multi-pin connectors to replace wiring inside manifold blocks provides flexibility when adding stations or changing manifold configuration.

The SV series employs a multi-connector instead of the conventional lead wires for internal manifold wiring. By connecting each block with a connector, changes to manifold stations are greatly simplified.

Connector wiring diagram

For both serial and parallel wiring, additional manifold blocks are sequentially assigned pins on the connector.
This makes it completely unnecessary to disassemble the connector unit.

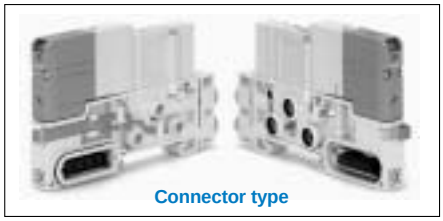
Connector type

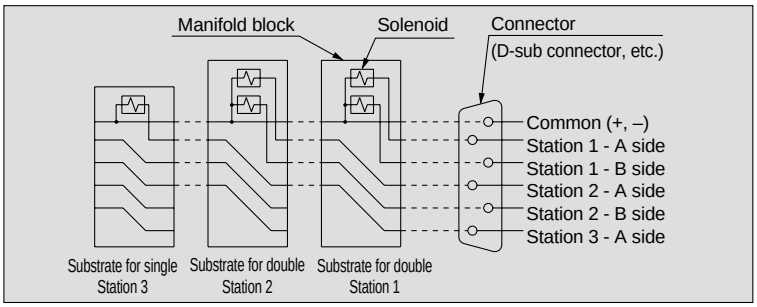

Cassette base type manifold (for SV1000/2000)

Cassette base type manifolds offer the ultimate in flexibility.
Manifold sections can be added using a simple release mechanism.

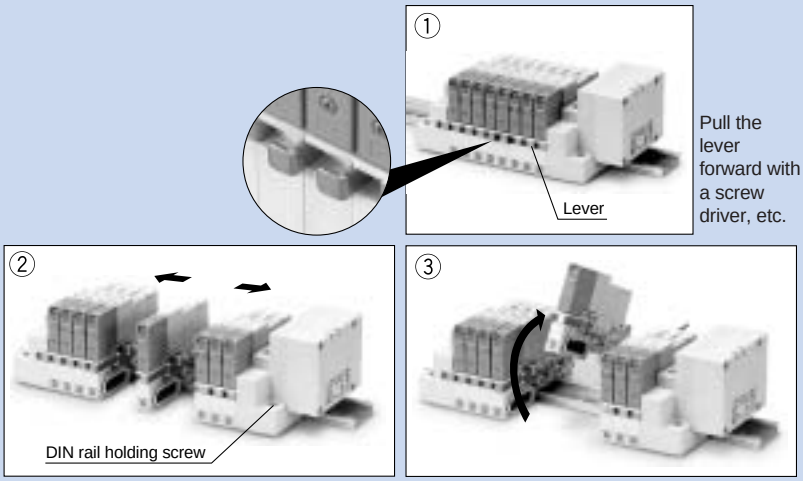

Loosen the DIN rail holding screws at both ends, and separate the manifold to the right and left.

Pull the valve up at the front.

Tie-rod base manifold (for SV1000/2000/3000/4000)

Conventional tie-rod base type manifolds are also available.
The use of 34 pin connectors allows up to 16 stations with double solenoids.

4 position dual 3 port valves available for series SV1000/2000

- Two 3 port valves built into a single valve body.
- A and B ports can be individually controlled.
- Three combinations are available: [N.C./N.C.], [N.O./N.O.] and [N.C./N.O.].
- Mixed mounting with 5 port valves is also possible.
- Labels are attached to indicate A and B side functions, using the same colour as the manual override.

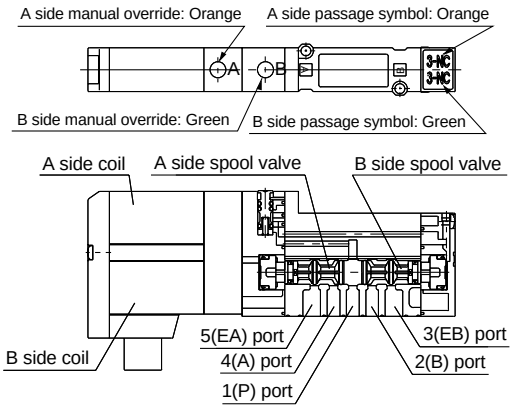

Model	A side	B side	JIS symbol
SV$^{1}_{2}$A00	N.C. valve	N.C. valve	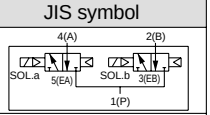
SV$^{1}_{2}$B00	N.O. valve	N.O. valve	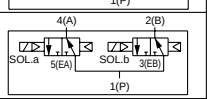
SV$^{1}_{2}$C00	N.C. valve	N.O. valve	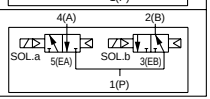

∗ External pilot specification is not available for 4 position dual 3 port valves.

SMC

NEW Serial options:

Accommodates gateway type serial wiring

Series EX500 gateway features:

- IP65 protection
- 128 I/O (64 inputs, 64 outputs)
- Controls up to 4 branches with 32 I/O per branch
- A single cable from the gateway provides both signal and power for each branch, eliminating the need for separate power connections for each manifold.

Series EX250 features:

Serial wiring with I/O unit Series EX250

- IP65 protection
- 64 I/O (32 inputs, 32 outputs)
- Double solenoid allows up to 16 stations (up to 32 solenoids).

Product is CE compliant

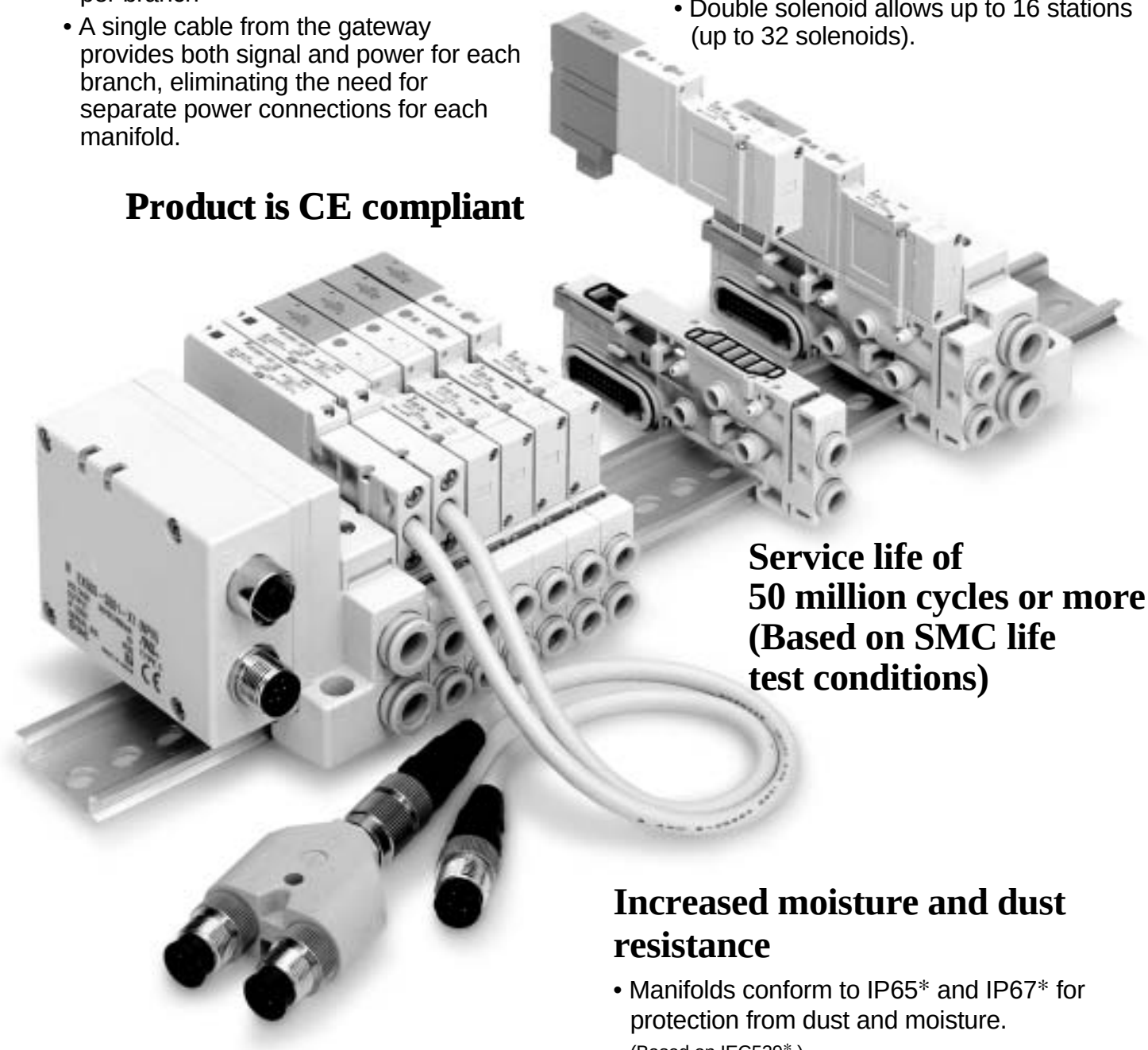

Service life of 50 million cycles or more (Based on SMC life test conditions)

Increased moisture and dust resistance

- Manifolds conform to IP65* and IP67* for protection from dust and moisture.
  (Based on IEC529*.)
  (Refer to the catalogue contents for details, as some types of connectors do not meet these standards.)

Power consumption: 0.6W
(Current: 25mA, 24VDC)

A relay output module is available for control of devices up to 110VAC, 3A.

Air Cylinder Drive Systems
Total Stroke Time and Speed at the End

Series SV1000

Applicable bore size: ø20, ø25, ø32, ø40

Applicable related components			
Solenoid valve	Silencer	Tubing	Speed controller
SV1□00	ANA1 -C08	T0604	AS2201F -01-06 AS2200-01
SV1□00	ANA1 -C08	T0604	AS2201F -01-06 AS2200-01
SV1□00	ANA1 -C08	T0604	AS2201F -01-06 AS2200-01
SV1□00	ANA1 -C08	T0604	AS2201F -02-06 AS2200-02

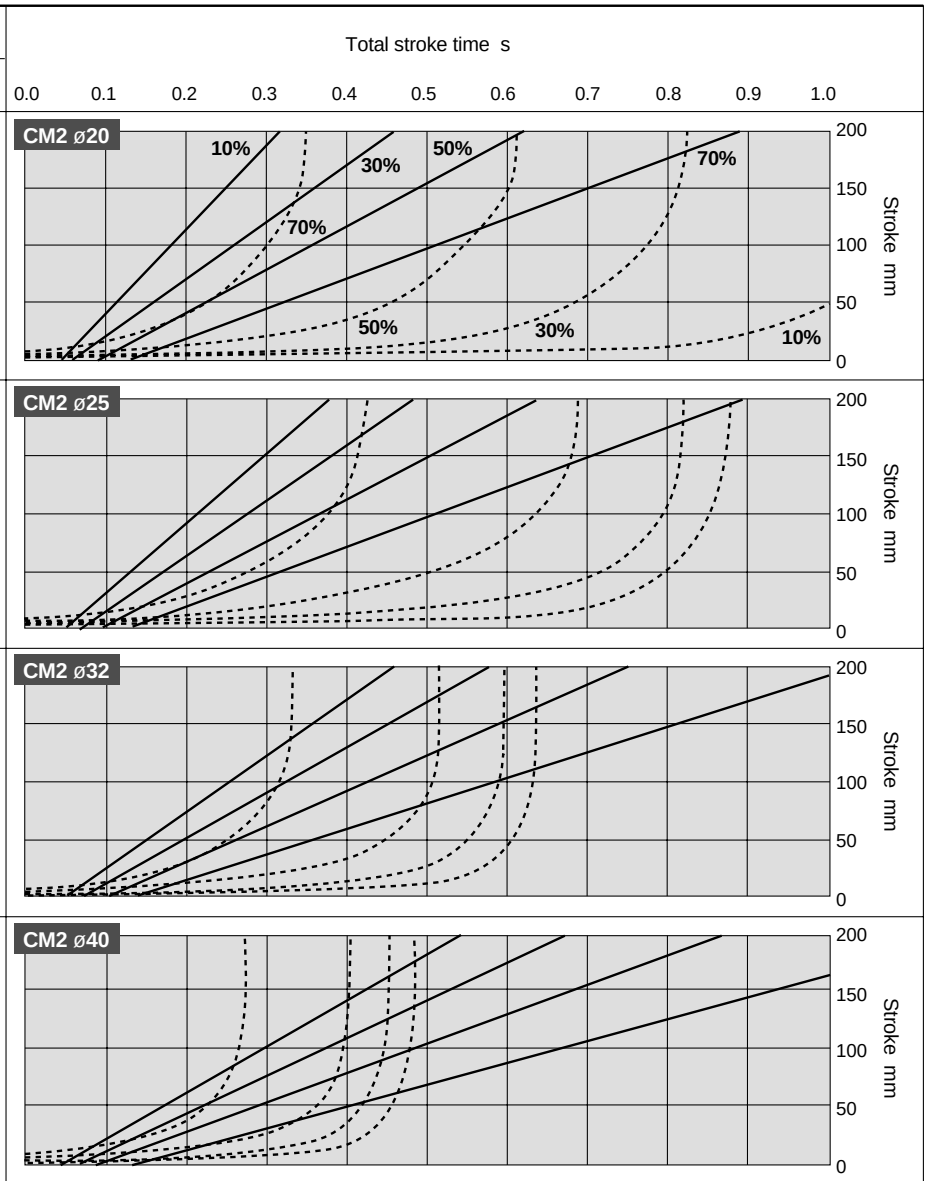

Applicable related components			
Solenoid valve	Silencer	Tubing	Speed controller

For details regarding different conditions, make determinations after using the SMC Model Selection Program - Pneumatic Cylinder Drive Systems.

Reading the graphs

These graphs show the total stroke time and speed at the end when a cylinder drive system is composed of the ideal components. The graphs above indicate the total stroke time and speed at the end with respect to various load ratios and strokes for each cylinder bore size.

Common conditions

Supply pressure	0.5MPa
Piping length	SV1000: 1m, SV2000/3000: 2m, SV4000: 3m
Cylinder direction	Vertical upward
Speed controller	Meter-out, Directly connected to cylinder, Needle fully open
Load ratio	{(Load weight)/(Theoretical output)} x 100%

Series SV2000

Applicable bore size: ø32, ø40, ø50, ø63

Applicable related components				Total stroke time s
Solenoid valve	Silencer	Tubing	Speed controller	0.0 0.2 0.4 0.6 0.8 1.0 1.2 1.4 1.6 1.8 2.0
SV2□00	ANA1 -C10	T0806	AS2201F -01-08 AS2200-01	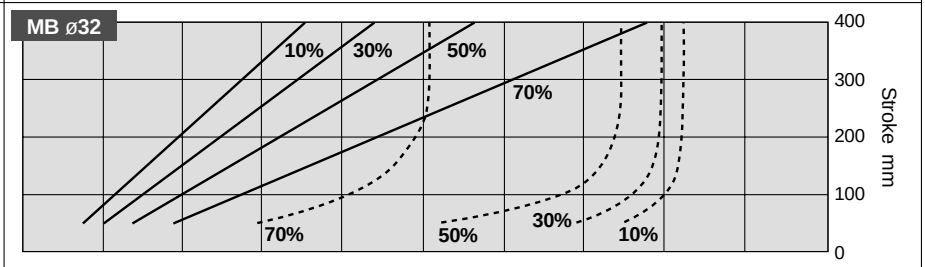
			AS2201F -02-08 AS2200-02	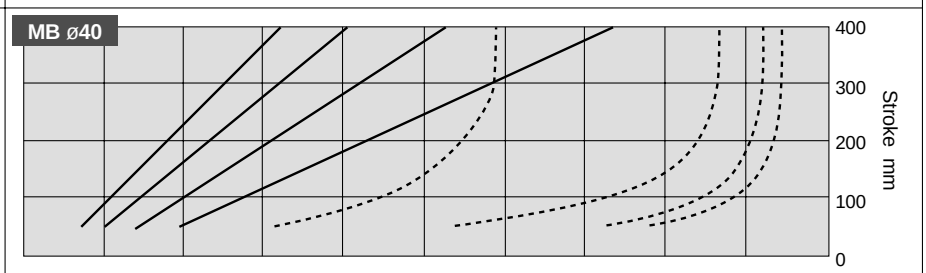
			AS3201F -02-08 AS3000-02	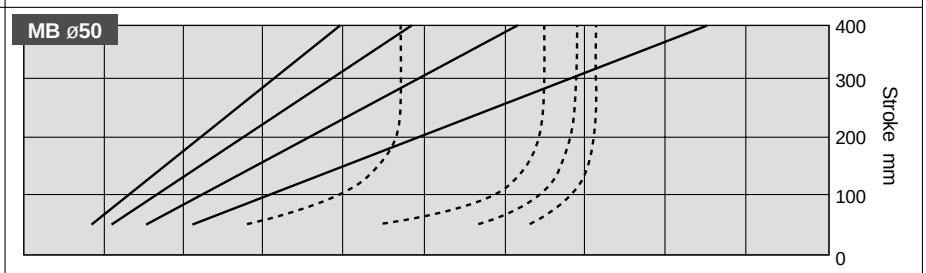
			AS4000-03	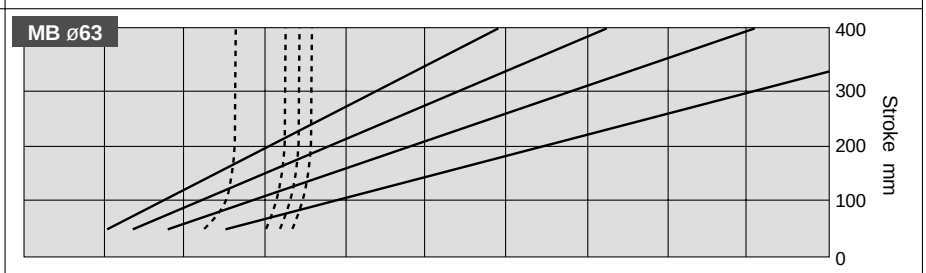
Solenoid valve	Silencer	Tubing	Speed controller	200 300 400 500 600 700 800 900 1000 1100 1200
Applicable related components				Speed at the end mm/s

For details regarding different conditions, make determinations after using the SMC Model Selection Program - Pneumatic Cylinder Drive Systems.

Example

Go to the chart for the bore size cylinder you are using (ø). To find the stroke time (t), follow arrow ① from your stroke length ("L") to the solid line representing the load ratio (d%) for the application then up to the stroke time (t). To find the ending cylinder speed (u), follow arrow ② from your stroke length ("L") to the dotted line representing the load ratio (d%) then down to the ending cylinder speed (u).

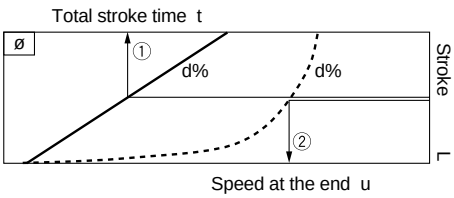

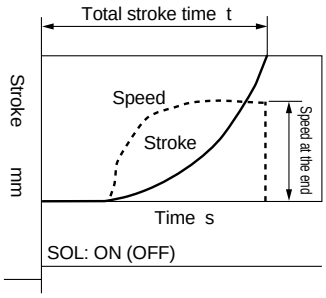

Air Cylinder Drive Systems
Total Stroke Time and Speed at the End

Series SV3000

Applicable bore size: ø50, ø63, ø80, ø100

Applicable related components			
Solenoid valve	Silencer	Tubing	Speed controller
SV3□00	ANA1 -C12	T1075	AS2201F -02-10
			AS3201F -03-10
			AS4000-03
			AS4000-04

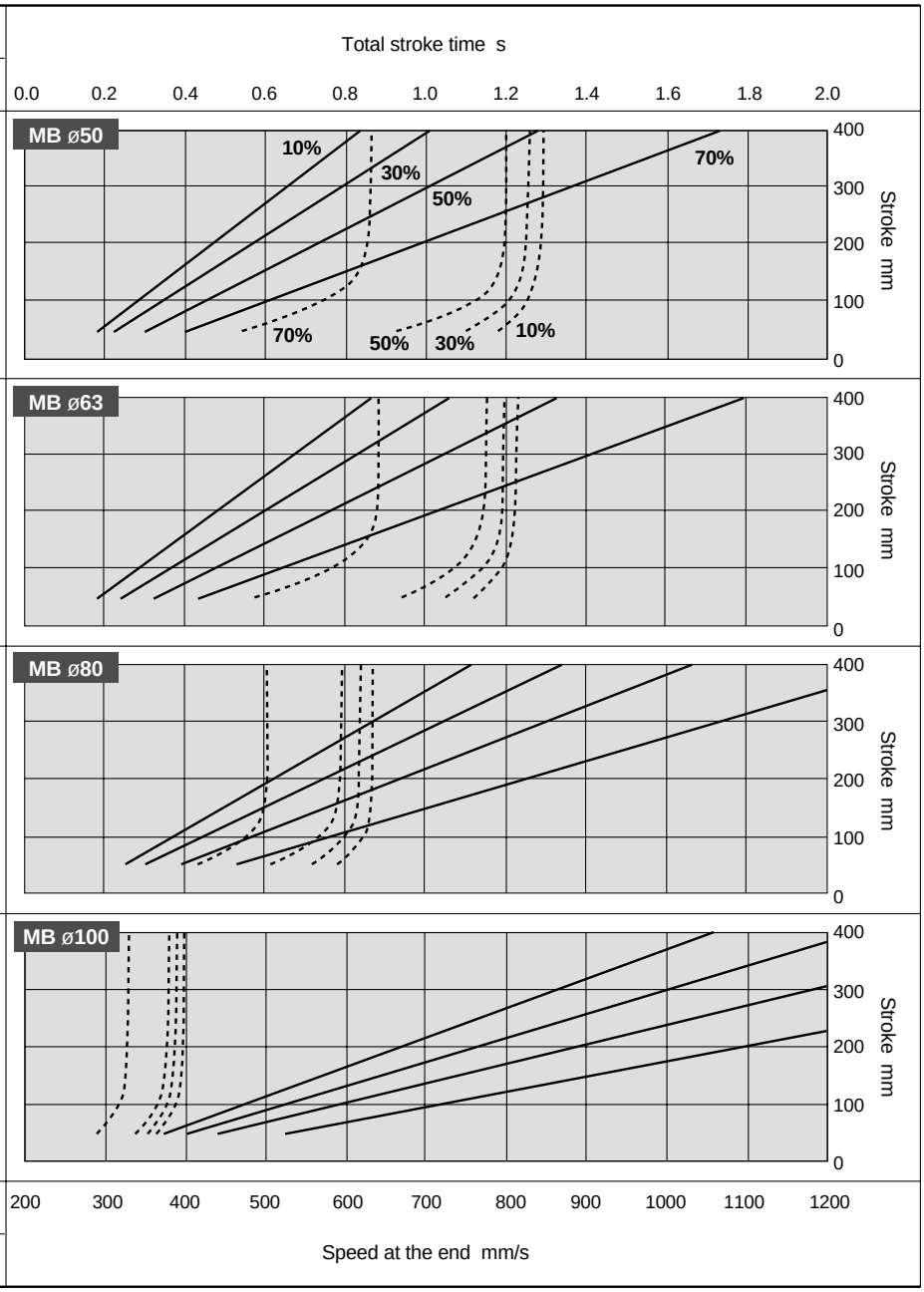

For details regarding different conditions, make determinations after using the SMC Model Selection Program - Pneumatic Cylinder Drive Systems.

Reading the graphs

These graphs show the total stroke time and speed at the end when a cylinder drive system is composed of the ideal components. The graphs above indicate the total stroke time and speed at the end with respect to various load ratios and strokes for each cylinder bore size.

Common conditions

Supply pressure	0.5MPa
Piping length	SV1000: 1m, SV2000/3000: 2m, SV4000: 3m
Cylinder direction	Vertical upward
Speed controller	Meter-out, Directly connected to cylinder, Needle fully open
Load ratio	{(Load weight)/(Theoretical output)} x 100%

Series SV4000

Applicable bore size: ø63, ø80, ø100, ø125

Applicable related components			
Solenoid valve	Silencer	Tubing	Speed controller
SV4□00	AN300 -KM12	T1209	AS3201F -02-12
			AS5000-02 AS420-02
			AS5000-02 AS420-02
			AS5000-02 AS420-02

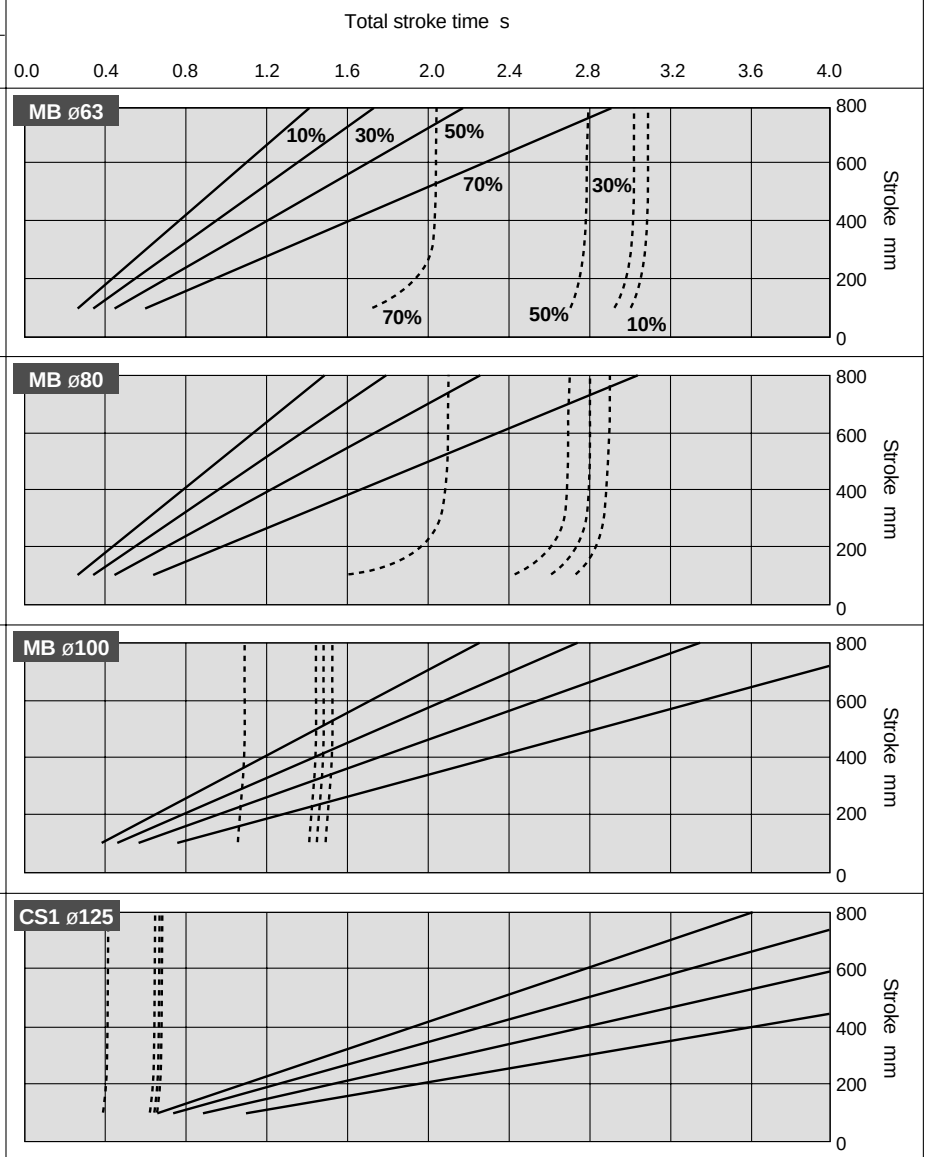

For details regarding different conditions, make determinations after using the SMC Model Selection Program - Pneumatic Cylinder Drive Systems.

Example

Go to the chart for the bore size cylinder you are using (ø). To find the stroke time (t), follow arrow ① from your stroke length ("L") to the solid line representing the load ratio (d%) for the application then up to the stroke time (t). To find the ending cylinder speed (u), follow arrow ② from your stroke length ("L") to the dotted line representing the load ratio (d%) then down to the ending cylinder speed (u).

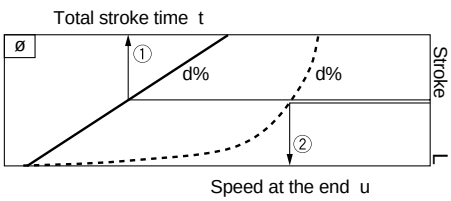

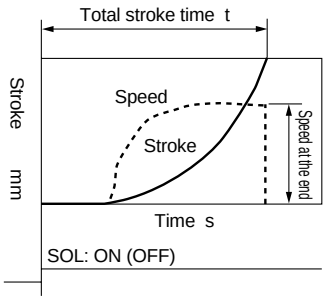

SMC

Table of Contents

Series SV Manifold Variations

Valve Manifold Common Specifications

Series SV

Cassette base

• Manifold stations can be easily changed by lever operation.

Specification

Applicable series		SV1000	SV2000
Manifold type		Stacking type cassette base manifold	
1 (P: SUP)/3, 5 (E: EXH) type		Common SUP, EXH	
Valve stations (maximum)		18 stations	20 stations
Max. number of solenoids		18 points	26 points
Port size	1(P)/3, 5 (E) port	C8, N9	C10, N11
	4(A)/2(B) port	C3, C4, C6 N1, N3, N7	C4, C6, C8 N3, N7, N9

Flow Characteristics

Model	Port size		Flow characteristics	
	1, 5, 3 (P/EA/EB)	4, 2 (A/B)	1→4, 2 (P→A, B)	4, 2→5, 3 (A, B→EA, EB)
			Nℓ/min	Nℓ/min
SS5V1-16	C8	C6	216	226
SS5V2-16	C10	C8	491	550

Note) Value is for manifold base with 5 stations and individually operated 2 position type.

Tie-rod base

• A 34 pin connector allows up to 16 stations with double solenoids.

Specification

Applicable series		SV1000	SV2000	SV3000	SV4000
Manifold type		Tie-rod base manifold			
1(P: SUP)/3, 5(E: EXH) type		Common SUP, EXH			
Valve stations (maximum)		20 stations			
Max. number of solenoids		32 points			
Port size	1(P)/3, 5(E) port	C8, N9	C10, N11	C12, N11	C12, N11, 03
	4(A)/2(B) port	C3, C4, C6 N1, N3, N7	C4, C6, C8 N3, N7, N9	C6, C8, C10 N7, N9, N11	C8, C10, C12 N9, N11, 02, 03

Flow Characteristics

Model	Port size		Flow characteristics	
	1, 5, 3 (P, EA, EB)	4, 2 (A, B)	1→4, 2(P→A, B)	4, 2→5, 3(A, B→EA, EB)
			Nℓ/min	Nℓ/min
SS5V1-10	C8	C6	236	275
SS5V2-10	C10	C8	452	471
SS5V3-10	C12	C10	893	913
SS5V4-10	C12	C12	1276	1570

Note) Value is for manifold base with 5 stations and individually operated 2 position type.

Series SV Solenoid Valve Specifications

Fluid		Air
Internal pilot operating pressure range MPa	2 position single 4 position dual 3 port valve	0.15 to 0.7
	2 position double	0.1 to 0.7
	3 position	0.2 to 0.7
External pilot operating pressure range MPa	Operating pressure range	–100kPa to 0.7
	2 position single, double 3 position	0.25 to 0.7
Ambient and fluid temperature °C		–10 to 50 (with no freezing)*
Maximum operating frequency Hz	2 position single, double 4 position dual 3 port valve	5
	3 position	3
Manual override		Non-locking push type
		Slotted locking type
Pilot exhaust method	Internal pilot	Main valve/Pilot valve common exhaust
	External pilot	Pilot valve individual exhaust
Lubrication		Not required
Mounting orientation		Unrestricted
Impact/Vibration resistance ms²		150/30 (8.3 to 2000Hz)
Enclosure		IP67 (based on IEC529)
Rated coil voltage		24VDC, 12VDC
Allowable voltage fluctuation		±10% of rated voltage
Power consumption W		0.6 (With light: 0.65)
Surge voltage suppressor		Zener diode
Indicator light		LED

Note) Impact resistance: No malfunction when tested with a drop tester in the axial direction and at a right angle to the main valve and armature, one time each in energized and de-energized states (at initial value).

Vibration resistance: No malfunction when tested with one sweep of 8.3 to 2000Hz in the axial direction and at a right angle to the main valve and armature, in both energized and de-energized states (at initial value).

* Refer to page 102.

JIS symbol

2 position single solenoid

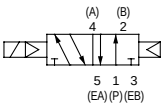

2 position double solenoid

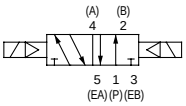

3 position closed centre

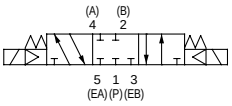

3 position exhaust centre

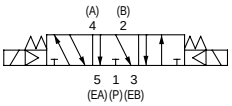

3 position pressure centre

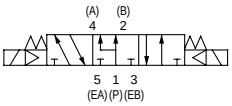

4 position dual 3 port valve: N.C./N.C.

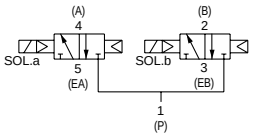

4 position dual 3 port valve: N.O./N.O.

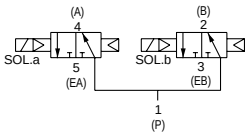

4 position dual 3 port valve: N.C./N.O.

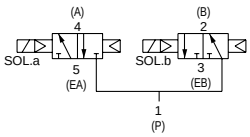

Response time

Type of actuation	Response time ms (at 0.5MPa)			
	SV1000	**SV2000**	**SV3000**	**SV4000**
2 position single	11 or less	25 or less	28 or less	40 or less
2 position double	10 or less	17 or less	26 or less	40 or less
3 position	18 or less	29 or less	32 or less	82 or less
4 position dual 3 port valve	15 or less	33 or less	—	—

Note) Based on JISB8375-1981 dynamic performance test (with coil temperature of 20°C, at rated voltage).

Weights

Series	Type of actuation	Weight g
SV1000	Single solenoid	66
	Double solenoid	71
	3 position	73
	4 position dual 3 port	71
SV2000	Single solenoid	74
	Double solenoid	78
	3 position	83
	4 position dual 3 port	78
SV3000	Single solenoid	99
	Double solenoid	102
	3 position	110
SV4000	Single solenoid	186
	Double solenoid	190
	3 position	211

Note) Weights of solenoid valve only.

Decentralized Serial Wiring

Series EX500

IP67 protection

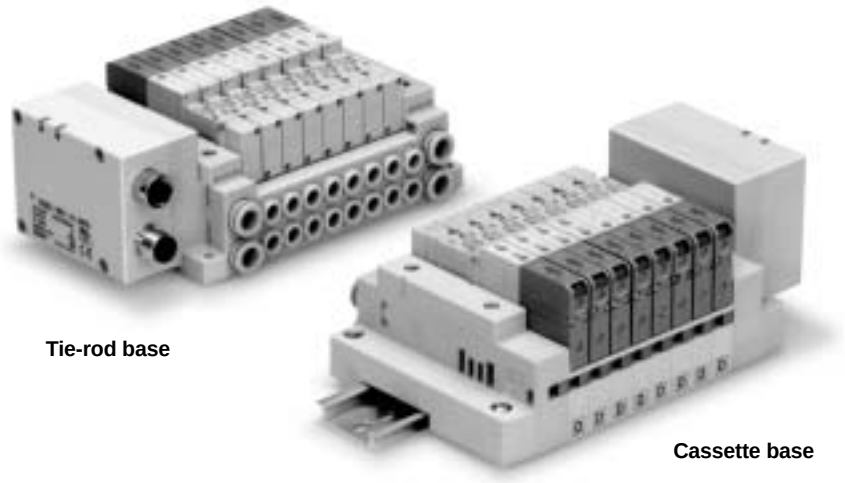

Tie-rod base

Cassette base

Applicable series	Cassette base manifold SV1000/SV2000
	Tie-rod base manifold SV1000/SV2000/SV3000/SV4000
	• Number of outputs: 16 • EX500 gateway unit communication specifications Remote I/O, DeviceNet, PROFIBUS-DP

Series EX500 Decentralized Serial System Configuration

A configuration of series EX500 serial system with series SV is shown below.

- **One gateway unit can be configured with manifold valves (outputs) and input unit manifolds (inputs) for up to 16 inputs and outputs per branch, with a maximum of four branches. (Maximum of 64 outputs and 64 inputs)**

Series EX500 Decentralized Serial System Configuration

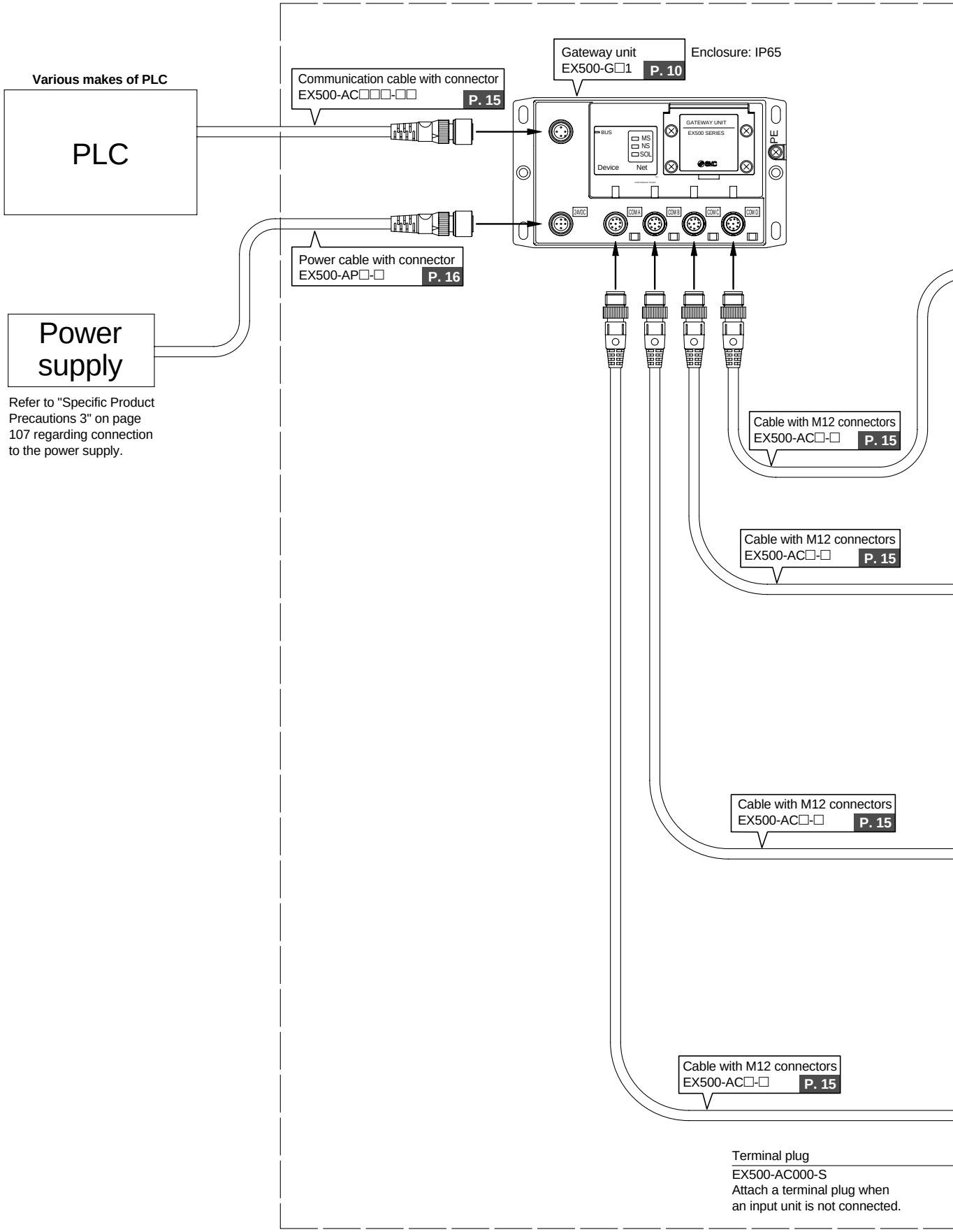

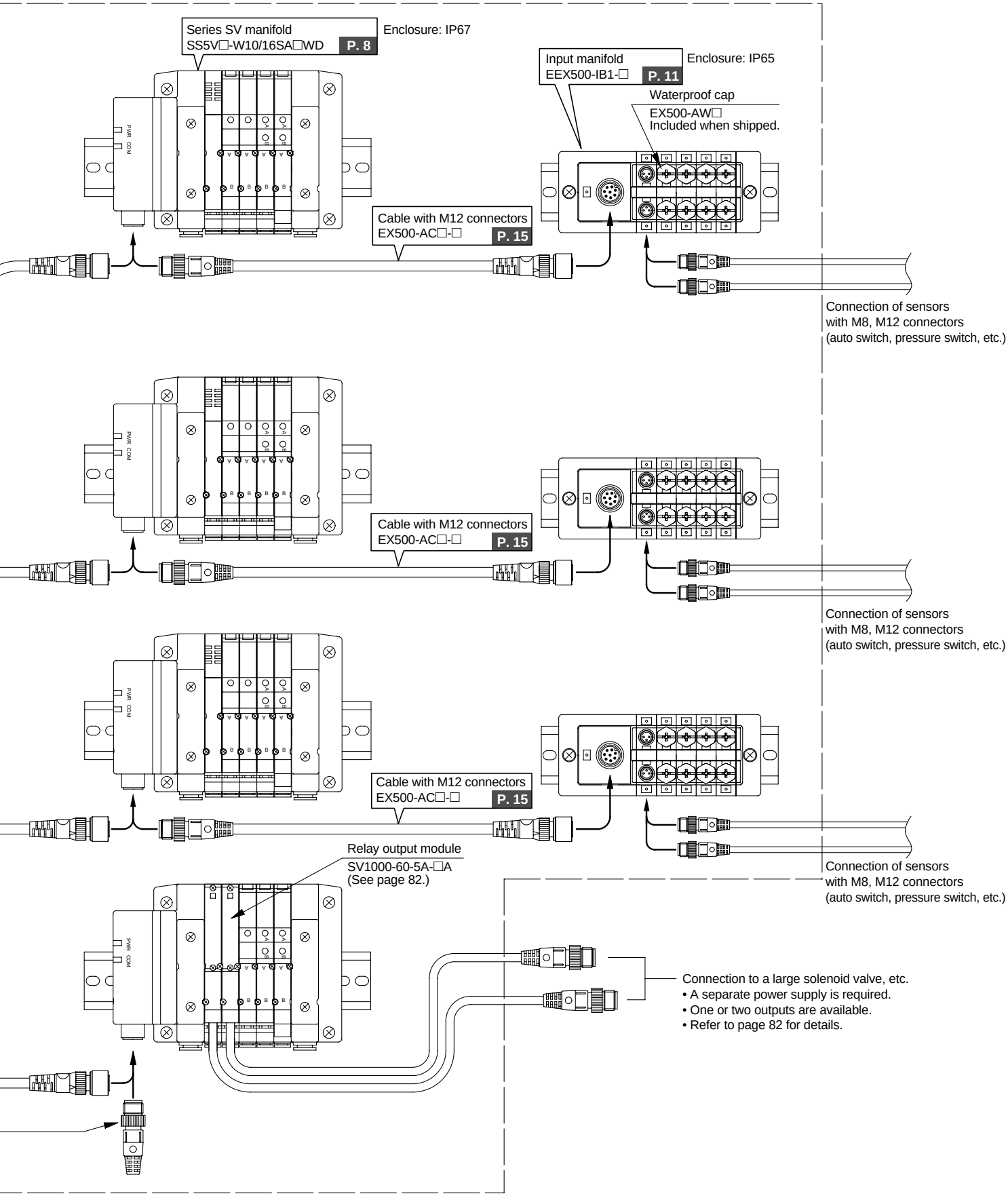
Series SV manifold
SS5V□-W10/16SA□WD
P. 8
Enclosure: IP67
Input manifold
EEX500-IB1-□
P. 11
Enclosure: IP65
Waterproof cap
EX500-AW□
Included when shipped.
Cable with M12 connectors
EX500-AC□-□
P. 15
Connection of sensors
with M8, M12 connectors
(auto switch, pressure switch, etc.)
Cable with M12 connectors
EX500-AC□-□
P. 15
Connection of sensors
with M8, M12 connectors
(auto switch, pressure switch, etc.)
Cable with M12 connectors
EX500-AC□-□
P. 15
Connection of sensors
with M8, M12 connectors
(auto switch, pressure switch, etc.)
Relay output module
SV1000-60-5A-□A
(See page 82.)
Connection to a large solenoid valve, etc.
• A separate power supply is required.
• One or two outputs are available.
• Refer to page 82 for details.

EX500
Decentralized Serial Wiring
Series SV

How to Order

Mounting

Nil	Direct mount	
D	DIN rail mount (with DIN rail)	
D0 Note)	DIN rail mount (without DIN rail)	
D3	For 3 stations	When a DIN rail longer than the specified stations is required. (Specify a rail longer than the standard length.)
⋮	⋮	
D16	For 16 stations	

Note) In case of D0, only DIN rail fittings are attached.

Series

1	SV1000
2	SV2000
3	SV3000
4	SV4000

• Tie-rod base

SS5V 1 – W 10S A1W D – 05 U □ – □ – □

• Cassette base

SS5V 1 – W 16S A1W D – 05 U □ – □ – □

Series

1	SV1000
2	SV2000

Enclosure
IP67 specification

SI unit specification

A1W	For remote I/O
A2W	For DeviceNet/ PROFIBUS-DP
0	Without SI unit

DIN rail length

Nil	Standard length	
3	For 3 stations	Specify a rail longer than the standard length.
⋮	⋮	
16	For 16 stations	

Valve stations

Symbol	Stations	Note
02	2 stations	Note 1) Double wiring specification
⋮	⋮	
08	8 stations	
02	2 stations	Note 2) Specified layout (Up to 16 solenoids possible.)
⋮	⋮	
16	16 stations	

Note 1) Double wiring specification: Single, double and 3 position solenoid valves can be used on all manifold stations.
Use of a single solenoid will result in an unused control signal. If this is not desired, order with a specified layout.

Note 2) Specified layout: Indicate wiring specifications on a manifold specification sheet.
(Note that double and 3 position valves cannot be used where single solenoid wiring has been specified.)

P, E port position

U	U side (2 to 10 stations)
D	D side (2 to 10 stations)
B	Both sides (2 to 16 stations)

Supply/Exhaust block assembly specification

Nil	Internal pilot specification
S*	Internal pilot/Built-in silencer
R	External pilot specification
RS*	External pilot/Built-in silencer

* When the built-in silencer type is used, keep the exhaust port from coming in direct contact with water or other liquids.

A, B port size (metric)

Symbol	A, B port	P, E port	Applicable series
C3	ø3.2 One-touch fitting	ø8 One-touch fitting	SV1000
C4	ø4 One-touch fitting		
C6	ø6 One-touch fitting		
C4	ø4 One-touch fitting	ø10 One-touch fitting	SV2000
C6	ø6 One-touch fitting		
C8	ø8 One-touch fitting		
C6	ø6 One-touch fitting	ø12 One-touch fitting	SV3000
C8	ø8 One-touch fitting		
C10	ø10 One-touch fitting		
C8	ø8 One-touch fitting	ø12 One-touch fitting	SV4000
C10	ø10 One-touch fitting		
C12	ø12 One-touch fitting		
02	Rc 1/4	Rc 3/8	
03	Rc 3/8		
02F	G 1/4	G 3/8	
03F	G 3/8		
M	A, B ports mixed		

A, B port size (inch)

Symbol	A, B port	P, E port	Applicable series
N1	ø1/8" One-touch fitting	ø5/16" One-touch fitting	SV1000
N3	ø5/32" One-touch fitting		
N7	ø1/4" One-touch fitting		
N3	ø5/32" One-touch fitting	ø3/8" One-touch fitting	SV2000
N7	ø1/4" One-touch fitting		
N9	ø5/16" One-touch fitting		
N7	ø1/4" One-touch fitting	ø3/8" One-touch fitting	SV3000
N9	ø5/16" One-touch fitting		
N11	ø3/8" One-touch fitting		
N9	ø5/16" One-touch fitting	ø3/8" One-touch fitting	SV4000
N11	ø3/8" One-touch fitting		
02N	NPT 1/4	NPT 3/8	
03N	NPT 3/8		
02T	NPTF 1/4	NPTF 3/8	
03T	NPTF 3/8		
M	A, B ports mixed		

* In case of mixed specification (M), indicate separately on a manifold specification sheet.

How to Order Manifold Assemblies (Order Example)

Example (SV1000)

Manifold
SS5V1-W16SA1WD-06B-C6 (1 set)

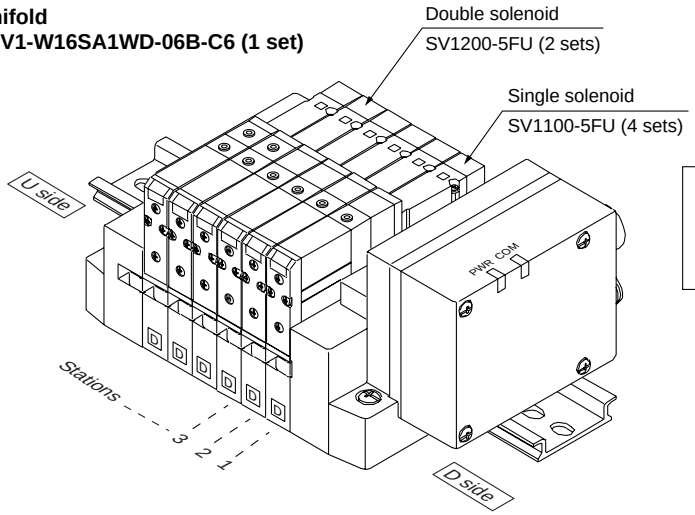

SS5V1-W16SA1WD-06B-C6 …… 1 set (manifold part no.)
∗ SV1100-5FU …… 4 sets (single solenoid part no.)
∗ SV1200-5FU …… 2 sets (double solenoid part no.)

How to Order Solenoid Valves

SV 1 1 0 0 □ □ — 5 F □ □ — □

Note) Available with manifold block for station additions. Refer to pages 77 and 81.

Series

1	SV1000
2	SV2000
3	SV3000
4	SV4000

Type of actuation

1	2 position single solenoid
2	2 position double solenoid
3	3 position closed center
4	3 position exhaust center
5	3 position pressure center
A	4 position dual 3 port valve: N.C./N.C.
B	4 position dual 3 port valve: N.O./N.O.
C	4 position dual 3 port valve: N.C./N.O.

∗ 4 position dual 3 port valves are applicable to series SV1000 and SV2000 only.

Pilot specification

Nil	Internal pilot
R	External pilot

∗ External pilot specification is not available for 4 position dual 3 port valves.

Back pressure check valve

Nil	None
K	Built-in

∗ Built-in back pressure check valve type is applicable to series SV1000 only.
∗ Back pressure check valve is not available for 3 position closed center and 3 position pressure center.
∗ Flow rate with the built-in back pressure check valve is reduced approximately 20%.

Rated voltage

5	24VDC

Manual override

Nil: Non-locking push type	**D:** Slotted locking type

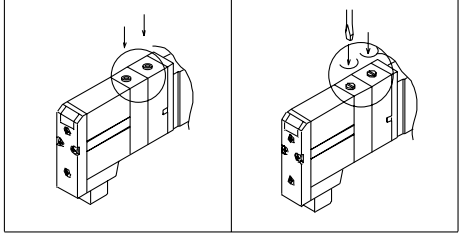

Light/Surge voltage suppressor

U	With light and surge voltage suppressor
R	With surge voltage suppressor

Gateway (GW) Unit

Specifications

Model	EX500-GAB1-X1	EX500-GDN1	EX500-GPR1
Applicable PLC/Communication protocol	Rockwell Automation PLC	DeviceNet Release 2.0	PROFIBUS-DP
Communication speed	57.6Kbit/sec, 115.2Kbit/sec 230.4Kbit/sec	125Kbit/sec, 250Kbit/sec 500Kbit/sec	9.6/19.2/93.75/187.5/500Kbit/sec 1.5/3/6/12Mbit/sec
Rated voltage	24VDC		
Power supply voltage range	Input and control unit power supply: 24VDC ±10% Solenoid valve power supply: 24VDC +10%/–5% (power drop warning at approx. 20V)		
Current consumption	200mA or less		
Number of inputs/outputs	Maximum 64 inputs/64 outputs		
Number of input/output branches	4 branches (16 inputs/16 outputs per branch)		
Branch cable	8 core heavy duty cable		
Branch cable length	5m or less (total extension 10m or less)		
Communication connector	M12 connector (8 pins, socket)		
Power connector	M12 connector (5 pins, plug)		
Ambient operating temperature/humidity	+5°C to +45°C/35% to 85%RH (no condensation)		
Enclosure	IP65		
Applicable standard	UL, CSA, CE		
Weight g	470		

∗ Communication cables and connectors are sold separately.
Refer to options on page 15.

How to Order

EX500 – G DN 1 [ ]

Communication protocol

DN	DeviceNet
PR	PROFIBUS-DP
AB	Remote I/O (RIO)

Applicable GW unit

Nil	DeviceNet PROFIBUS-DP
-X1	Remote I/O (RIO)

Dimensions

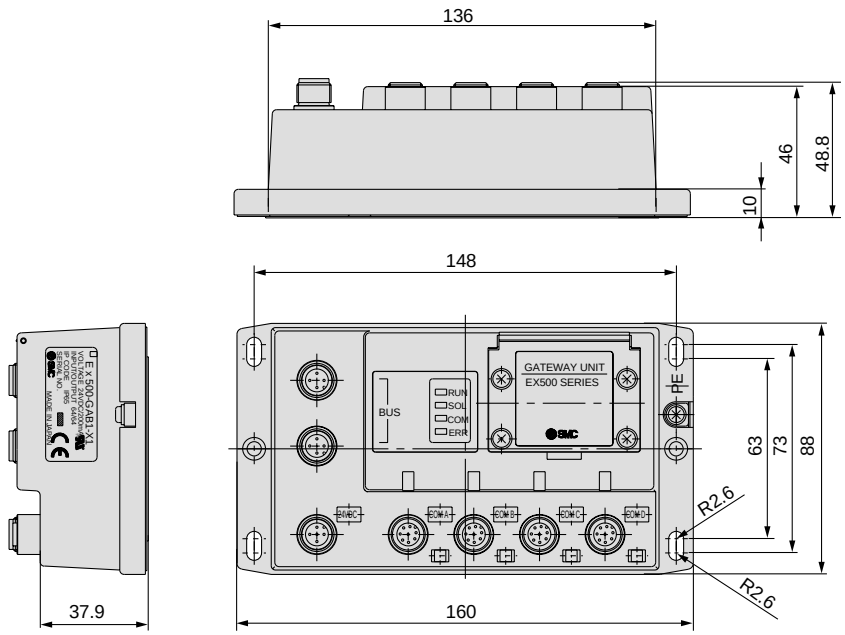

Input unit manifold

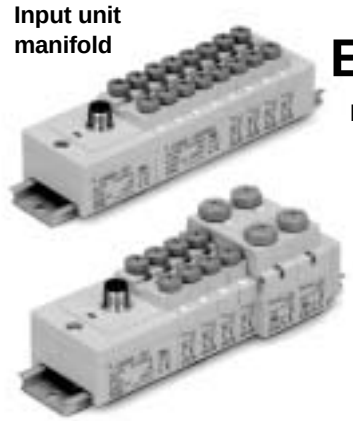

How to Order Input Manifolds

EEX500 – IB1 – E 8 ☐

Input unit specification

Connector type

E	M8 connector
T	M12 connector
M	M8, M12 mixed

Stations

1	1 station
⋮	⋮
8	8 stations

Applicable GW unit

Nil	DeviceNet PROFIBUS-DP
-X1	Remote I/O (RIO)

How to Order Input Blocks

EX500 – IE 1 ☐

Block type

1	M8 connector, PNP specification
2	M8 connector, NPN specification
3	M12 connector, PNP specification
4	M12 connector, NPN specification
5	8 point integrated type, M8 connector, PNP specification
6	8 point integrated type, M8 connector, NPN specification

Applicable GW unit

Nil	DeviceNet PROFIBUS-DP
-X1	Remote I/O (RIO)

Input Unit Specifications

Connection block	Current source type input block (PNP input block) or Current sink type input block (NPN input block)
Communication connector	M12 connector (8 pins, plug)
Number of connection blocks	Maximum 8 blocks
Block supply voltage	24VDC
Block supply current	0.65A maximum
Current consumption	100mA or less (at rated voltage)
Short circuit protection	Operates at 1ATyp. (power supply cut) GW unit reset by turning power OFF and back ON.
Enclosure	IP65
Weight g Note)	100 (Input unit + End block)

Note) Since the DIN rail weight is not included, confirm the DIN rail length being used on page 13, and add the weight found in the DIN rail dimension table on page 85.

Input Block Specifications

Applicable sensor	Current source type (PNP output) or Current sink type (NPN output)
Sensor connector	M8 connector (3 pins) or, M12 connector (4 pins)
Number of inputs	2 inputs/8 inputs (M8 only)
Rated voltage	24VDC
Indication	Green LED
Insulation	None
Sensor supply current	Maximum 30mA/Sensor
Enclosure	IP65
Weight g	[For M8: 20] [For M12: 40] [8 point integrated type, for M8: 55]

How to Order Input Unit Manifolds [Order Example]

When ordering an input unit manifold, enter the Input manifold part no. + Input block part no. together.
The Input unit, End block and DIN rail are included in the input manifold. Refer to the indications below.

Block part no. entry
Unit side
↓
End block side

Example 1) M8 input block only

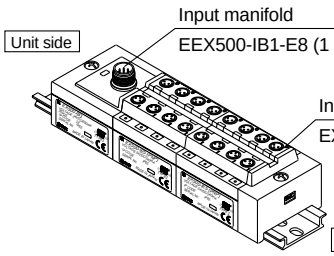

EEX500-IB1-E8 … 1 set
∗EX500-IE5 …….. 2 sets

Example 2) M12 input block only

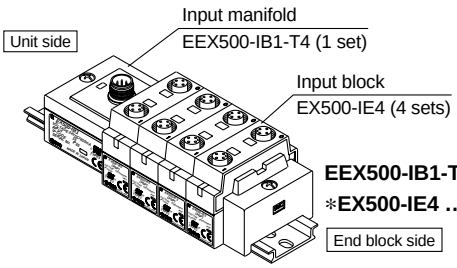

EEX500-IB1-T4 … 1 set
∗EX500-IE4 …….. 4 sets

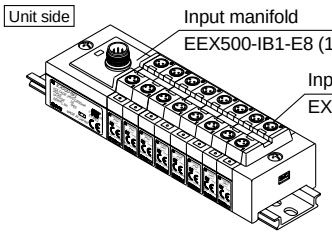

EEX500-IB1-E8 … 1 set
∗EX500-IE1 …….. 8 sets

Example 3) M8 and M12 mixed

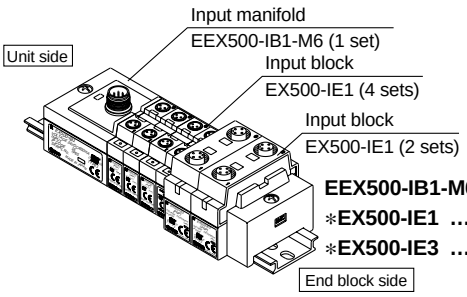

EEX500-IB1-M6 … 1 set
∗EX500-IE1 …….. 4 sets
∗EX500-IE3 …….. 2 sets

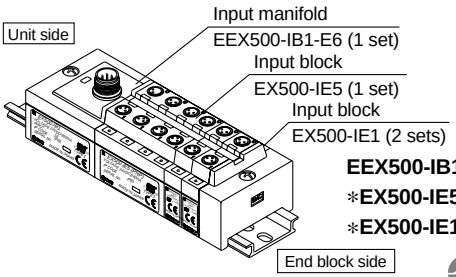

EEX500-IB1-E6 … 1 set
∗EX500-IE5 …… 1 set
∗EX500-IE1 …… 2 sets

Note) • Since the 8 point integrated type input block is equivalent to the length of four stations on an M8 input block, pay attention to the number of stations on an input manifold.
• When an input block layout becomes complicated, indicate on an input unit manifold specification sheet.

Input Unit Manifold Exploded View

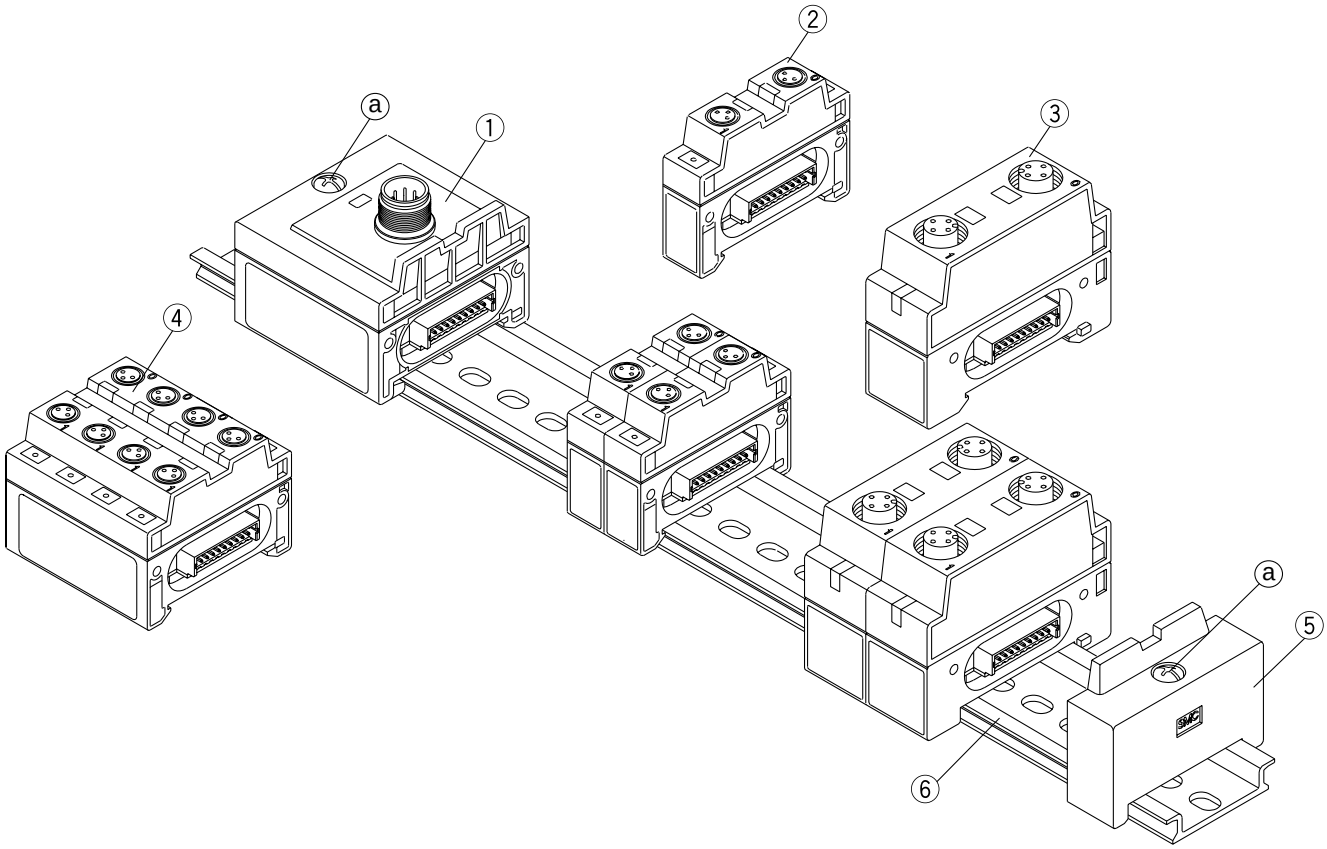

Parts list

No.	Description	Part no.		Note
		For standard	For RIO	
1	**Input unit**	EX500-IB1	EX500-IB1-X1	
2	**Input block (M8 connector)**	EX500-IE□	EX500-IE□-X1	PNP specifications ... □: 1, NPN specifications ... □: 2
3	**Input block (M12 connector)**	EX500-IE□	EX500-IE□-X1	PNP specifications ... □: 3, NPN specifications ... □: 4
4	**8 input block (M8 connector)**	EX500-IE□	EX500-IE□-X1	PNP specifications ... □: 5, NPN specifications ... □: 6
5	**End block**	EX500-EB1		
6	**DIN rail**	VZ1000-11-1-□		□: Length (Refer to page 85.)

How to add input block stations

1. Loosen the screws ⓐ (2 places) that are holding the end blocks.
2. Separate the blocks at the locations where stations are to be added.
3. Attach the additional blocks to the DIN rail, and connect the blocks so that they fit together securely.
4. While holding the blocks together so that there are no gaps between them, secure them to the DIN rail by tightening the screws ⓐ.
   Note: Be sure to tighten the screws with the prescribed tightening torque. (0.6N·m)

Input Unit Manifold Dimensions

Input block (M8) only

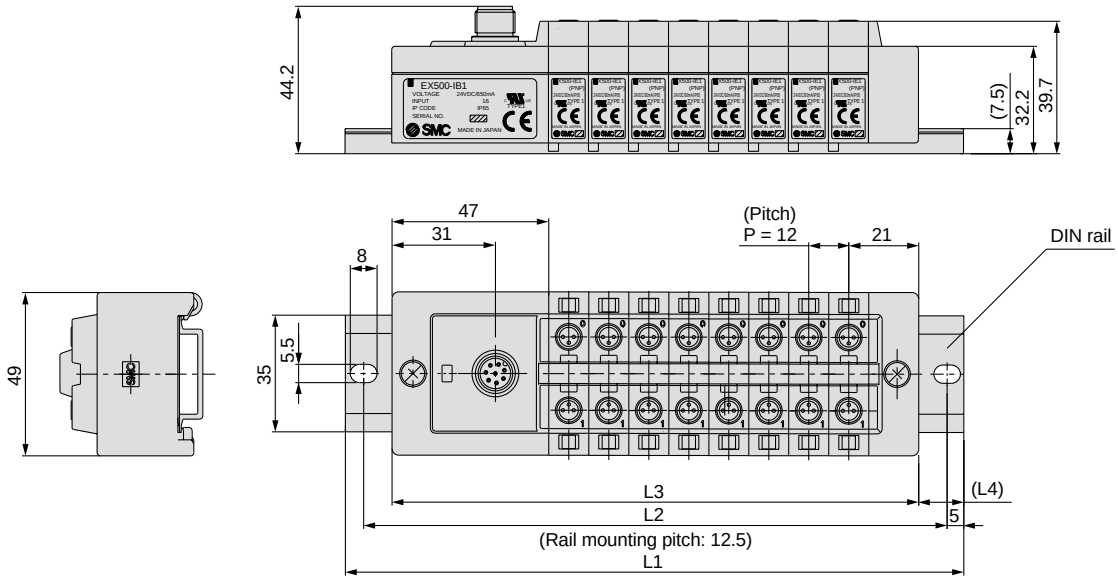

(mm)

Stations	1	2	3	4	5	6	7	8
Rail length L1	98	110.5	123	135.5	148	160.5	173	185.5
Mounting pitch L2	87.5	100	112.5	125	137.5	150	162.5	175
Manifold length L3	74	86	98	110	122	134	146	158
L4	12	12	12.5	12.5	13	13	13.5	13.5

Input block (M12) only

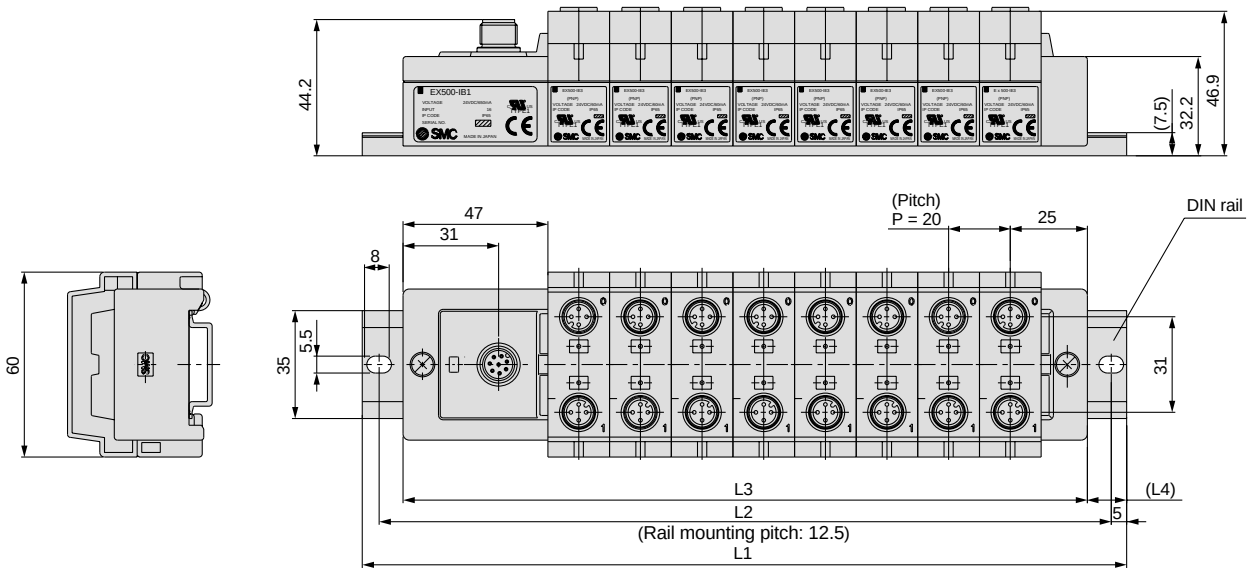

(mm)

Stations	1	2	3	4	5	6	7	8
Rail length L1	110.5	123	148	173	185.5	210.5	223	248
Mounting pitch L2	100	112.5	137.5	162.5	175	200	212.5	237.5
Manifold length L3	82	102	122	142	162	182	202	222
L4	12	12	12.5	12.5	13	13	13.5	13.5

Refer to page 3 for valve specifications.

How to Order SI Unit

EX500 – S001 [ ]

Applicable GW unit

Nil	DeviceNet PROFIBUS-DP
-X1	Remote I/O (RIO)

Specifications

Connection block	Solenoid valve (single, double) Relay output module (1 output, 2 outputs)
Communication connector	M12 connector (8 pins, plug, socket)
Connection block stations	Double solenoid valve Relay output module (2 points): Maximum 8 stations Single solenoid valve Relay output module (1 point): Maximum 16 stations
Block supply voltage	24VDC
Block supply current	0.65A maximum
Current consumption	100mA or less (at rated voltage)
Weight g	115

Options

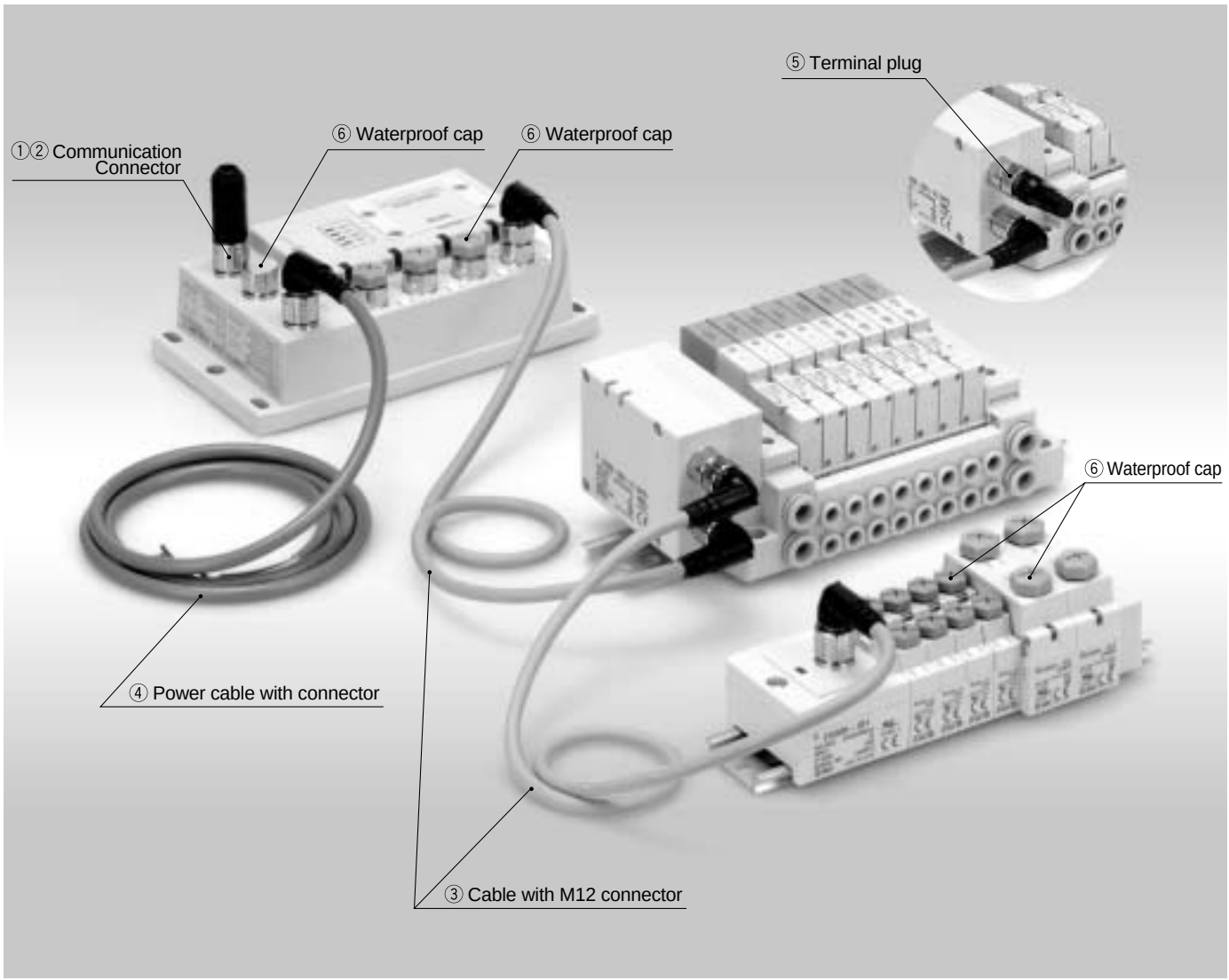

Options

① Communication connector (for RIO type GW unit)

EX500 − AC000 − AB

Nr.	Pin arrangement
1.	Line 1
2.	No connection
3.	Line 2
4.	Shield

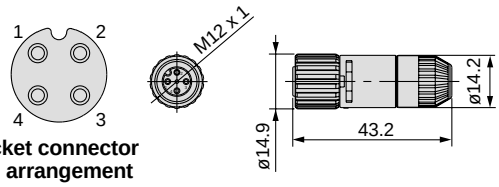

Socket connector pin arrangement

Compatible cable size
ø6 (ø5 to ø6)

② Communication connector cable (for DeviceNet type GW unit)

EX 500 − AC 050 − DN

Cable length (l)

010	1m
050	5m

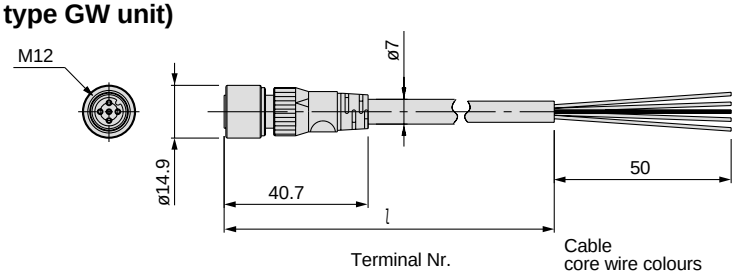

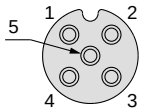

Socket connector pin arrangement

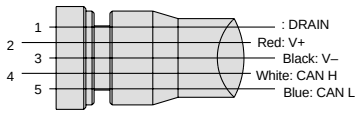

Connections

③ Communication connector (for GW unit with PROFIBUS- DP)

Example: Lumberg GmbH: RKCS 5/7 (Shielded)

Pin arrangement	
Input	Output
1. VP	1. No connection
2. RxD/TxD(N) A line	2. RxD/TxD (N) A line
3. DGND	3 No connection
4. RxD/TxD (P) B line	4. RxD/TxD (P) B line
5 Shield	5 Shield

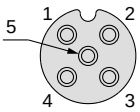

Socket connector pin arrangement

④ Cable with M12 connector

EX500 − AC 030 − SSPS

Cable length (l)

003	0.3m
005	0.5m
010	1m
030	3m
050	5m

Connector specification

SSPS	Socket side: Straight, Plug side: Straight
SAPA	Socket side: Angle, Plug side: Angle

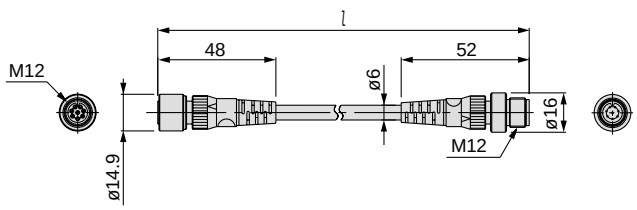

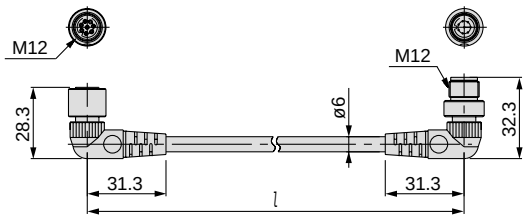

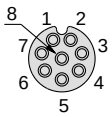

Socket connector pin arrangement

Terminal Nr. Cable core wire colours

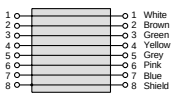

Connections

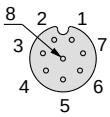

Plug connector pin arrangement

Straight connector type

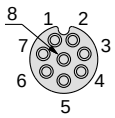

Socket connector pin arrangement

Terminal Nr. Cable core wire colours

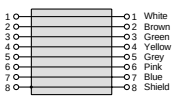

Connections

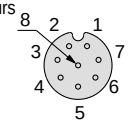

Plug connector pin arrangement

Angle connector type

Options

④ Power cable with connector

EX500 − AP 050 − S

Cable length (l)

010	1m
050	5m

Connector specifications

S	Straight
A	Angle

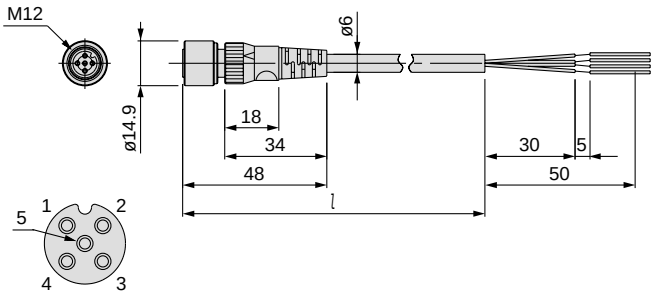

Socket connector pin arrangement

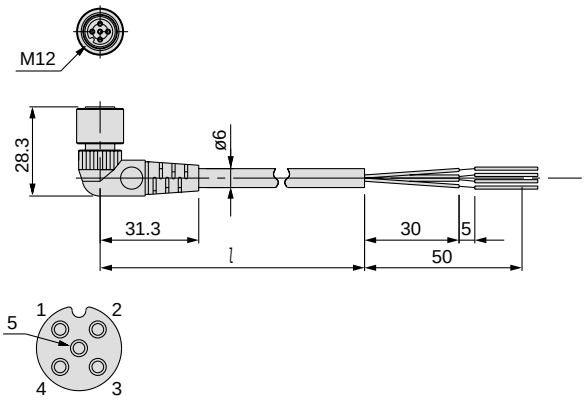

Socket connector pin arrangement

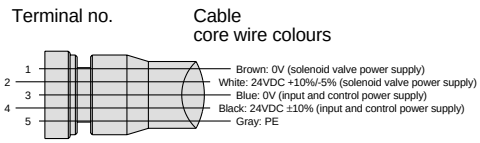

Connections

Straight connector type

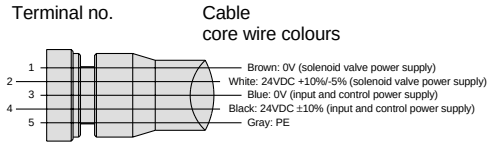

Connections

Angle connector type

⑤ Terminal plug

This is used where an input manifold (input unit/input block) is not being used.
(If a terminal plug is not used, the GW unit's COM LED will not light up.)

EX500 − AC000 − S

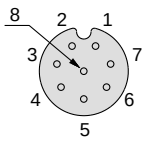

Plug connector pin arrangement

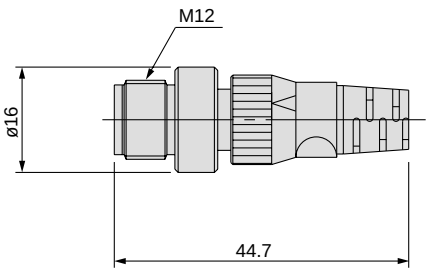

⑥ Waterproof cap

Use this on ports that are not being used for a GW unit or input block.
Use of this waterproof cap maintains the integrity of the IP65 enclosure.
(Included with each input block.)

Note) Tighten the waterproof cap with the prescribed tightening torque. (For M8: 0.05N·m, For M12: 0.1N·m)

EX500 − AW

Connector type

ES	M8 connector (for socket)
TP	M12 connector (for plug)
TS	M12 connector (for socket)

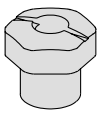

Waterproof cap

Dimensions: Series SV1000 for EX500 Decentralized Serial Wiring

• **Cassette base manifold:** **SS5V1-W16SA□WD - Stations U/D/B (S, R, RS) - C3, N1 / C4, N3 / C6, N7**

• When P, E port outlets are indicated on the U side or D side, the P, E ports on the opposite side are plugged.
• External pilot port positions and silencer discharge port positions are the same as P, E port outlet positions.

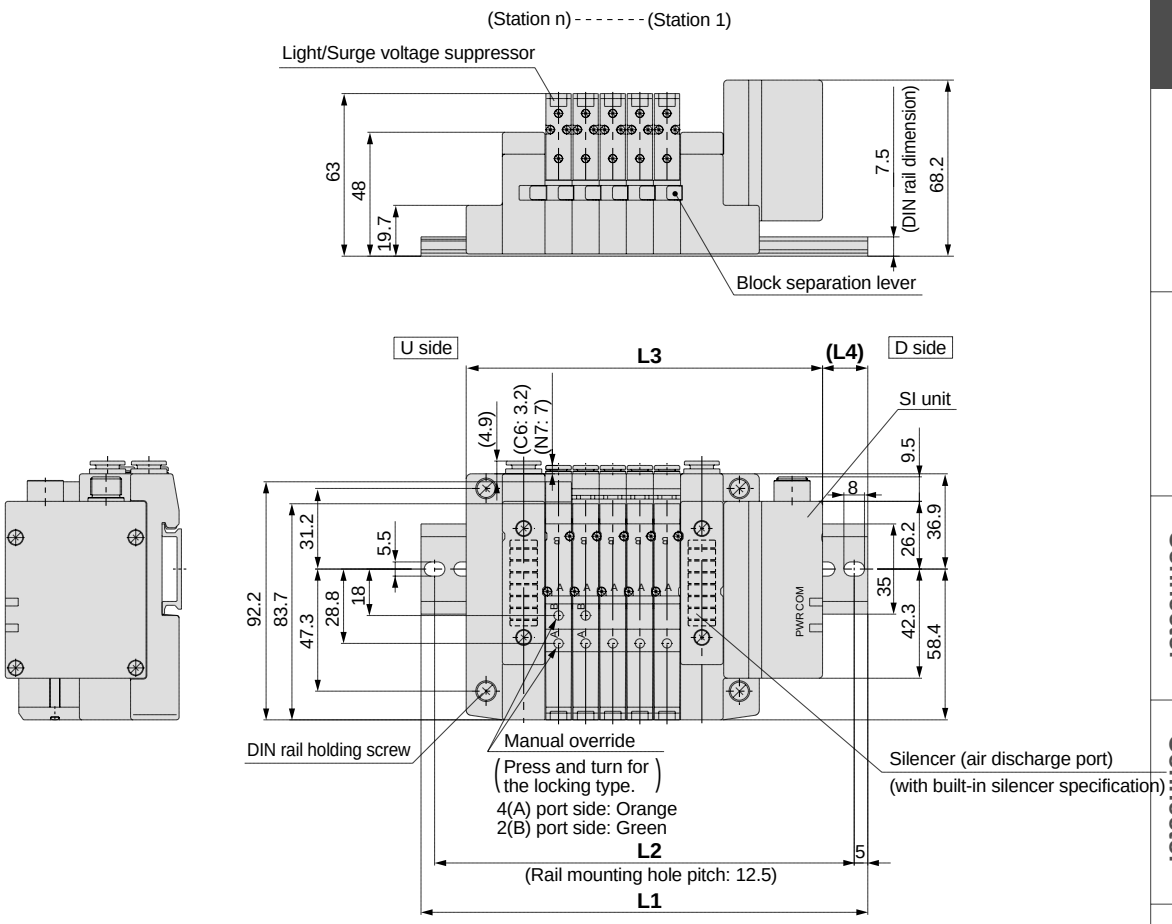

With external pilot specification

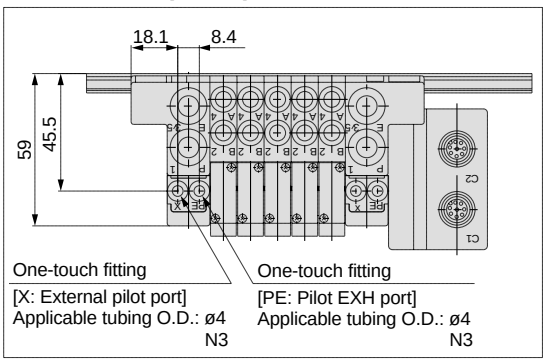

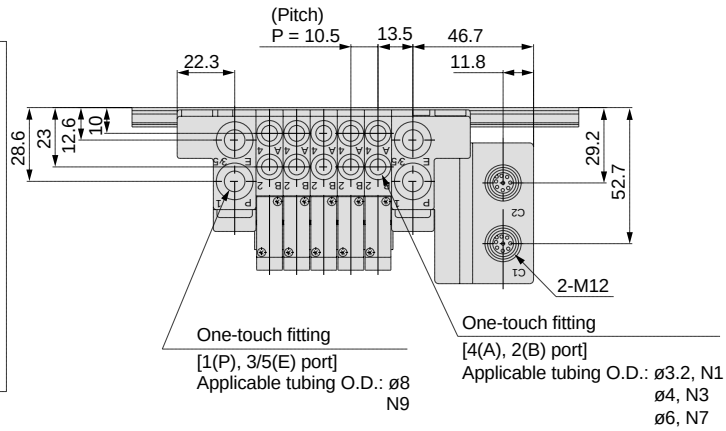

L dimensions

n: Stations

L \ n	2	3	4	5	6	7	8	9	10	11	12	13	14	15	16
L1	135.5	148	160.5	173	173	185.5	198	210.5	223	235.5	235.5	248	260.5	273	285.5
L2	125	137.5	150	162.5	162.5	175	187.5	200	212.5	225	225	237.5	250	262.5	275
L3	106.5	117	127.5	138	148.5	159	169.5	180	190.5	201	211.5	222	232.5	243	253.5
L4	14.5	15.5	16.5	17.5	12.5	13.5	14.5	15.5	16.5	17.5	12	13	14	15	16

Dimensions: Series SV2000 for EX500 Decentralized Serial Wiring

• **Cassette base manifold: SS5V2-W16SA□WD - Stations U D B (S, R, RS) - C4, N3 C6, N7 C8, N9**

- When P, E port outlets are indicated on the U side or D side, the P, E ports on the opposite side are plugged.
- External pilot port positions and silencer discharge port positions are the same as P, E port outlet positions.

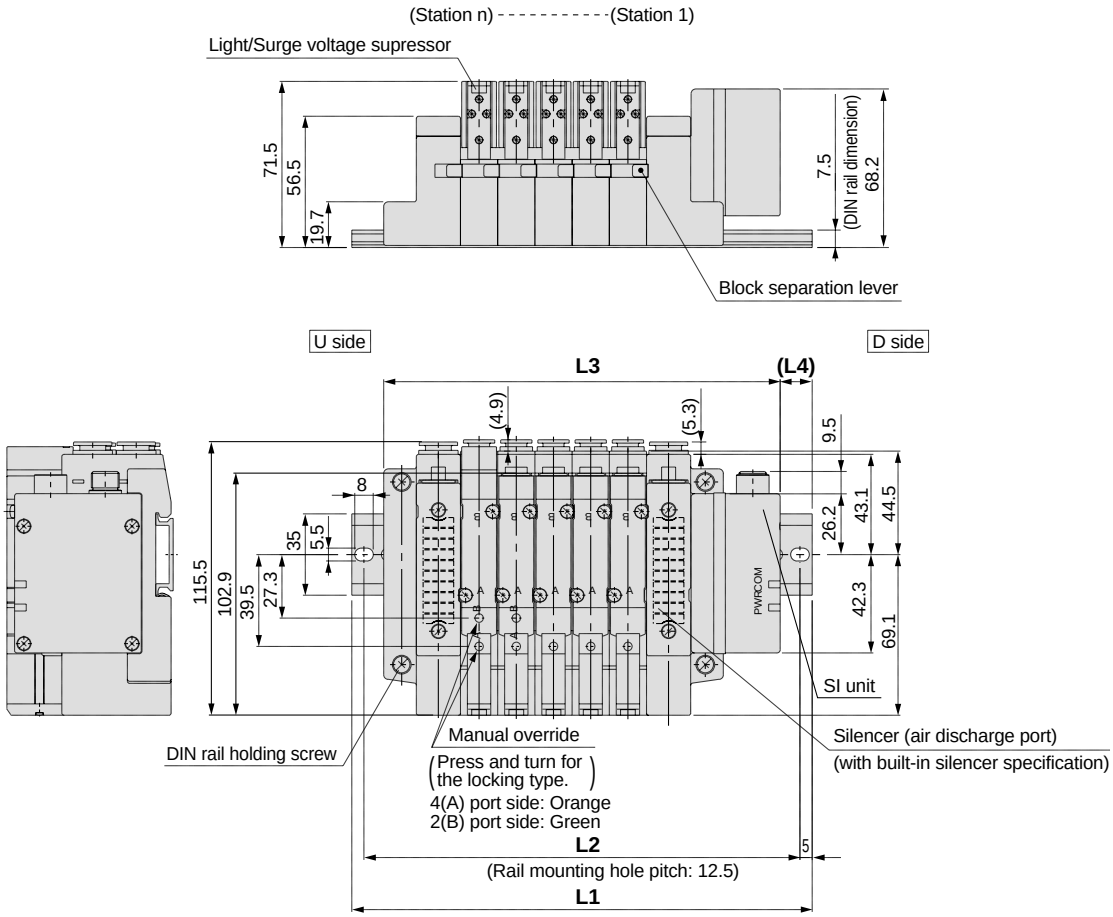

With external pilot specification

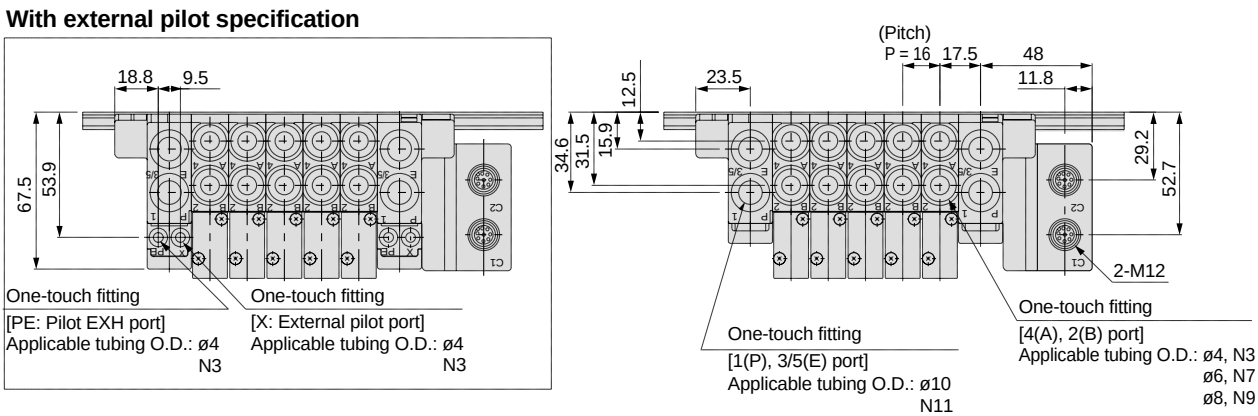

L dimensions

n: Stations

L \ n	2	3	4	5	6	7	8	9	10	11	12	13	14	15	16
L1	148	173	185.5	198	210.5	235.5	248	260.5	285.5	298	310.5	323	348	360.5	373
L2	137.5	162.5	175	187.5	200	225	237.5	250	275	287.5	300	312.5	337.5	350	362.5
L3	122.5	138.5	154.5	170.5	186.5	202.5	218.5	234.5	250.5	266.5	282.5	298.5	314.5	330.5	346.5
L4	13	17.5	15.5	14	12	16.5	15	13	17.5	16	14	12.5	17	15	13.5

Dimensions: Series SV1000 for EX500 Decentralized Serial Wiring

- **Tie-rod base manifold: SS5V1-W10SA□WD - Stations U/D/B (S, R, RS) C3, N1 / C4, N3 / C6, N7 (-D)**

- When P, E port outlets are indicated on the U side or D side, the P, E ports on the opposite side are plugged.
- External pilot port positions and silencer discharge port positions are the same as P, E port outlet positions.

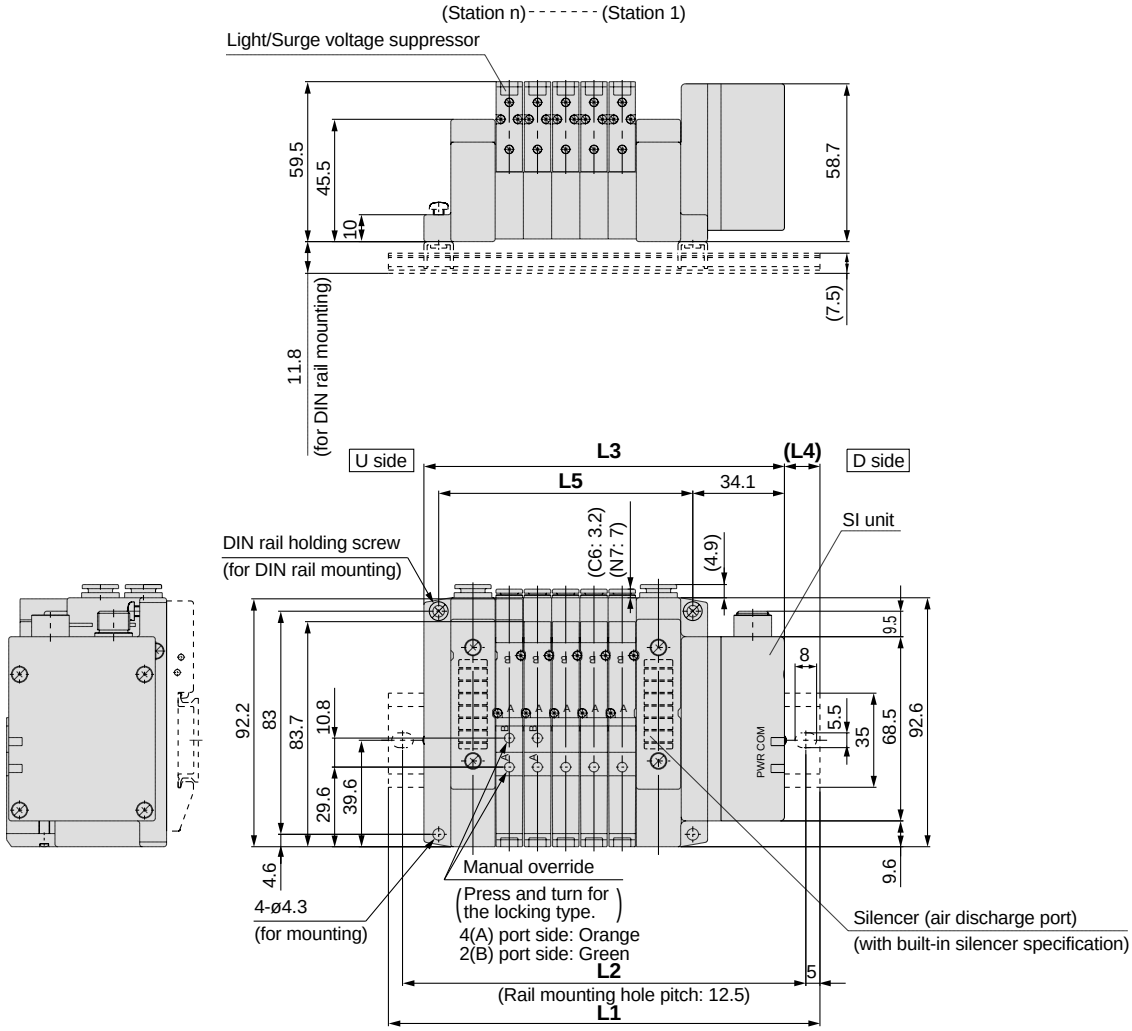

With external pilot specification

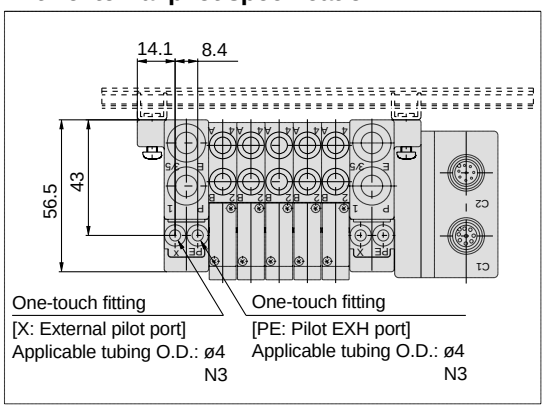

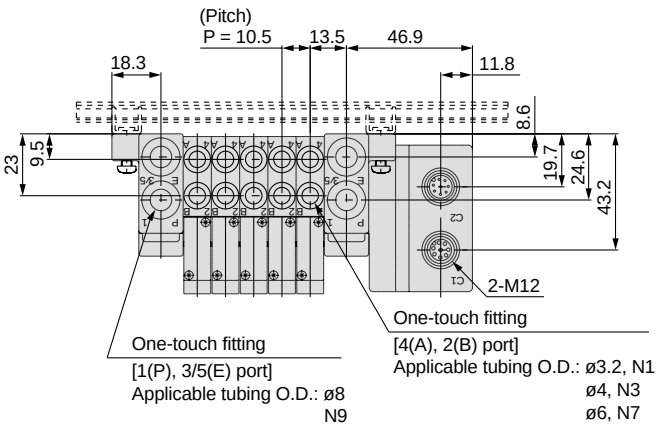

L dimensions

n: Stations

L \ n	2	3	4	5	6	7	8	9	10	11	12	13	14	15	16
L1	135.5	148	148	160.5	173	185.5	198	210.5	210.5	223	235.5	248	260.5	273	273
L2	125	137.5	137.5	150	162.5	175	187.5	200	200	212.5	225	237.5	250	262.5	262.5
L3	102.6	113.1	123.6	134.1	144.6	155.1	165.6	176.1	186.6	197.1	207.6	218.1	228.6	239.1	249.6
L4	16.5	17.5	12	13	14	15	16	17	12	13	14	15	16	17	11.5
L5	63	73.5	84	94.5	105	115.5	126	136.5	147	157.5	168	178.5	189	199.5	210

Dimensions: Series SV2000 for EX500 Decentralized Serial Wiring

• **Tie-rod base manifold: SS5V2-W10SA□WD - Stations U D B (S, R, RS) - C4, N3 C6, N7 C8, N9 (-D)**

- When P, E port outlets are indicated on the U side or D side, the P, E ports on the opposite side are plugged.
- External pilot port positions and silencer discharge port positions are the same as P, E port outlet positions.

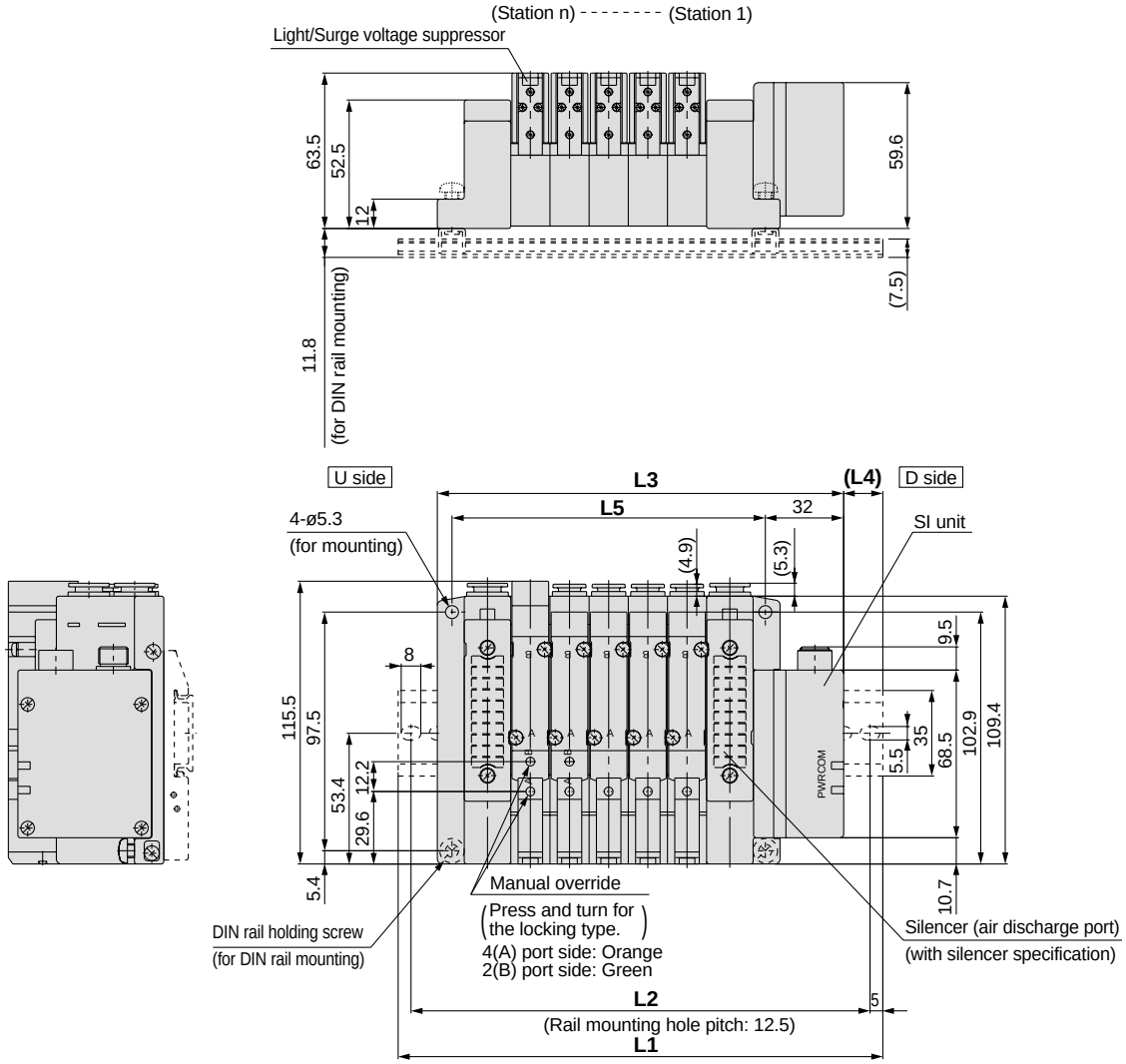

With external pilot specification

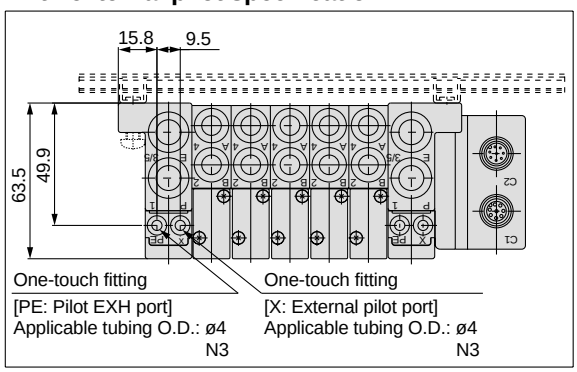

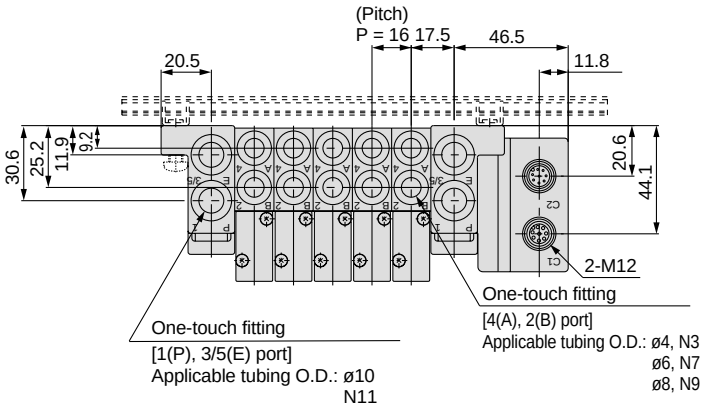

L dimensions

n: Stations

L \ n	2	3	4	5	6	7	8	9	10	11	12	13	14	15	16
L1	148	160.5	185.5	198	210.5	223	248	260.5	273	285.5	310.5	323	335.5	360.5	373
L2	137.5	150	175	187.5	200	212.5	237.5	250	262.5	275	300	312.5	325	350	362.5
L3	118	134	150	166	182	198	214	230	246	262	278	294	310	326	342
L4	15	13.5	18	16	14.5	12.5	17	15.5	13.5	12	16.5	14.5	13	17.5	15.5
L5	80	96	112	128	144	160	176	192	208	224	240	256	272	288	304

Dimensions: Series SV3000 for EX500 Decentralized Serial Wiring

• **Tie-rod base manifold: SS5V3-W10SA□WD - Stations U/D/B (S, R, RS) C6, N7 / C8, N9 / C10, N11 (-D)**

- When P, E port outlets are indicated on the U side or D side, the P, E ports on the opposite side are plugged.
- External pilot port positions and silencer discharge port positions are the same as P, E port outlet positions.

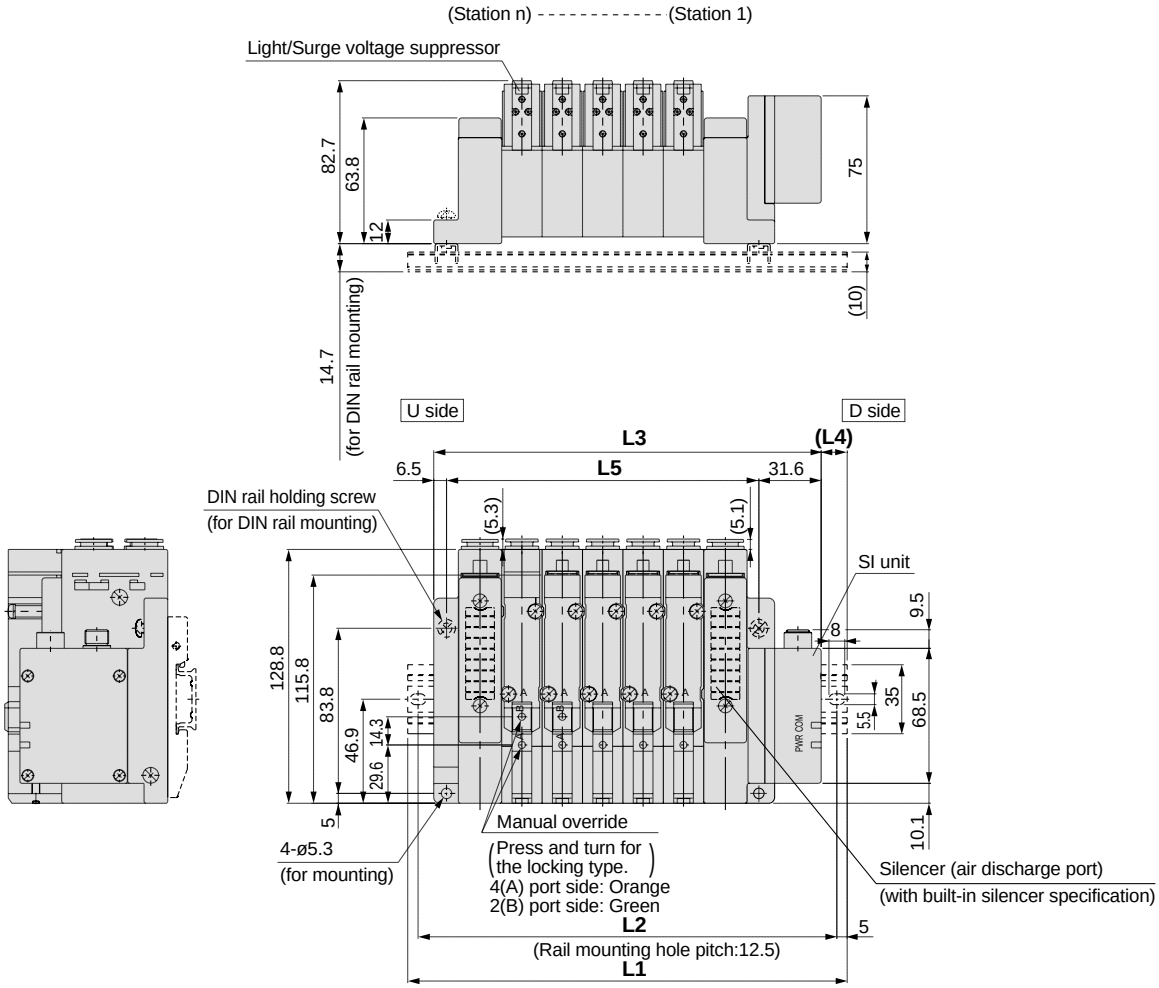

With external pilot specification

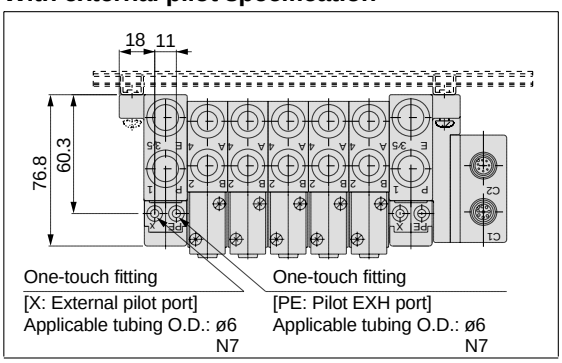

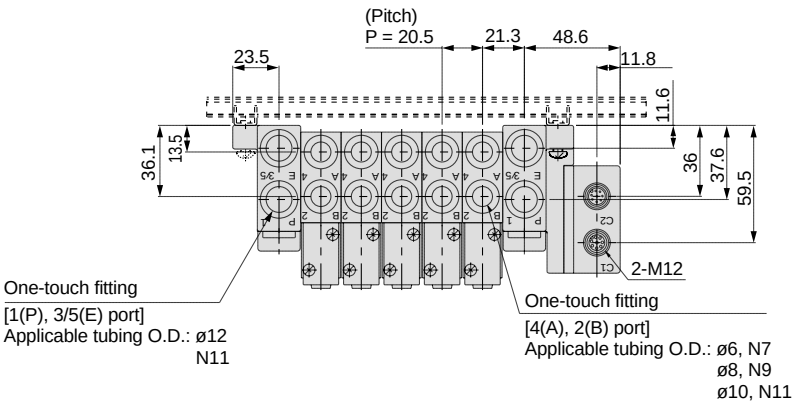

L dimensions

n: Stations

L \ n	2	3	4	5	6	7	8	9	10	11	12	13	14	15	16
L1	160.5	185.5	210.5	223	248	273	285.5	310.5	323	348	373	385.5	410.5	435.5	448
L2	150	175	200	212.5	237.5	262.5	275	300	312.5	337.5	362.5	375	400	425	437.5
L3	135.1	155.6	176.1	196.6	217.1	237.6	258.1	278.6	299.1	319.6	340.1	360.6	381.1	401.6	422.1
L4	12.5	15	17	13	15.5	17.5	13.5	16	12	14	16.5	12.5	14.5	17	13
L5	97	117.5	138	158.5	179	199.5	220	240.5	261	281.5	302	322.5	343	363.5	384

Dimensions: Series SV4000 for EX500 Decentralized Serial Wiring

• **Tie-rod base manifold: SS5V4-W10SA□WD - Stations U/D/B (S, R, RS) 02, 03, C8, C10, C12, N9, N11 (-D)**

- When P, E port outlets are indicated on the U side or D side, the P, E ports on the opposite side are plugged.
- External pilot port positions and silencer discharge port positions are the same as P, E port outlet positions.

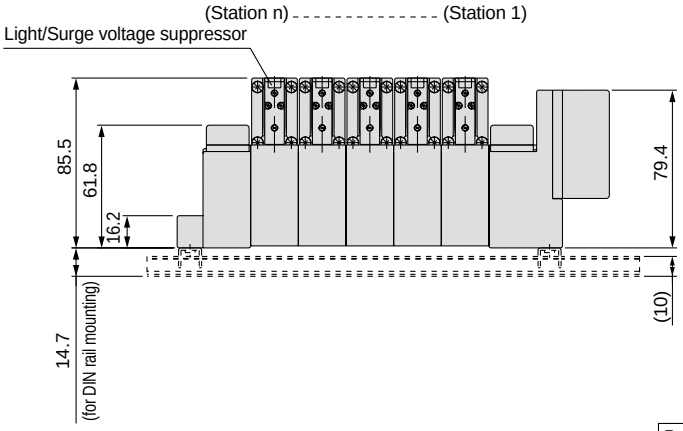

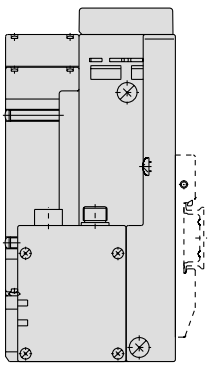

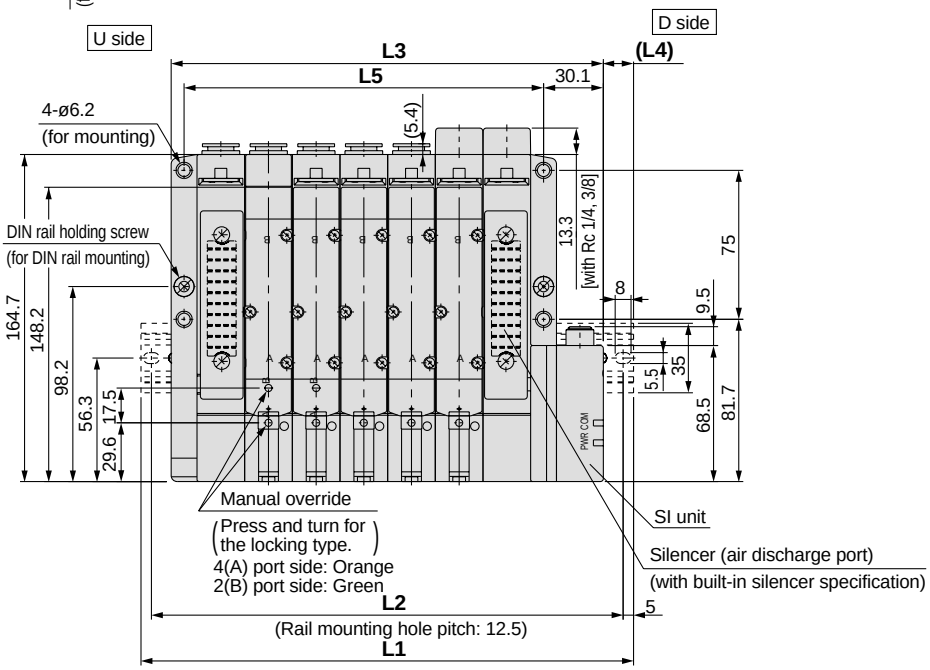

With external pilot specification

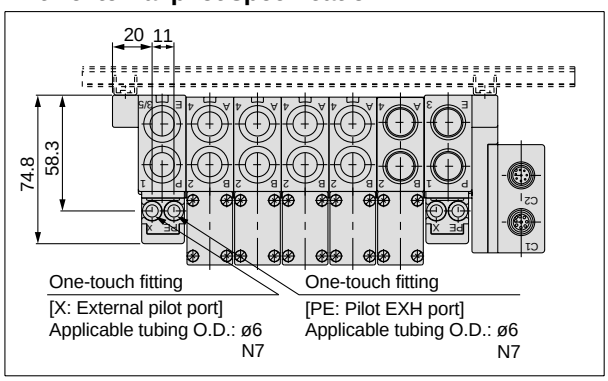

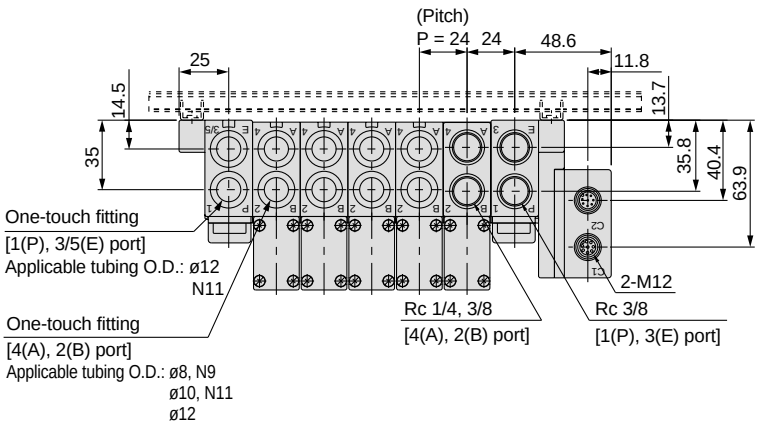

L dimensions

n: Stations

L \ n	2	3	4	5	6	7	8	9	10	11	12	13	14	15	16
L1	173	198	223	248	273	298	323	348	373	385.5	410.5	435.5	460.5	485.5	510.5
L2	162.5	187.5	212.5	237.5	262.5	287.5	312.5	337.5	362.5	375	400	425	450	475	500
L3	145.6	169.6	193.6	217.6	241.6	265.6	289.6	313.6	337.6	361.6	385.6	409.6	433.6	457.6	481.6
L4	13.5	14	14.5	15	15.5	16	16.5	17	17.5	12	12.5	13	13.5	14	14.5
L5	109	133	157	181	205	229	253	277	301	325	349	373	397	421	445

Serial Wiring with Input/Output Unit

Series EX250

IP67 protection

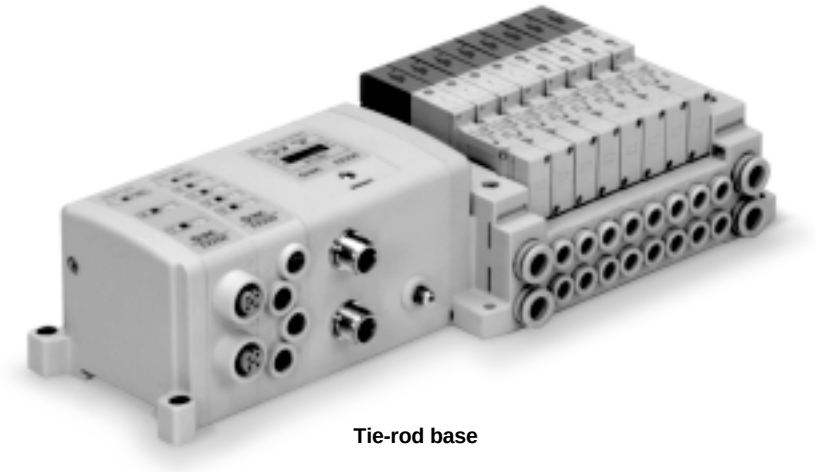

Tie-rod base

Applicable series	Tie-rod base manifold SV1000/SV2000/SV3000
DeviceNet / PROFIBUS-DP	

DeviceNet

Specifications

Transmission rate	500 kbit/s or less
Bus cable length	500m or less
Number of inputs/outputs	32I/32O each
Bus structure	line, tree, star

PROFIBUS-DP

Specifications

Transmission rate	12'000 kbit/s or less
Bus cable length	200m or less (without repeater) 23km or less (with repeater)
Number of inputs/outputs	32I/32O each
Bus structure	line, tree, star

EX250
Serial Wiring with Input/Output Unit
Series SV

How to Order

• **Tie-rod base**

SS5V 1 – W10S1 QW □ □ □ D – 05 U □ – □ – □

Series

1	SV1000
2	SV2000
3	SV3000

Enclosure
IP67 specification

SI unit specification

QW	For DeviceNet
NW	For PROFIBUS-DP
0	Without SI unit

• Input blocks cannot be mounted without SI unit.
• When the DIN rail is included without an SI unit, the DIN rail length will accommodate an SI unit and one input block.

Input block stations

Nil	None
1	1 station
⋮	⋮
8	8 stations

Note) Without SI unit, the symbol is nil.

Input block type

Nil	Without input block
1	M12: 2 inputs
2	M12: 4 inputs
3	M8: 4 inputs (3 pins)

Note) Without SI unit, the symbol is nil.

Input block common specification

Nil	+COM
N	–COM

Valve stations

Symbol	Stations	Note
02	2 stations	Double wiring specification (Note 1)
⋮	⋮	
16	16 stations	
02	2 stations	Specified layout (Up to 32 solenoids possible.) (Note 2)
⋮	⋮	
20	20 stations	

Note 1) Double wiring specification: Single, double and 3 position solenoid valves can be used on all manifold stations.
Use of a single solenoid will result in an unused control signal. If this is not desired, order with a specified layout.

Note 2) Specified layout: Indicate wiring specifications on a manifold specification sheet.
(Note that double and 3 position valves cannot be used where single solenoid wiring has been specified.)

P, E port position

U	U side (2 to 10 stations)
D	D side (2 to 10 stations)
B	Both sides (2 to 20 stations)

Supply/Exhaust block assembly specification

Nil	Internal pilot specification
S*	Internal pilot/Built-in silencer
R	External pilot specification
RS*	External pilot/Built-in silencer

* When the built-in silencer type is used, keep the exhaust port from coming in direct contact with water or other liquids.

Mounting

Nil	Direct mount	
D	DIN rail mount (with DIN rail)	
D0 (Note)	DIN rail mount (without DIN rail)	
D3	For 3 stations	When a DIN rail longer than the specified stations is required. (Specify a rail longer than the standard length.)
⋮	⋮	
D20	For 20 stations	

Note) In case of D0, only DIN rail fittings are attached.

A, B port size (metric)

Symbol	A, B port	P, E port	Applicable series
C3	ø3.2 One-touch fitting	ø8 One-touch fitting	SV1000
C4	ø4 One-touch fitting		
C6	ø6 One-touch fitting		
C4	ø4 One-touch fitting	ø10 One-touch fitting	SV2000
C6	ø6 One-touch fitting		
C8	ø8 One-touch fitting		
C6	ø6 One-touch fitting	ø12 One-touch fitting	SV3000
C8	ø8 One-touch fitting		
C10	ø10 One-touch fitting		
M	A, B ports mixed		

A, B port size (inch)

Symbol	A, B port	P, E port	Applicable series
N1	ø1/8" One-touch fitting	ø5/16" One-touch fitting	SV1000
N3	ø5/32" One-touch fitting		
N7	ø1/4" One-touch fitting		
N3	ø5/32" One-touch fitting	ø3/8" One-touch fitting	SV2000
N7	ø1/4" One-touch fitting		
N9	ø5/16" One-touch fitting		
N7	ø1/4" One-touch fitting	ø3/8" One-touch fitting	SV3000
N9	ø5/16" One-touch fitting		
N11	ø3/8" One-touch fitting		
M	A, B ports mixed		

* In case of mixed specification (M), indicate separately on a manifold specification sheet.

How to Order Manifold Assemblies (Order Example)

Example (SV1000)

Manifold
SS5V1-W10S1QW11ND-05B-C6 (1 set)

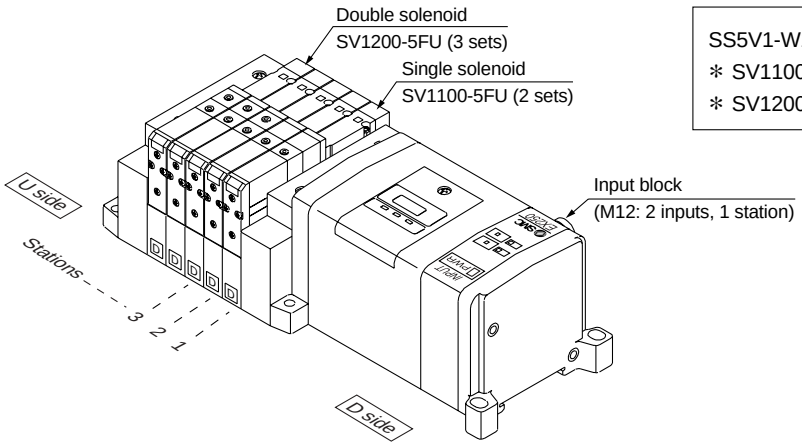

SS5V1-W10S1QW11ND-05B-C6 ..... 1 set (manifold part no.)
∗ SV1100-5FU ..... 2 sets (single solenoid part no.)
∗ SV1200-5FU ..... 3 sets (double solenoid part no.)

How to Order Solenoid Valves

SV 1 1 0 0 □ □ — 5 F □ □ — □

Note) Available with manifold block for station additions. Refer to page 81.

Series

1	SV1000
2	SV2000
3	SV3000

Type of actuation

1	2 position single solenoid
2	2 position double solenoid
3	3 position closed center
4	3 position exhaust center
5	3 position pressure center
A	4 position dual 3 port valve: N.C./N.C.
B	4 position dual 3 port valve: N.O./N.O.
C	4 position dual 3 port valve: N.C./N.O.

∗ 4 position dual 3 port valves are applicable to series SV1000 and SV2000 only.

Pilot specification

Nil	Internal pilot
R	External pilot

∗ External pilot specification is not available for 4 position dual 3 port valves.

Back pressure check valve

Nil	None
K	Built-in

∗ Built-in back pressure check valve type is applicable to series SV1000 only.
∗ Back pressure check valve is not available for 3 position closed center and 3 position pressure center.
∗ Flow rate with the built-in back pressure check valve is reduced approximately 20%.

Rated voltage

5	24VDC

Manual override

Nil: Non-locking push type	**D:** Slotted locking type
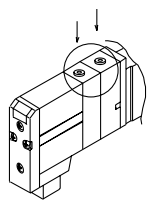	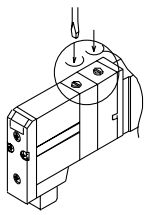

Light/Surge voltage suppressor

U	With light and surge voltage suppressor
R	With surge voltage suppressor

Series EX250 Serial Transmission Unit with input / output module — SV1000/2000/3000

The serial data transmission system reduces connection work, while minimizing wiring cost and saves space.

DeviceNet / Profibus DP compatible SI unit. The unit in question is a slave unit, which can control up to 32 outputs.
Additionally, by connecting input blocks a maximum of 32 inputs signals are possible.
The input blocks allow the connection to the SI unit, of input signals from sensors like auto switches etc.
An input module can accommodate two or four sensor inputs. Each module can be adapted to NPN/PNP sensors using a switch.
Input modules with both M12 and M8 connectors are available.

Circuit diagram Input module (EX250-IE*)

Input connection: M12 ... 5 pin (Socket)
Example for the cable side connection:
Karl Lumberg GmbH: Series RST5; Franz Binder GmbH: Series 713,763

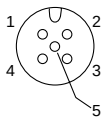

Pos.	Description	Function
1	SW+	Sensor power supply +
2	N.C (SIGNAL)	Open*
3	SW–	Sensor power supply –
4	SIGNAL	Sensor input signal
5	E	Sensor ground connection

∗ In the 4 input type unit (EX250-IE2), this is the input signal from the second sensor connected.

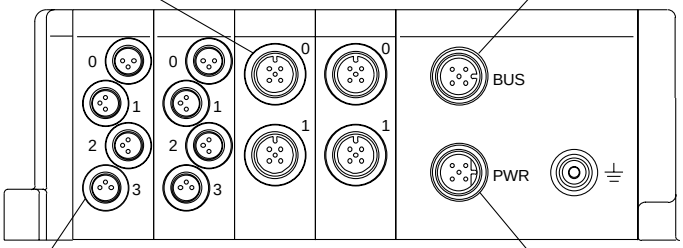

Input connection: M8 ... 3 pin (Socket)
Example for cable side connection: Franz Binder GmbH Series 718, 768
Karl Lumberg GmbH: Series RSMV3

Pos.	Description	Function
1	SW+	Sensor power supply +
3	SW-	Sensor power supply –
4	SIGNAL	Sensor input signal

Communication connector

DeviceNet: M12...5 pin (Plug) Example for a cable set with plug / socket:
Karl Lumberg GmbH: 0935 253 103/...M, RSC RKC 57* ... M
Accessories, bus branch Y: Karl Lumberg GmbH: 0906 UTP 101, Hans Turck GmbH: VB2-FKM-FSM57.
Accessories terminating socket with resistor: Hans Turck GmbH: RSE57-TR2, Karl Lumberg GmbH: 0939 CXT 101.

Pos.	Description	Function
1	Drain	Drain / shield
2	V+	Circuit power supply +
3	V–	Circuit power supply –
4	CAN_H	Signal H
5	CAN_L	Signal L

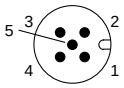

PROFIBUS-DP: M12... 5 pin reserve-keyed (Socket).Example for the corresponding cable sets with plug / socket:
Hans Turck GmbH: RSSW-RKSW456-...M; Karl Lumberg GmbH: 0975 254 101/...M
Accessories Bus branch Y: Hans Turck GmbH: VB2/FSW/FKW/FSW45
Accessories terminating resistor: Hans Turck GmbH: RSS4.5-PDP-TR; Karl Lumberg GmbH: 0979PTX101

Pos.	Description	Function
1	VP	Power supply for terminating resistor
2	A-N	Negative for data transfer / reception
3	DGND	Ground for terminating resistor
4	B-P	Positive for data transfer / reception
5	SHIELD	Shield

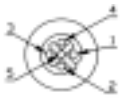

Power supply

DeviceNet:: M12 ... 5 pin reserve-keyed (Plug)
(The configuration of the connection surface area differs from that of the transmission plug)
Example of the cable set with socket: Hans Turck GmbH: WAKW4.5T-2, Franz Binder GmbH: 79-4449-..-05.

Pos.	Description	Function
1	SV24V	+24V solenoid valve
2	SV0V	0V solenoid valve
3	SW24V	+24V SI and input blocks
4	SW0V	0V SI and input blocks
5	E	Ground connection

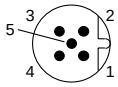

PROFIBUS-DP: M12...5 pin (Plug)
Example of the cable set with socket:
SMC: EX500-AP...S (see page 16)

Pos.	Description	Function
1	SV24V	+24V solenoid valve
2	SV0V	0V solenoid valve
3	SW24V	+24V SI and input blocks
4	SW0V	0V SI and input blocks
5	E	Ground connection

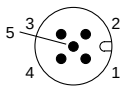

Description and operation of the display unit (LED)

■ SI unit (DeviceNet)

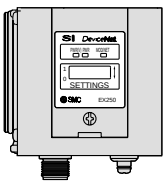

Description	Function
PWR(V)	Illuminates when the solenoid valve's power supply is switched on.
PWR	Illuminates when the power supply for the DeviceNet circuit is switched on.
MOD/NET	OFF when the power supply is switched off, off-line or during the MAC_ID duplication test
	GREEN BLINKING: Waiting to connect (on-line).
	GREEN ILLUMINATED: connection established (on-line).
	RED BLINKING: Connection time out exhausted (minor transmission error).
	RED ILLUMINATED: MAC_ID Duplication error or BUSOFF error (serious transmission error).

■ SI unit (PROFIBUS-DP)

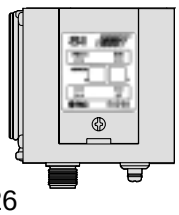

Description	Function
PWR(V)	Illuminates when the solenoid valve's power supply is switched on. OFF when the power supply is less than 19V
RUN	Illuminates whilst operational (SI unit's power supply is present).
DIA	Illuminates when there is an alarm during the auto diagnosis.
BF	Illuminates when there is a BUS operational error

■ input module

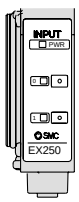

2 inputs (EX250-IE1)

4 inputs (EX250-IE2/3)

Description	Function
PWR	ON with the sensor power supply connected
0 to 1(3)	ON when switching on the respective sensor input

Weight

Description	Weight [g]
SI unit	225
Input module	85
End plate	30

∗ See pg. 78 for the mounting of components.

Dimensions: Series SV1000 for EX250 Serial Wiring with Input/Output Unit

• **Tie-rod base manifold: SS5V1-W10S1□□□□D - Stations U D B (S, R, RS) - C3, N1 C4, N3 C6, N7 (-D)**

• When P, E port outlets are indicated on the U side or D side, the P, E ports on the opposite side are plugged.
• External pilot port positions and silencer discharge port positions are the same as P, E port outlet positions.

(With 2 input blocks)

n1 = Valve stations
n2 = Input block stations

L2 = L1 – 10.5
L3 = 10.5 x n1 + 53
L4 = L3 + 81 + 21 x n2
L5 = (L1 – L4)/2
L6 = 10.5 x n1 + 42
L7 = 21 x n2 + 81

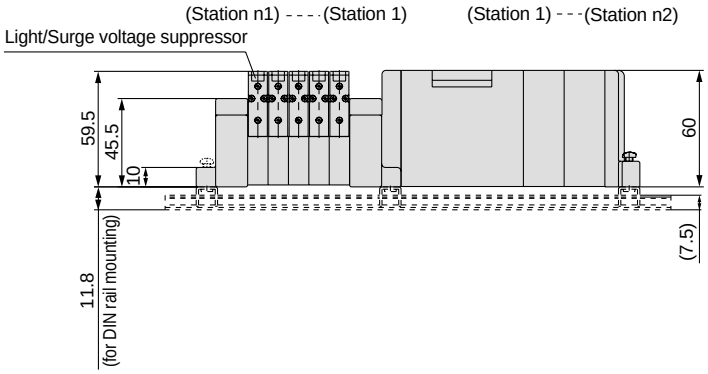

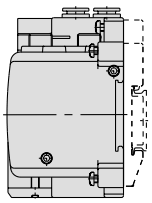

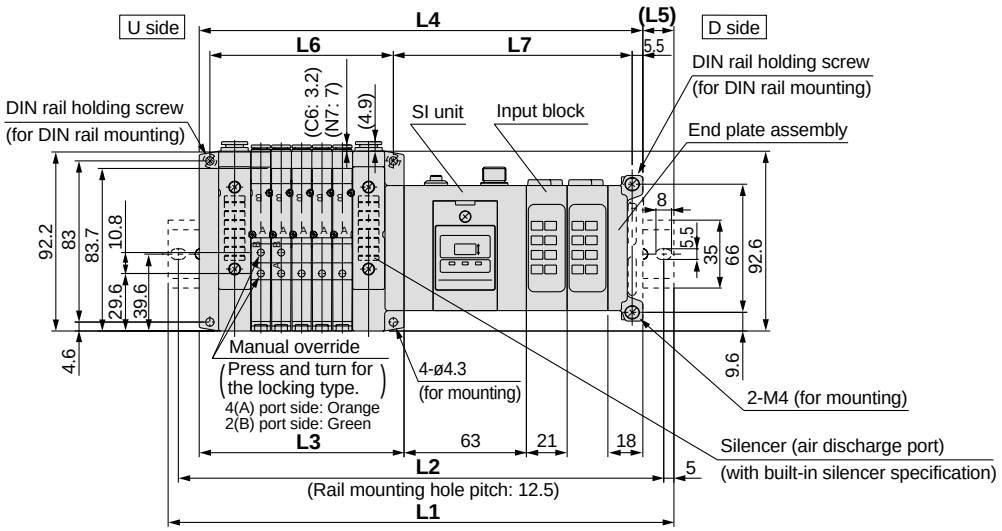

With external pilot specification

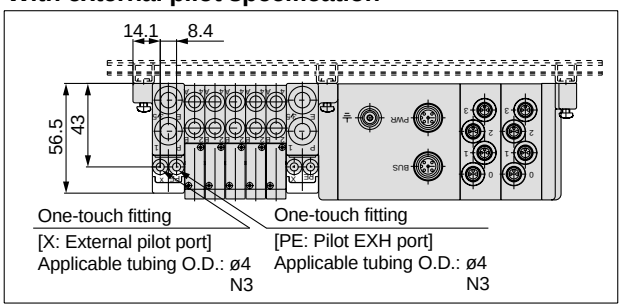

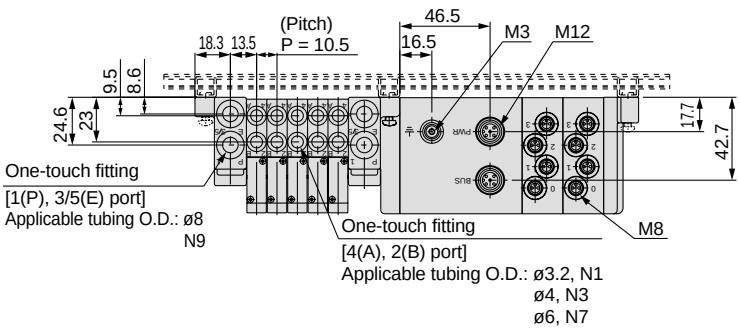

L1: DIN rail overall length

Input block Stations (n2) \ Valve stations (n1)	2	3	4	5	6	7	8	9	10	11	12	13	14	15	16	17	18	19	20
0	185.5	198	210.5	210.5	223	235.5	248	260.5	273	273	285.5	298	310.5	323	335.5	348	348	360.5	373
1	210.5	210.5	223	235.5	248	260.5	273	273	285.5	298	310.5	323	335.5	348	348	360.5	373	385.5	398
2	223	235.5	248	260.5	273	273	285.5	298	310.5	323	335.5	348	348	360.5	373	385.5	398	410.5	410.5
3	248	260.5	273	273	285.5	298	310.5	323	335.5	348	348	360.5	373	385.5	398	410.5	410.5	423	435.5
4	273	273	285.5	298	310.5	323	335.5	348	348	360.5	373	385.5	398	410.5	410.5	423	435.5	448	460.5
5	285.5	298	310.5	323	335.5	348	348	360.5	373	385.5	398	410.5	410.5	423	435.5	448	460.5	473	473
6	310.5	323	335.5	348	348	360.5	373	385.5	398	410.5	410.5	423	435.5	448	460.5	473	473	485.5	498
7	335.5	348	348	360.5	373	385.5	398	410.5	410.5	423	435.5	448	460.5	473	473	485.5	498	510.5	523
8	348	360.5	373	385.5	398	410.5	410.5	423	435.5	448	460.5	473	473	485.5	498	510.5	523	535.5	535.5

Dimensions: Series SV2000 for EX250 Serial Wiring with Input/Output Unit

• **Tie-rod base manifold: SS5V2-W10S1□□□□D - Stations U/D/B (S, R, RS) C4, N3 / C6, N7 / C8, N9 (-D)**

(With 2 input blocks)

• When P, E port outlets are indicated on the U side or D side, the P, E ports on the opposite side are plugged.
• External pilot port positions and silencer discharge port positions are the same as P, E port outlet positions.

n1 = Valve stations
n2 = Input block stations

L2 = L1 – 10.5
L3 = 16 x n1 + 60
L4 = L3 + 81 + 21 x n2
L5 = (L1 – L4)/2
L6 = 16 x n1 + 48
L7 = 21 x n2 + 81.5

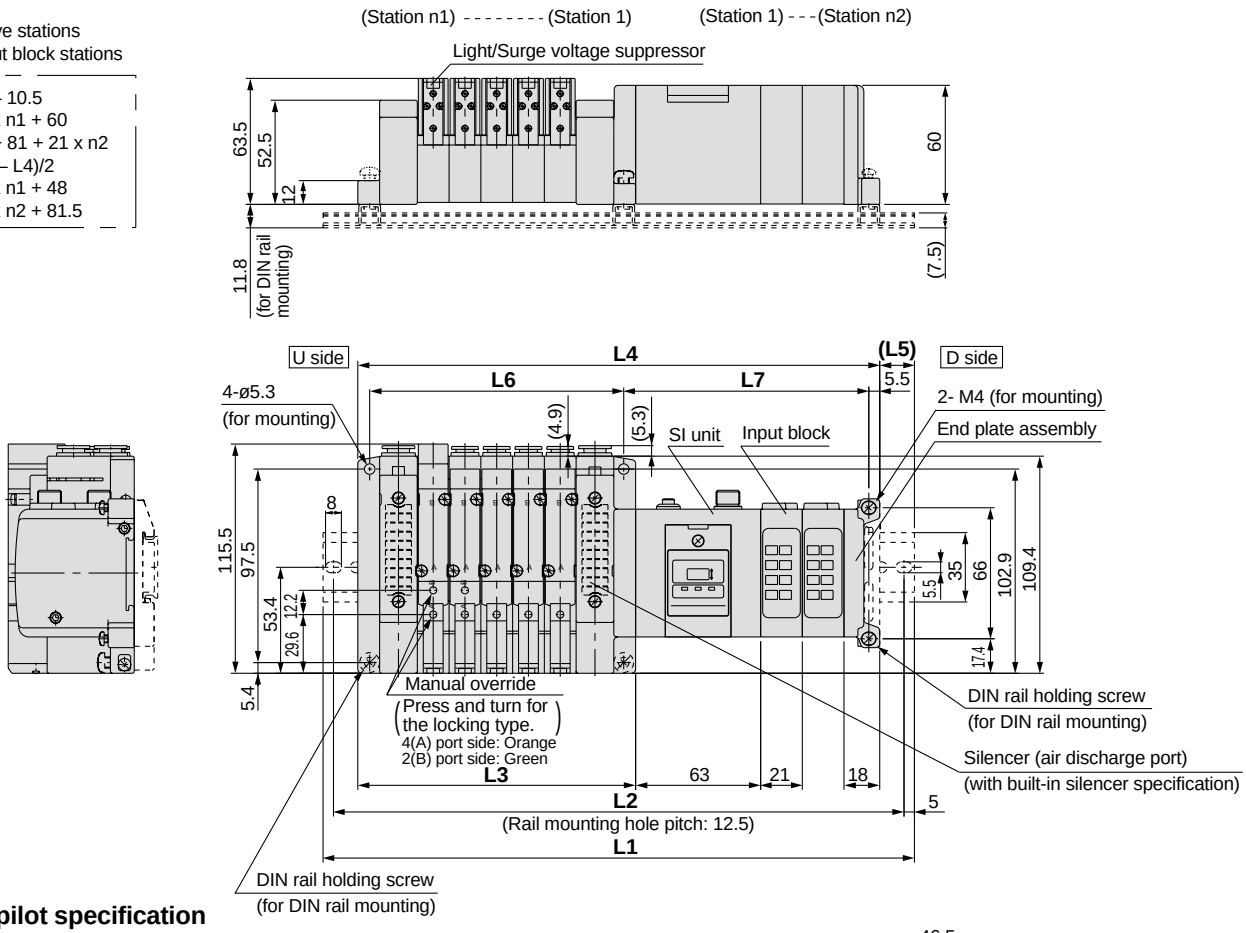

With external pilot specification

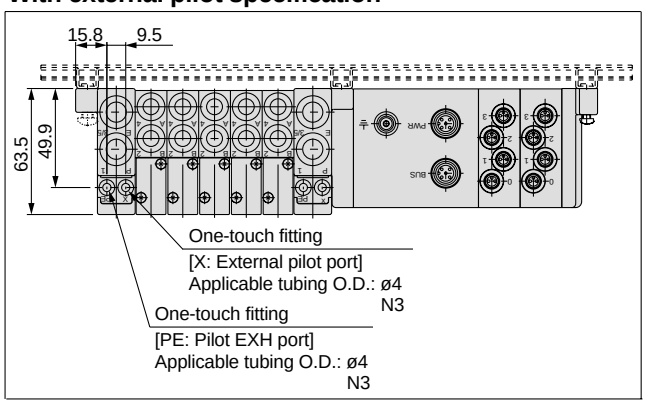

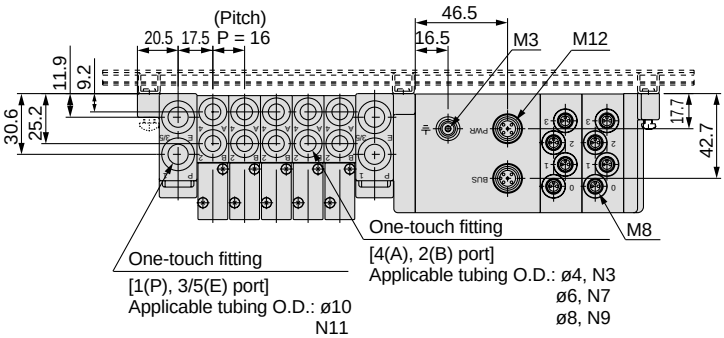

L1: DIN rail overall length

Input block stations (n2) \ Valve stations (n1)	2	3	4	5	6	7	8	9	10	11	12	13	14	15	16	17	18	19	20
0	198	223	235.5	248	260.5	285.5	298	310.5	335.5	348	360.5	373	398	410.5	423	448	460.5	473	485.5
1	223	235.5	260.5	273	285.5	298	323	335.5	348	373	385.5	398	410.5	435.5	448	460.5	485.5	498	510.5
2	248	260.5	273	298	310.5	323	335.5	360.5	373	385.5	410.5	423	435.5	448	473	485.5	498	510.5	535.5
3	260.5	285.5	298	310.5	335.5	348	360.5	373	398	410.5	423	435.5	460.5	473	485.5	510.5	523	535.5	548
4	285.5	298	323	335.5	348	360.5	385.5	398	410.5	435.5	448	460.5	473	498	510.5	523	548	560.5	573
5	310.5	323	335.5	360.5	373	385.5	398	423	435.5	448	473	485.5	498	510.5	535.5	548	560.5	585.5	598
6	323	348	360.5	373	398	410.5	423	435.5	460.5	473	485.5	510.5	523	535.5	548	573	585.5	598	610.5
7	348	360.5	385.5	398	410.5	435.5	448	460.5	473	498	510.5	523	535.5	560.5	573	585.5	610.5	623	635.5
8	373	385.5	398	423	435.5	448	460.5	485.5	498	510.5	535.5	548	560.5	573	598	610.5	623	648	660.5

Dimensions: Series SV3000 for EX250 Serial Wiring with Input/Output Unit

- **Tie-rod base manifold: SS5V3-W10S1□□□□D - Stations U D B (S, R, RS) C6, N7 C8, N9 C10, N11 (-D)**

(With 2 input blocks)

- When P, E port outlets are indicated on the U side or D side, the P, E ports on the opposite side are plugged.
- External pilot port positions and silencer discharge port positions are the same as P, E port outlet positions.

n1 = Valve stations
n2 = Input block stations

L2 = L1 – 10.5
L3 = 20.5 x n1 + 70.5
L4 = L3 + 81 + 21 x n2
L5 = (L1 – L4)/2
L6 = 20.5 x n1 + 56
L7 = 21 x n2 + 83.5

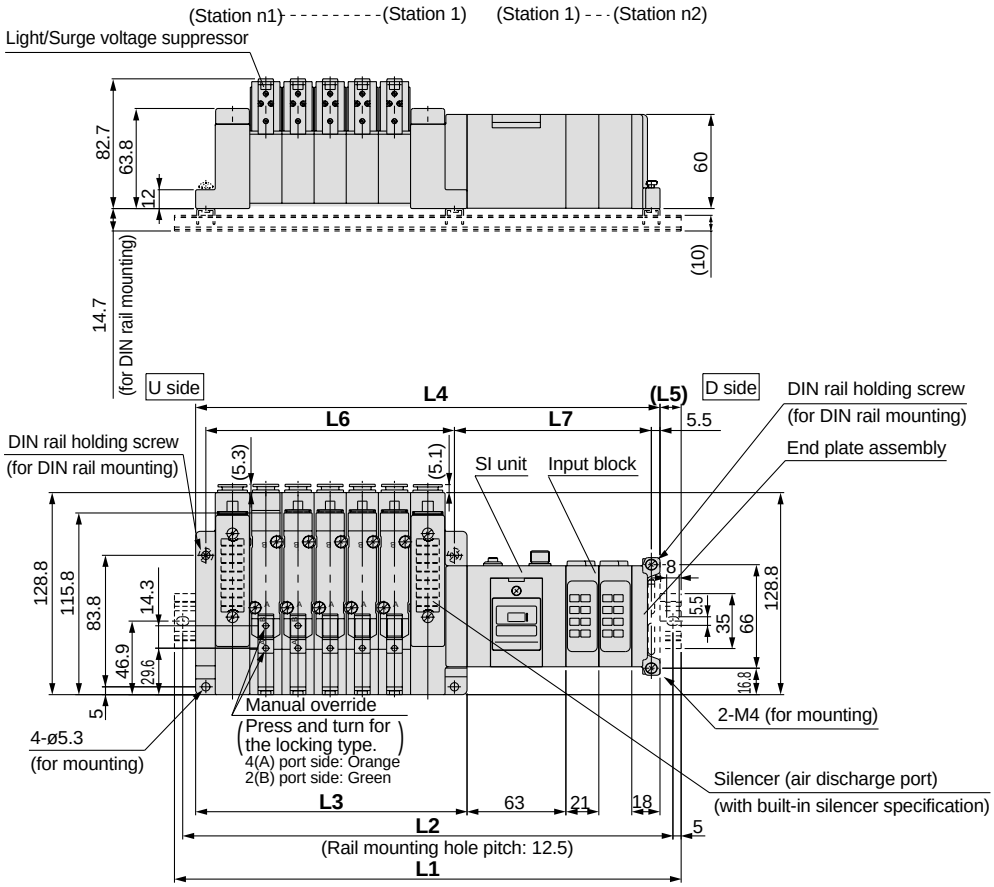

With external pilot specification

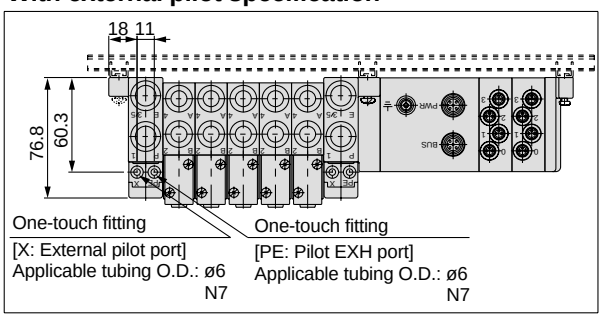

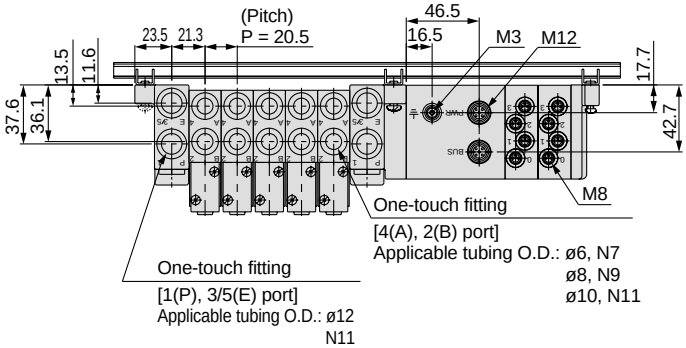

L1: DIN rail overall length

Input block stations (n2) \ Valve stations (n1)	2	3	4	5	6	7	8	9	10	11	12	13	14	15	16	17	18	19	20
0	223	248	260.5	285.5	298	323	348	360.5	385.5	410.5	423	448	473	485.5	510.5	535.5	548	573	585.5
1	248	260.5	285.5	310.5	323	348	360.5	385.5	410.5	423	448	473	485.5	510.5	535.5	548	573	585.5	610.5
2	260.5	285.5	310.5	323	348	360.5	385.5	410.5	423	448	473	485.5	510.5	535.5	548	573	598	610.5	635.5
3	285.5	310.5	323	348	373	385.5	410.5	423	448	473	485.5	510.5	535.5	548	573	598	610.5	635.5	648
4	310.5	323	348	373	385.5	410.5	423	448	473	485.5	510.5	535.5	548	573	598	610.5	635.5	660.5	673
5	323	348	373	385.5	410.5	435.5	448	473	485.5	510.5	535.5	548	573	598	610.5	635.5	660.5	673	698
6	348	373	385.5	410.5	435.5	448	473	485.5	510.5	535.5	548	573	598	610.5	635.5	660.5	673	698	723
7	373	385.5	410.5	435.5	448	473	498	510.5	535.5	548	573	598	610.5	635.5	660.5	673	698	723	735.5
8	385.5	410.5	435.5	448	473	498	510.5	535.5	548	573	598	610.5	635.5	660.5	673	698	723	735.5	760.5

Dedicated Output Serial Wiring

Series EX120

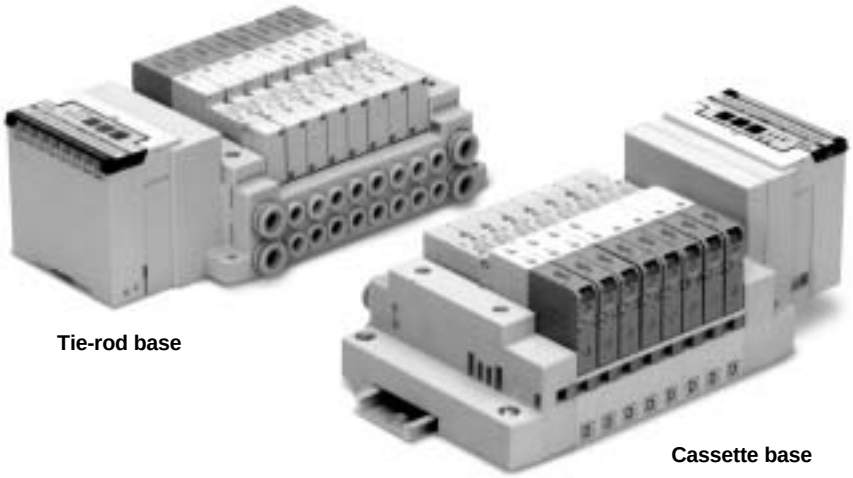

Applicable series	Cassette base manifold SV1000/SV2000
	Tie-rod base manifold SV1000/SV2000/SV3000/SV4000
	• Number of outputs: 16

EX120 Serial tranmission unit with output unit

Series SV

How to order

Mounting

–	Direct mount	
D	DIN rail mount (with DIN rail)	
D0 Note)	DIN rail mount (without DIN rail)	
D3	for 3 stations	When a DIN rail longer than the specified stations is required (specify a rail longer than the standard DIN rail)
⋮	⋮	
D16	for 16 stations	

Note) In case of D0, only rail fittings are attached.

Series

1	SV1000
2	SV2000
3	SV3000
4	SV4000

• **Tie-rod type**

SS5V 1 – 10S3 N D – 05 U □ – □ – □

• **Cassette type**

SS5V 1 – 16S3 N D – 05 U □ – □ – □

Series

1	SV1000
2	SV2000

SI unit

Symbol	Specification
0	Without SI unit
B	Mitsubishi Electric Corporation: MELSECNET/MINI-S3 Data Link System
C	OMRON Corporation: SYSBUS Wire System
N	PROFIBUS-DP, 16 outputs
P	Interbus S, 16 outputs
T2	AS-i, 8 outputs with external valve power supply
T4	AS-i, 4 outputs with external valve power supply
T5	AS-i, 4 outputs without external valve power supply
Y	CAN open, 16 outputs
V	Mitsubishi electric corporation: CC-Link
Q	Device Net, 16 outputs

The SI units T4 and T5 have 4 outputs available, therefore a maximum of 4 solenoids can be used.
The SI unit T2 has 8 outputs available, therefore a maximum of 8 solenoids can be used.
Other systems available on demand.

Valve stations

Symbol	Stations	Comments
02	2 Stations	Double wiring Note 1)
⋮	⋮	
08	8 Stations	
02	2 Stations	Specified layout (up to 16 solenoids possible) Note 2)
⋮	⋮	
16	16 Stations	

• This also includes the number of blanking plate assemblies.

Note 1) Double wiring: Single/double 5 port and dual 3 port solenoid valves can be used in all the stations of the manifold.
Use of a single solenoid valve will result in an unused control signal. If this is not desired, order with a specified layout.

Note 2) Specified layout: Indicate wiring specifications in the valve manofold configuration form.

P, E port position

U	U side (2 to 10 stations)
D	D side (2 to 10 stations)
B	Both sides (2 to 16 stations)

Supply/Exhaust block assembly

–	Internal pilot specification
S	Internal pilot / built in silencer
R	External pilot specification
RS	External pilot / built-in silencer

DIN rail length

-	Standard length	
3	for 3 stations	Specify a rail longer than the standard DIN rail.
⋮	⋮	
16	for 16 stations	

SI Unit part number

Symbol	Specification	for SS5V□-□□S3
B	Mitsubishi Electric Corporation: MELSECNET/MINI-S3 Data Link System	EX120-SMB1
C	OMRON Corporation: SYSBUS Wire System	EX120-STA1
N	PROFIBUS-DP	EX120-SPR1
P	Interbus S	EX120-SIB1
T2	AS-i, 8 outputs with external valve power supply	EX120-SAS2
T4	AS-i, 4 outputs with external valve power supply	EX120-SAS4
T5	AS-i, 4 outputs without external power supply	EX120-SAS5
Y	CAN open	EX120-SCA1
V	Mitsubishi electric corporation: CC-Link	EX120-SMJ1
Q	Device Net	EX120-SDN1

∗ Refer to pages 34 to 36 for LED descriptions and cable wiring etc. for each SI unit

How to Order Manifold Assemblies (Order Example)

Example (SV1000)

Manifold
SS5V1-16S3AD-06B-C6 (1 set)

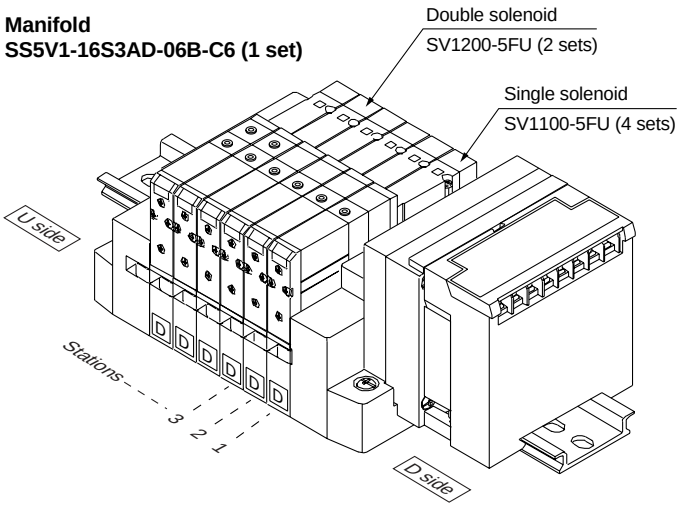

SS5V1-16S3AD-06B-C6 ..... 1 set (manifold part no.)
∗ SV1100-5FU ..... 4 sets (single solenoid part no.)
∗ SV1200-5FU ..... 2 sets (double solenoid part no.)

How to Order Solenoid Valves

SV 1 1 0 0 □ □ — 5 F □ □ — □

Note) Available with manifold block for station additions. Refer to pages 77 and 81.

Series

1	SV1000
2	SV2000
3	SV3000
4	SV4000

Type of actuation

1	2 position single solenoid
2	2 position double solenoid
3	3 position closed center
4	3 position exhaust center
5	3 position pressure center
A	4 position dual 3 port valve: N.C./N.C.
B	4 position dual 3 port valve: N.O./N.O.
C	4 position dual 3 port valve: N.C./N.O.

∗ 4 position dual 3 port valves are applicable to series SV1000 and SV2000 only.

Pilot specification

Nil	Internal pilot
R	External pilot

∗ External pilot specification is not available for 4 position dual 3 port valves.

Back pressure check valve

Nil	None
K	Built-in

∗ Built-in back pressure check valve type is applicable to series SV1000 only.
∗ Back pressure check valve is not available for 3 position closed center and 3 position pressure center.
∗ Flow rate with the built-in back pressure check valve is reduced approximately 20%.

Rated voltage

5	24VDC

Manual override

Nil: Non-locking push type	**D:** Slotted locking type

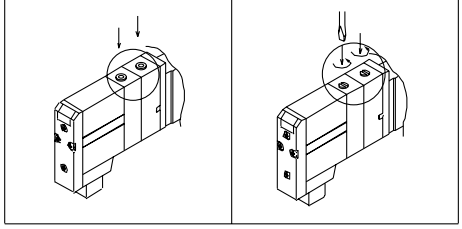

Light/Surge voltage suppressor

U	With light and surge voltage suppressor
R	With surge voltage suppressor

A, B port size (metric)

Symbol	A, B port	P, E port	Applicable series
C3	ø3.2 One-touch fitting	ø8 One-touch fitting	SV1000
C4	ø4 One-touch fitting		
C6	ø6 One-touch fitting		
C4	ø4 One-touch fitting	ø10 One-touch fitting	SV2000
C6	ø6 One-touch fitting		
C8	ø8 One-touch fitting		
C6	ø6 One-touch fitting	ø12 One-touch fitting	SV3000
C8	ø8 One-touch fitting		
C10	ø10 One-touch fitting		
C8	ø8 One-touch fitting	ø12 One-touch fitting	SV4000
C10	ø10 One-touch fitting		
C12	ø12 One-touch fitting		
02	Rc 1/4	Rc 3/8	
03	Rc 3/8		
02F	G 1/4	G 3/8	
03F	G 3/8		
M	A, B ports mixed		

A, B port size (inch)

Symbol	A, B port	P, E port	Applicable series
N1	ø1/8" One-touch fitting	ø5/16" One-touch fitting	SV1000
N3	ø5/32" One-touch fitting		
N7	ø1/4" One-touch fitting		
N3	ø5/32" One-touch fitting	ø3/8" One-touch fitting	SV2000
N7	ø1/4" One-touch fitting		
N9	ø5/16" One-touch fitting		
N7	ø1/4" One-touch fitting	ø3/8" One-touch fitting	SV3000
N9	ø5/16" One-touch fitting		
N11	ø3/8" One-touch fitting		
N9	ø5/16" One-touch fitting	ø3/8" One-touch fitting	SV4000
N11	ø3/8" One-touch fitting		
02N	NPT 1/4	NPT 3/8	
03N	NPT 3/8		
02T	NPTF 1/4	NPTF 3/8	
03T	NPTF 3/8		
M	A, B ports mixed		

∗ In case of mixed specification (M), indicate separately on a manifold specification sheet.

■ The serial data transmission system reduces connection work, while also minimizing wiring cost and save space.
■ 16 stations or less (As desired, introduce the specific layout in a valve manifold specification form.)

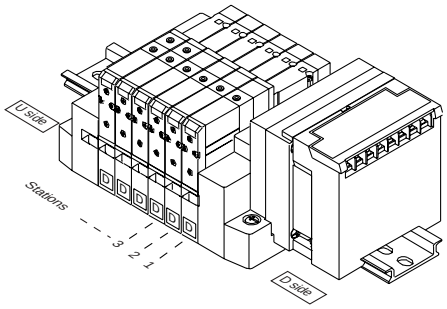

• The stations are counted starting out from the D side.
• A maximum of 16 solenoids are permitted
(16 stations with single solenoid valves).

Type N, Profibus-DP

Description of LED display

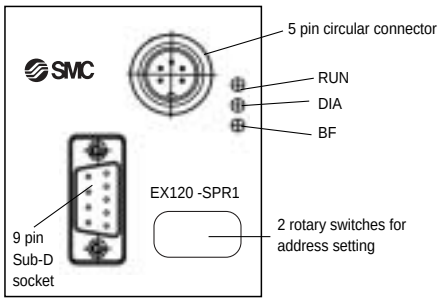

LED	Status (after configuration)	Description
RUN	Green	Power supply (+24VDC) for the SI unit is present, and valves drivers protection fuses are intact.
	OFF	Power supply absent or fuses blown.
DIA	Red	SI unit circuit failure.
	OFF	No error.
BF	Red	Bus error. A bus communication cycle was not realised in the time set by control parameters.
	OFF	No error.

Remarks

• Line structure
• Termination resistor necessary
• Transmission rate 1500 kbit/s or less (automatic baud rate recognition)
• max. bus cable length 1200m (without repeater)
• 16 outputs
• 12000 kbit/s on demand

Wiring

Communication connector

9 pin
sub-D socket

1	Shield	Shield/ Protective earth
2	GND 24	no connection (reserved for 24VDC supply ground line)
3	RxD/TxD-P	Reception / transmission data
4	RTS	(Ready to send)
5	DGND	Digital ground (Digital ground)
6	VP	+ 5VDC supply for terminating resistors
7	P24	No connection (reserved for 24VDC supply line)
8	RxD/TxD	Reception/transmission N line, also termed "data line A"
9	CNTR-N	No connected (reserved for the repeater control/directional control signals)

Power supply

5 pin circular connector
(DIN 45322)

Pin 1	+24V +/-10%	Valves power supply
Pin 2	0V	0V SI unit
Pin 3	PE	Ground connection (Protective earth)
Pin 4	+24V +/-10%	SI unit power supply
Pin 5	0V	Solenoid valves

Example of the female connector: Franz binder GmbH: 09-0314-00-05

Type P, Interbus-S

Description of LED display

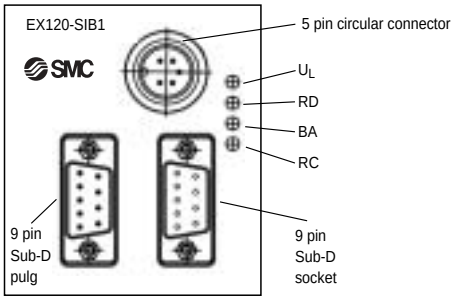

LED status	Colour	Description
UL (Voltage load)	Green	Indicates whether both power supplies for electronics and the valves (each +24VDC) are connected. LED illuminates: - Both 24V power supplies are correct. LED OFF: - At least one of these power supplies is not correct.
RD (Remote bus Disabled)	Red	Indicates whether the output interface to the fielbus (starting from the master) is active. LED illuminates: - The output interface to the fielbus is not active. LED OFF: - The output interface is active.
BA (Bus active)	Green	Indicates whether data transmission via Interbus-S is in progress or has been interrupted. LED illuminates: - Data transmission in progress. LED OFF: - Data transmission interrupted.
RC (Remote bus Check)	Green	Indicates whether the remote bus's cable connection to the previous SI unit is correct (count direction from the master): LED illuminates: - Cable connection is correct. LED OFF: - The cable connection is interrupted.

Remarks

• Ring structure
• No termination resistor necessary
• Fixed transmission rate 500kbit/s
• max. distance between two bus nodes 400 m (max. bus lenght 12.8Km)
• 16 outputs

Wiring

Communication connector

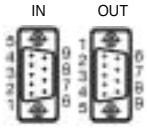

Plug Coupling
9 pin Sub-D

Pin no.	Remote IN (Module input)	Remote OUT (Module output)	Description
1	DO1+	DO2+	Data reception line "Plus"
2	DI1+	DI2+	Data transmission line "Plus"
3	GND1	GND2	Signal ground
4			No connection
5		+5V	+5 V output for transfer line Pin 9
6	DO1-	DO2-	Data reception line "Minus"
7	DI1-	DI2-	Data transmission line "Minus"
8			No connection
9		RBST	Transfer line to the next bus member

Power supply

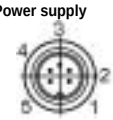

5 pin circular connector (DIN 45322)

Pin 1	+24V +/-10%	Valves power supply
Pin 2	0V	0V SI unit
Pin 3	PE	Ground connection (Protective earth)
Pin 4	+24V +/-10%	SI unit power supply
Pin 5	0V	Solenoid valves

Example of the female connector: Franz binder GmbH: 09-0314-00-05

For detailed information please refer to our instructions manual

	Type T2	Type T4	Type T5
	AS-i		

Description of components

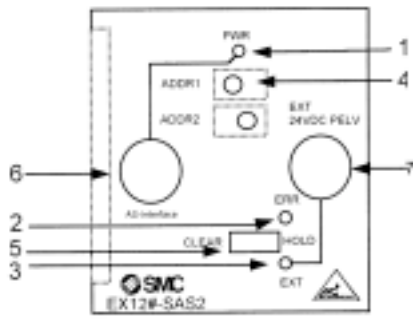

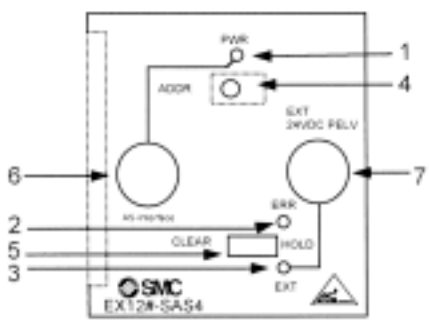

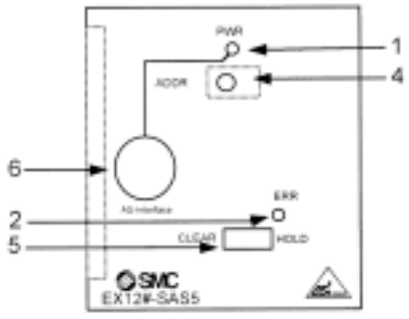

Pos.	Component:	Description:
1	green PWR LED	green LED for AS Interface's power supply (yellow cable)
2	red ERR LED	red LED for communication error (Watch-Dog)
3	green EXT LED (only EX120-SAS2/4)	green LED for valve power supply (24VDC PELV)
4	ADDR socket (ADDR2 only in T2)	Socket for AS-i handheld programming device for address setting ADDR1: for As-i slave 1 / solenoid outputs 0, 1, 2 and 3 ADDR2: for AS-i slave 2 / solenoid outputs 4, 5, 6 and 7
5	CLEAR/HOLD-Switch	CLEAR: all valves are switched OFF in case of communication error. HOLD: all the valves remain in their current ON/OFF position in ase of communication error.
6	AS-interface-Connection for the yellow cable (left)	Connector for communication AS-i yellow ribbon cable.
7	Connection for the black cable (right) (only EX120-SAS2/4)	Connector for external +24VDC power supply cable for the valves.

Remarks

- free structure: line, tree or star.
- no termination resistors needed.
- no baud rate settings.
- max. bus cable length: 100m (300m wit repeaters).

Type T2	Type T4	Type T5
• 8 outputs with additional valve power supply	• 4 outputs with additional valve power supply	• 4 outputs without additional valve power supply

Wiring

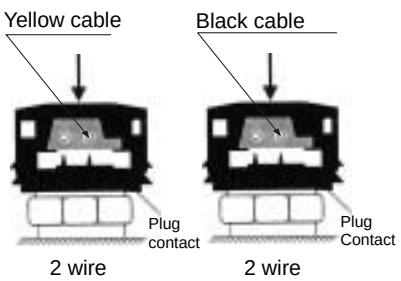

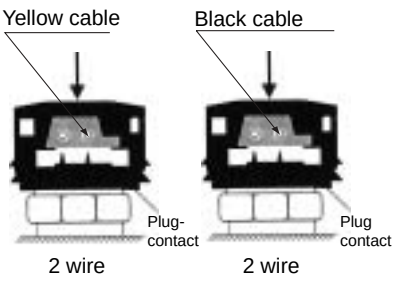

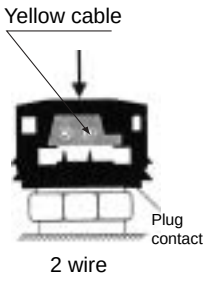

For detailed information, please refer to our instructions manual

Description of components / LED

Type Y, CAN open

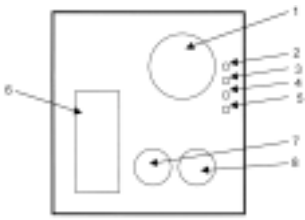

Pos.	Component / description
1	5 pin circular connector according to DIN45322 for the power supply
2	PWR LED (green) for the SI unit power supply
3	BUS LED (green, red, orange) multi purpose display
4	ERR LED (red) short circuit in one or more outputs
5	U_L (green) for the valves power supply (load)
6	9 pin D sub connector for the network connection (CAN bus)
7	Node-ID, high significant position (H, high significant), decimal
8	Node-ID, low significant position (L, low significant), decimal

Type Q, DeviceNet

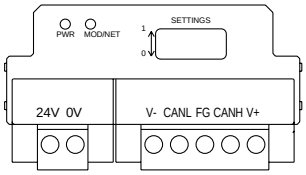

LED		Description
PWR		Green LED illuminates during power supply of DeviceNet circuit
MOD/NET	OFF	The unit is not on-line, or the power supply is OFF
	green blinks	The unit is on line but waiting for connection
	green illumin.	When the connection is established (on-line)
	red blinks	Recoverable error. The I/O connection has timed out
	red illumin.	Unrecoverable error. MAC ID duplication error or BUSOFF error

Comments

- Line structure
- Termination resistor needed
- Corresponds to CiA DS-301 and CiA DS-401
- Max. transmission rate 1000kbit/s
- max. bus cable length: 1000m
- 16 outputs

- Line structure
- Termination resistor necessary
- Max. transmission rate 500kbit/s (no automatic baud rate recognition)
- max. bus cable length: 500m
- 16 outputs

Wiring

Communication connector

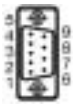

9 pin Sub-D connector

Pin. no.	Signal designation	Description
1	---	reserved
2	CAN_L	CAN_L bus line (dominant low)
3	CAN_GND	CAN Ground
4	---	reserved
5	(CAN_SHLD)	optional CAN-Shield
6	(GND)	optional CAN-Ground
7	CAN_H	CAN_H Bus line (dominant high)
8	---	reserved (line error)
9	(CAN_V+)	optional power supply (e.g. for transceiver and optocoupler during the electrical isolation of bus nodes — not supported by the SI unit)

The signals which are not in brackets should at least be connected (mandatory CAN signals). 9 pin D sub connector: corresponding to DIN41652. Pins 3 and 6 should be connected within the module. In T connectors and other devices with two ports all pins should be connected with the same number.

Power supply

5 pin circular connector (DIN 45322)
Example of the female connector:
Franz binder GmbH: 09-0314-00-05

Pin 1	+24V +/-10%	Valves power supply
Pin 2	0V	0V SI unit
Pin 3	PE	Ground connection (Protective earth)
Pin 4	+24V +/-10%	SI unit power supply
Pin 5	0V	Solenoid valves

Communication connector

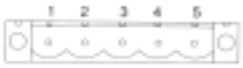

Pin no.	Description
1	V- (black)
2	CAN_L (blue)
3	Shield
4	CAN_H (white)
5	V+ (red)

1) Colour code corresponds to DeviceNet guidelines

Valves power supply

Pin no.	Description
1	+24VDC ±10%
2	0VDC

Individually adaptable connectors are included in the delivery.

For detailed information, please refer to our instructions manual

Terminal block LED description

Type B
Mitsubishi Electric Corporation
MELSECNET/MINI-S3 Data Link System

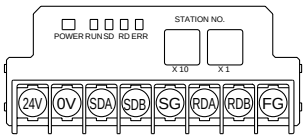

LED name	Description
POWER	ON for power supply Input
RUN	ON for normal data traffic with master unit
RD	ON during data reception
SD	ON during data transmission
ERR	ON for data reception error, OFF when normal

Type C
OMRON Corporation
SYSBUS Wire System

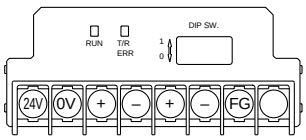

LED name	Description
RUN	ON when transmission is normal and PLC is in operation mode
T/R ERR	Blinks when transmission is normal ON when transmission is abnormal

Type V
Mitsubishi Electric Corporation
CC-Link

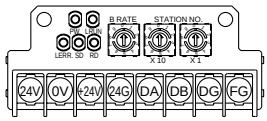

LED name	Description
PW	ON when communication power is supplied, OFF when power is OFF
L RUN	ON when normal data is being received
SD	ON when data is transmitted
RD	ON when data is received
L ERR.	ON for transmission error/wrong setting, Blinks when station or transmission speed setting changes during operation

Note

- MELSECNET/MINI-S3 Data Link System
  Master unit: AJ71PT32-S3
  AJ71T32-S3
  A1SJ71PT32-S3
- 16 outputs, occupying two stations

- SYSBUS Wire System
  Master unit: Type C500-RM201
  Type C200H-RM201
- 16 outputs

- CC-Link System
  Master unit: AJ61BT11
  A1SJ61BT11
  AJ61QBT11
  A1SJ61QBT11
- 16 outputs

Cable wiring

SI manifold solenoid valve

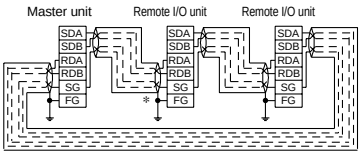

∗ Ground either the reception side or the transmission side of the shielding wire shield.

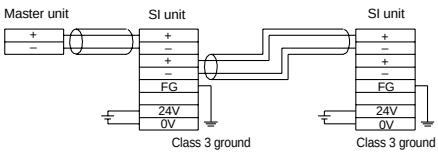

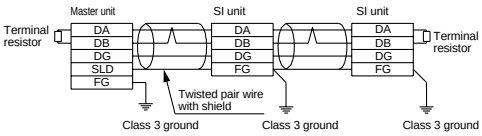

Dimensions: Series SV1000 for EX120 Dedicated Output Serial Transmission Unit

• **Cassette base manifold: SS5V1-16S3□D - stations U/D/B (S, R, RS) - C3, N1 / C4, N3 / C6, N7**

• When P, E ports are specified on the U or D side, the P, E ports on the opposite side are plugged.
• External pilot port positions and silencer discharge port positions correspond to the P, E port outlet positions.

Note 1):
The dimensions layouts correspond to version B, C and Q.
In all other bus systems the SI unit is 24.3 mm longer.

Note 2):
For the below listed SI units the overall SI unt height is higher due to the connector sockets used.

Specification	Version	Height
Profibus	**N**	14 mm longer
Interbus	**P**	
CANopen	**Y**	
AS-i	**T2, T4, T5**	22,5 mm longer

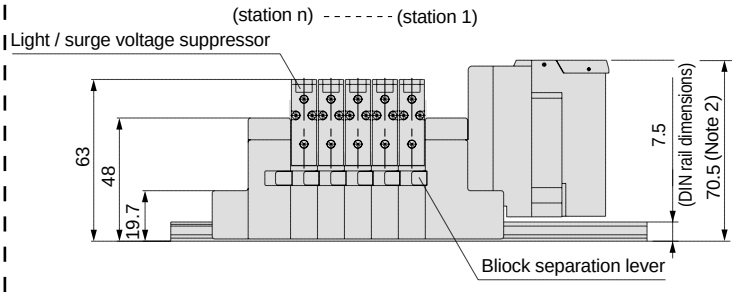

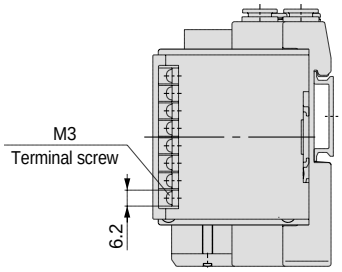

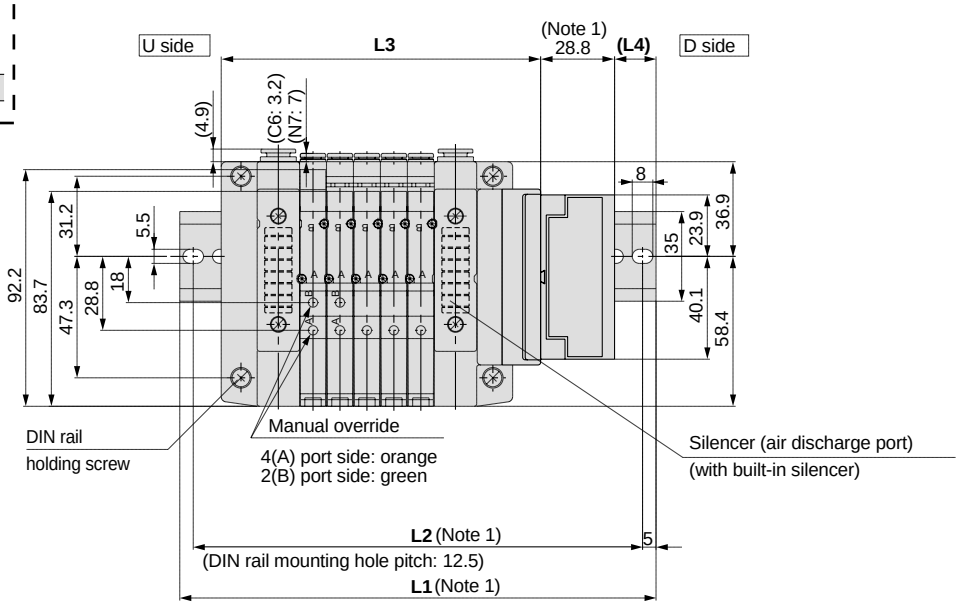

[with external pilot specification]

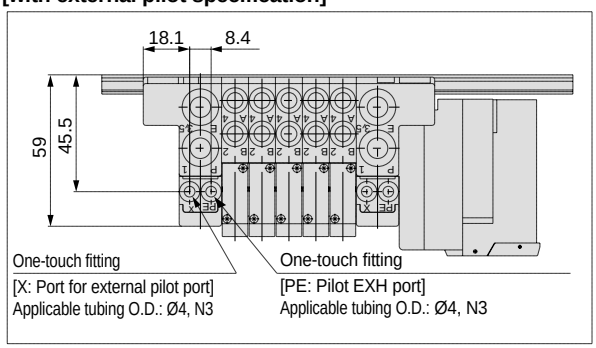

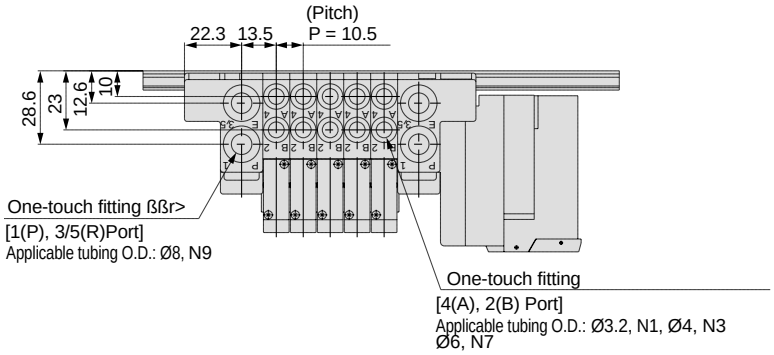

L-Dimensions

n: stations

	L \ n	2	3	4	5	6	7	8	9	10	11	12	13	14	15	16
(Note 1)	**L1**	148	160.5	173	185.5	198	198	210.5	223	235.5	248	260.5	260.5	273	285.5	298
(Note 1)	**L2**	137.5	150	162.5	175	187.5	187.5	200	212.5	225	237.5	250	250	262.5	275	287.5
	L3	92.9	103.4	113.9	124.4	134.9	145.4	155.9	166.4	176.9	187.4	197.9	208.4	218.9	229.4	239.9
	L4	13	14	15	16	17	12	13	14	15	16	17	11.5	12.5	13.5	14.5

Dimensions: Series SV2000 for EX120 Dedicated Output Serial Wiring

• **Cassette base manifold: SS5V2-16S3□D - Stations U/D/B (S, R, RS) - C4, N3 / C6, N7 / C8, N9**

• When P, E port outlets are indicated on the U side or D side, the P, E ports on the opposite side are plugged.
• External pilot port positions and silencer discharge port positions are the same as P, E port outlet positions.

Note 1):
The dimensions layouts correspond to version B, C and Q.
In all other bus systems the SI unit is 24.3 mm longer.

Note 2):
For the below listed SI units the overall SI unt height is higher due to the connector sockets used.

Specification	Version	Height
Profibus	**N**	14 mm longer
Interbus	**P**	
CANopen	**Y**	
AS-i	**T2, T4, T5**	22,5 mm longer

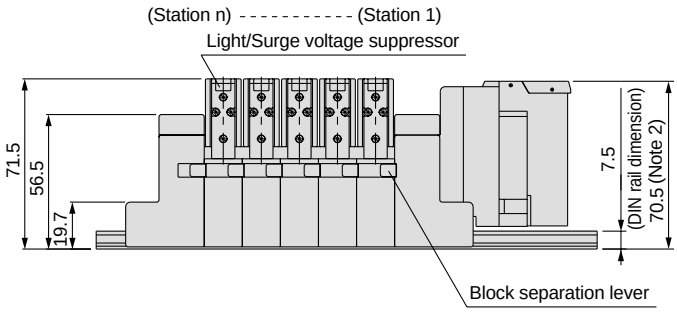

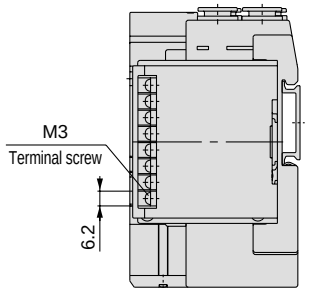

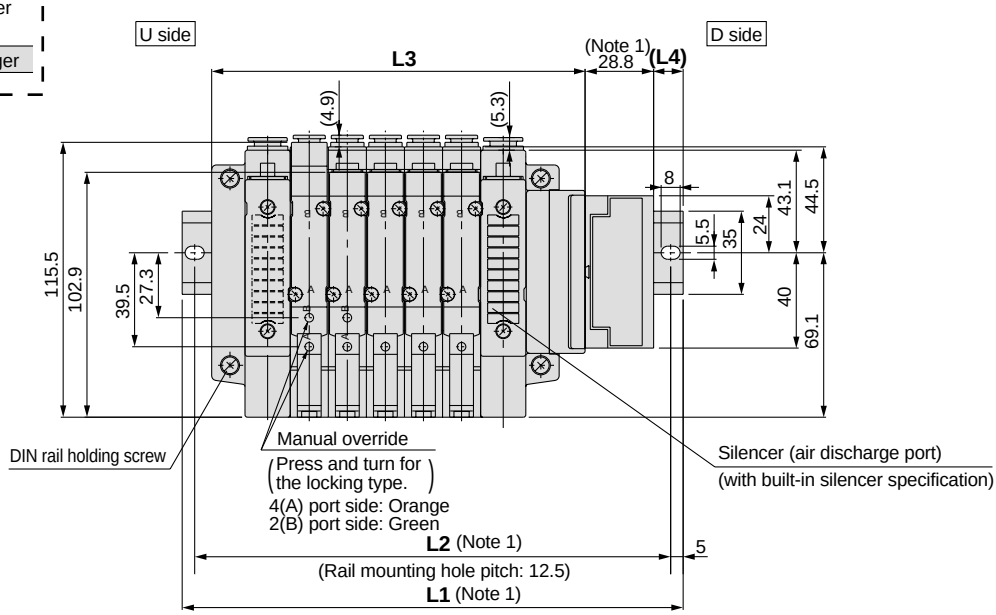

With external pilot specification

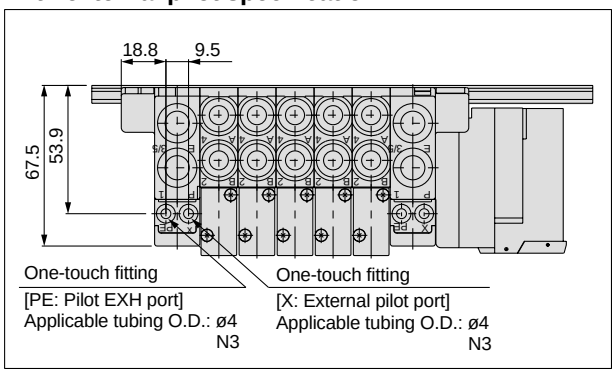

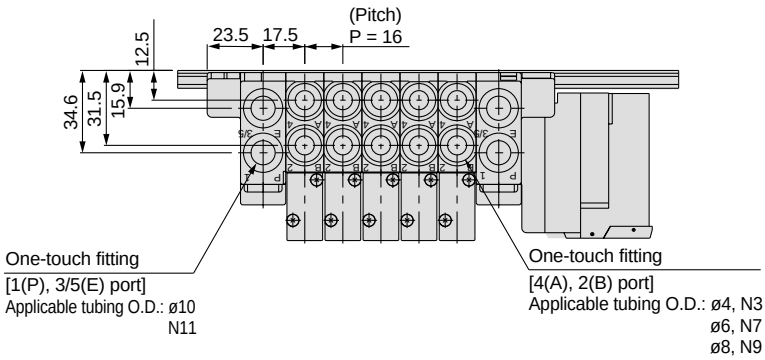

L dimensions

n: Stations

	L \ n	2	3	4	5	6	7	8	9	10	11	12	13	14	15	16
(Note 1)	**L1**	173	185.5	198	210.5	235.5	248	260.5	273	298	310.5	323	348	360.5	373	385.5
(Note 1)	**L2**	162.5	175	187.5	200	225	237.5	250	262.5	287.5	300	312.5	337.5	350	362.5	375
	L3	108.9	124.9	140.9	156.9	172.9	188.9	204.9	220.9	236.9	252.9	268.9	284.9	300.9	316.9	332.9
	L4	17.5	16	14	12.5	17	15	13.5	11.5	16	14.5	12.5	17	15.5	13.5	12

Dimensions: Series SV1000 for EX120 Dedicated Output Serial Wiring

• **Tie-rod base manifold: SS5V1-10S3□D - Stations U/D/B (S, R, RS) - C3, N1 / C4, N3 / C6, N7 (-D)**

• When P, E port outlets are indicated on the U side or D side, the P, E ports on the opposite side are plugged.
• External pilot port positions and silencer discharge port positions are the same as P, E port outlet positions.

Note 1):
The dimensions layouts correspond to version B, C and Q.
In all other bus systems the SI unit is 24.3 mm longer.

Note 2):
For the below listed SI units the overall SI unt height is higher due to the connector sockets used.

Specification	Version	Height
Profibus	**N**	14 mm longer
Interbus	**P**	
CANopen	**Y**	
AS-i	**T2, T4, T5**	22,5 mm longer

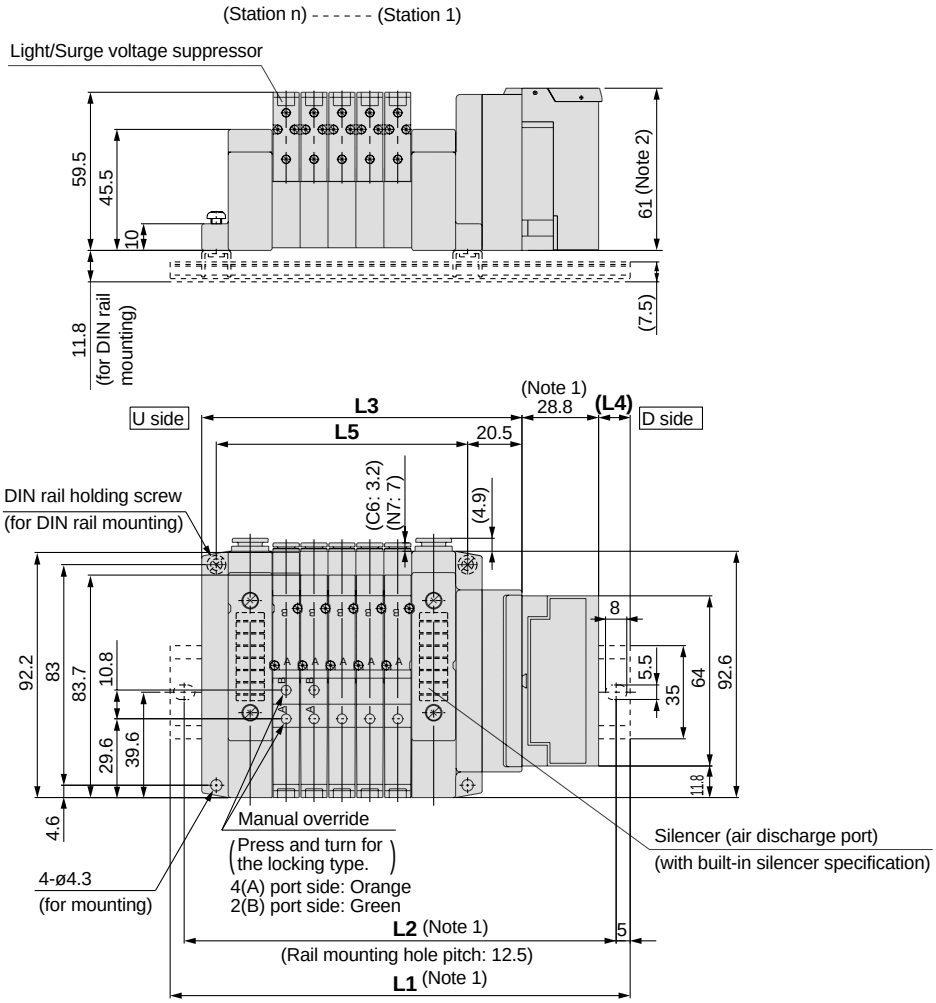

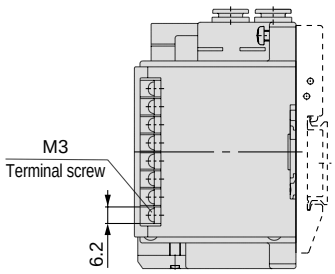

With external pilot specification

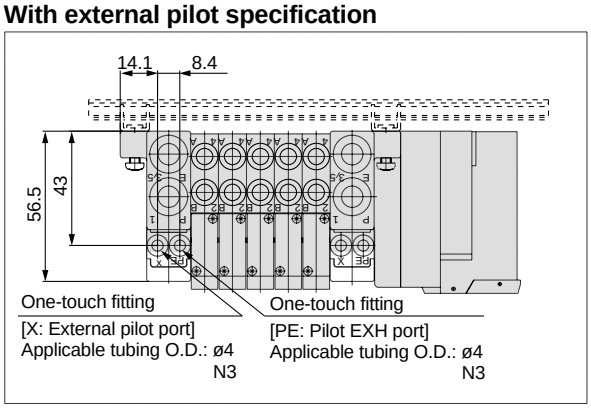

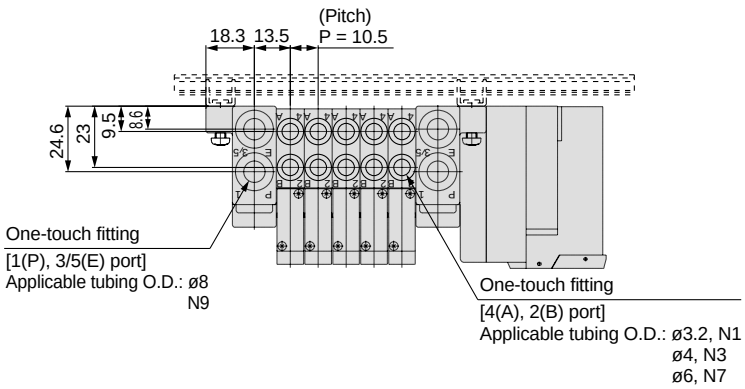

L dimensions

n: Stations

	L \ n	2	3	4	5	6	7	8	9	10	11	12	13	14	15	16
(Note 1)	**L1**	148	160.5	173	173	185.5	198	210.5	223	235.5	235.5	248	260.5	273	285.5	298
(Note 1)	**L2**	137.5	150	162.5	162.5	175	187.5	200	212.5	225	225	237.5	250	262.5	275	287.5
	L3	89	99.5	110	120.5	131	141.5	152	162.5	173	183.5	194	204.5	215	225.5	236
	L4	15	16	17	12	13	14	15	16	17	11.5	12.5	13.5	14.5	15.5	16.5
	L5	63	73.5	84	94.5	105	115.5	126	136.5	147	157.5	168	178.5	189	199.5	210

Dimensions: Series SV2000 for EX120 Dedicated Output Serial Wiring

• **Tie-rod base manifold: SS5V2-10S3□D - Stations U/D/B (S, R, RS) - C4, N3 / C6, N7 / C8, N9 (-D)**

• When P, E port outlets are indicated on the U side or D side, the P, E ports on the opposite side are plugged.
• External pilot port positions and silencer discharge port positions are the same as P, E port outlet positions.

Note 1):
The dimensions layouts correspond to version B, C and Q.
In all other bus systems the SI unit is 24.3 mm longer.

Note 2):
For the below listed SI units the overall SI unt height is higher due to the connector sockets used.

Specification	Version	Height
Profibus	**N**	14 mm longer
Interbus	**P**	
CANopen	**Y**	
AS-i	**T2, T4, T5**	22,5 mm longer

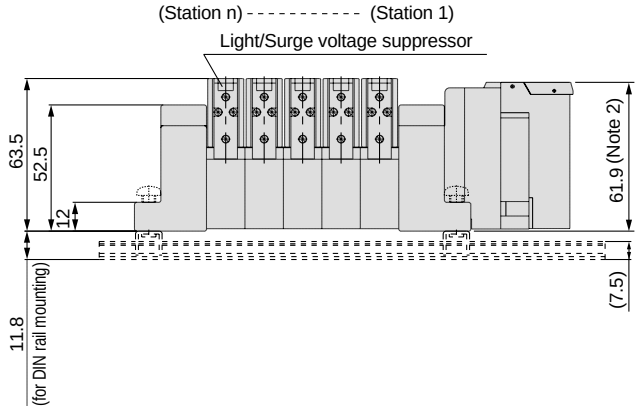

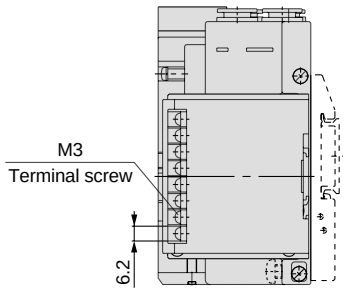

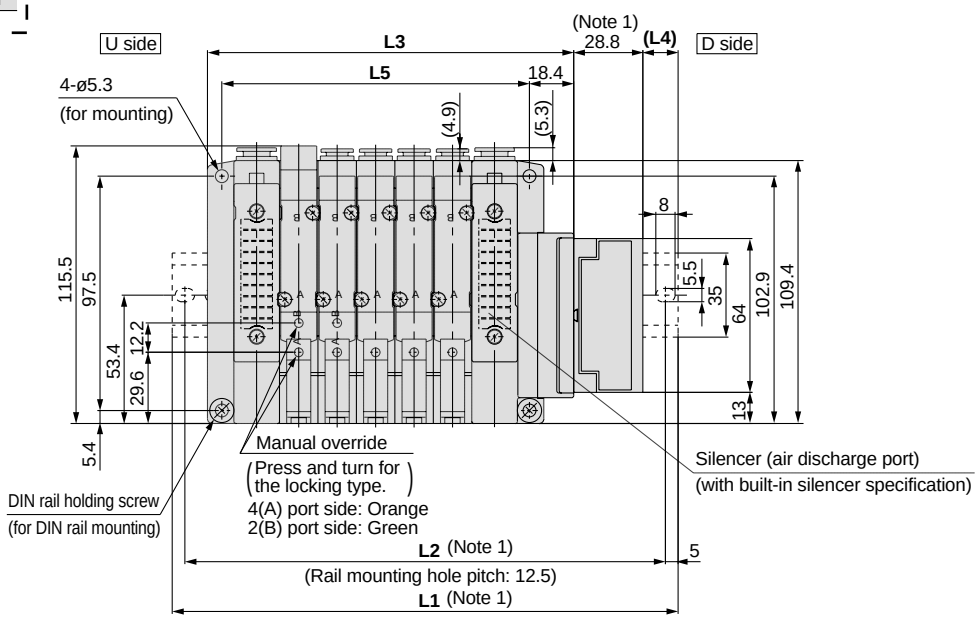

With external pilot specification

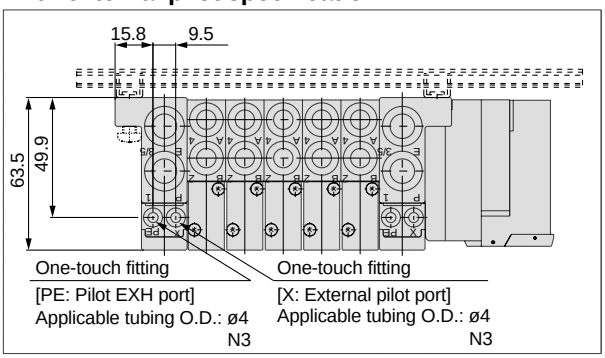

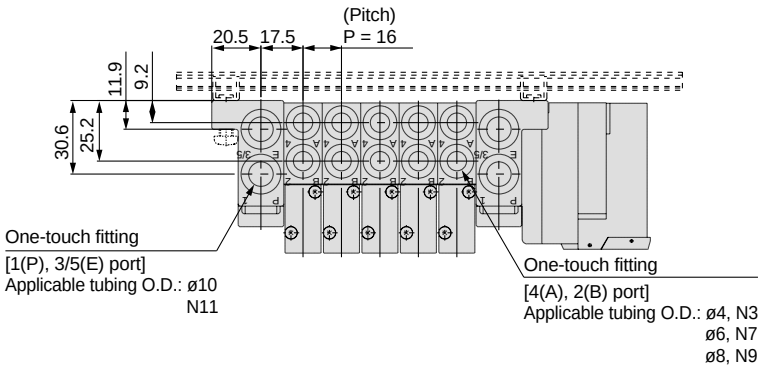

L dimensions

n: Stations

	L \ n	2	3	4	5	6	7	8	9	10	11	12	13	14	15	16
(Note 1)	**L1**	160.5	173	198	210.5	223	248	260.5	273	285.5	310.5	323	335.5	360.5	373	385.5
(Note 1)	**L2**	150	162.5	187.5	200	212.5	237.5	250	262.5	275	300	312.5	325	350	362.5	375
	L3	104.4	120.4	136.4	152.4	168.4	184.4	200.4	216.4	232.4	248.4	264.4	280.4	296.4	312.4	328.4
	L4	13.5	12	16.5	14.5	13	17.5	15.5	14	12	16.5	15	13	17.5	16	14
	L5	80	96	112	128	144	160	176	192	208	224	240	256	272	288	304

Dimensions: Series SV3000 for EX120 Dedicated Output Serial Wiring

• **Tie-rod base manifold: SS5V3-10S3□D - Stations U/D/B (S, R, RS) - C6, N7 / C8, N9 / C10, N11 (-D)**

• When P, E port outlets are indicated on the U side or D side, the P, E ports on the opposite side are plugged.
• External pilot port positions and silencer discharge port positions are the same as P, E port outlet positions.

Note 1):
The dimensions layouts correspond to version B, C and Q.
In all other bus systems the SI unit is 24.3 mm longer.

Note 2):
For the below listed SI units the overall SI unt height is higher due to the connector sockets used.

Specification	Version	Height
Profibus	**N**	14 mm longer
Interbus	**P**	
CANopen	**Y**	
AS-i	**T2, T4, T5**	22,5 mm longer

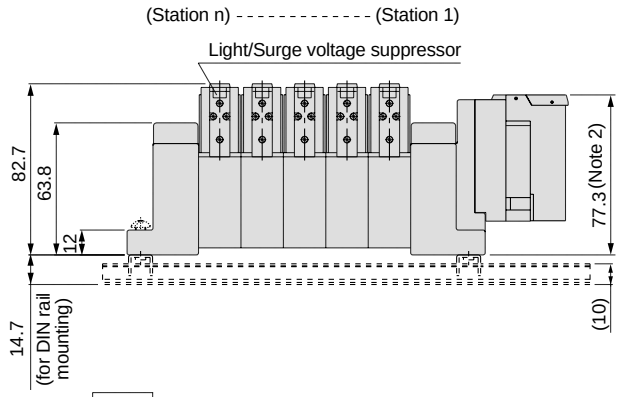

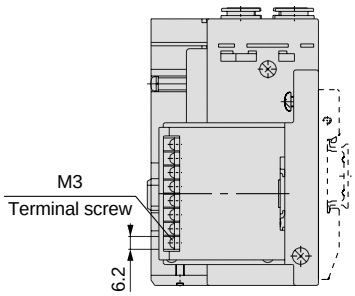

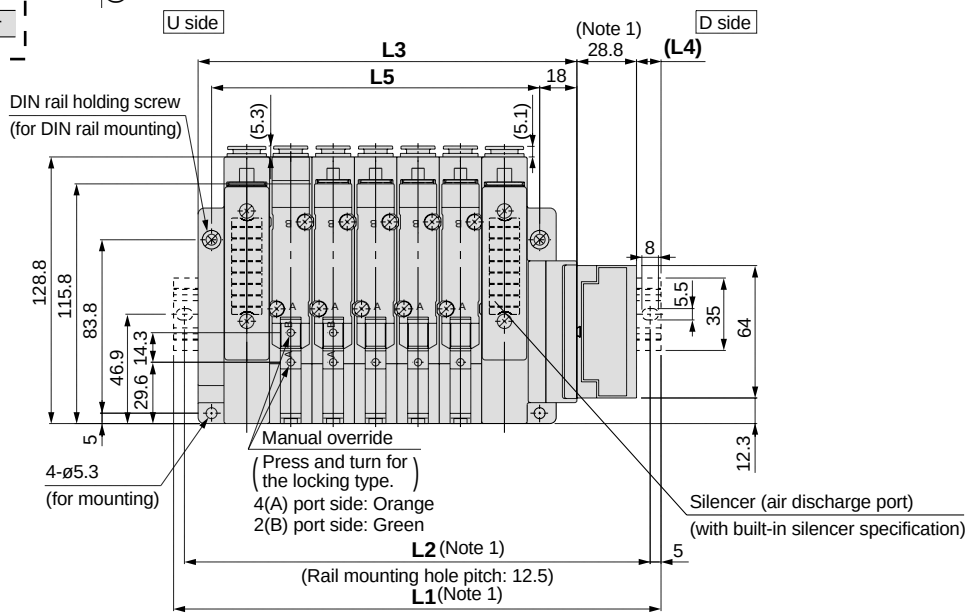

With external pilot specification

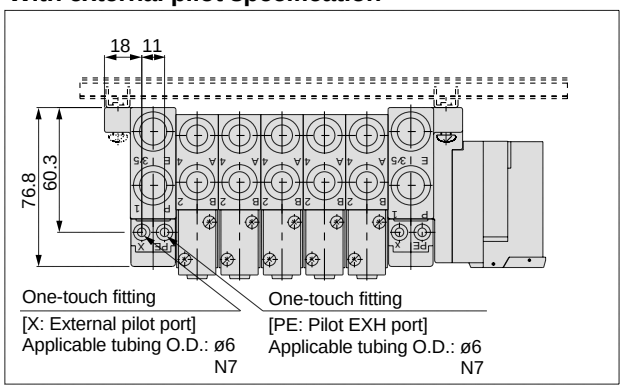

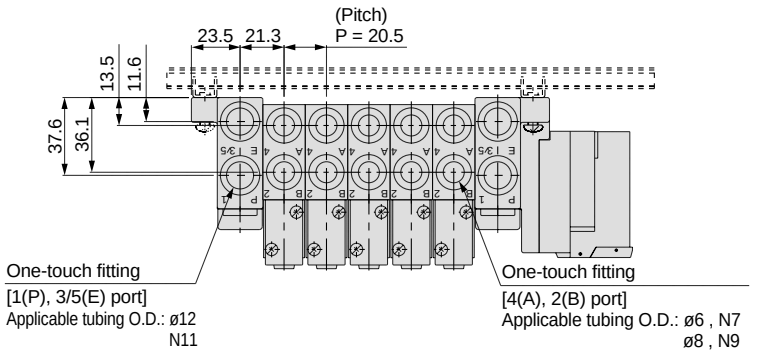

L dimensions

n: Stations

	L \ n	2	3	4	5	6	7	8	9	10	11	12	13	14	15	16
(Note 1)	**L1**	185.5	198	223	235.5	260.5	285.5	298	323	348	360.5	385.5	410.5	423	448	460.5
(Note 1)	**L2**	175	187.5	212.5	225	250	275	287.5	312.5	337.5	350	375	400	412.5	437.5	450
	L3	121.5	142	162.5	183	203.5	224	244.5	265	285.5	306	326.5	347	367.5	388	408.5
	L4	17.5	13.5	16	12	14	16.5	12.5	14.5	17	13	15	17.5	13.5	15.5	11.5
	L5	97	117.5	138	158.5	179	199.5	220	240.5	261	281.5	302	322.5	343	363.5	384

Dimensions: Series SV4000 for EX120 Dedicated Output Serial Wiring

• **Tie-rod base manifold: SS5V4-10S3□D - Stations U/D/B (S, R, RS) - 02, 03, C8, C10, C12, N9, N11 (-D)**

• When P, E port outlets are indicated on the U side or D side, the P, E ports on the opposite side are plugged.
• External pilot port positions and silencer discharge port positions are the same as P, E port outlet positions.

Note 1):
The dimensions layouts correspond to version B, C and Q.
In all other bus systems the SI unit is 24.3 mm longer.

Note 2):
For the below listed SI units the overall SI unt height is higher due to the connector sockets used.

Specification	Version	Height
Profibus	**N**	14 mm longer
Interbus	**P**	
CANopen	**Y**	
AS-i	**T2, T4, T5**	22,5 mm longer

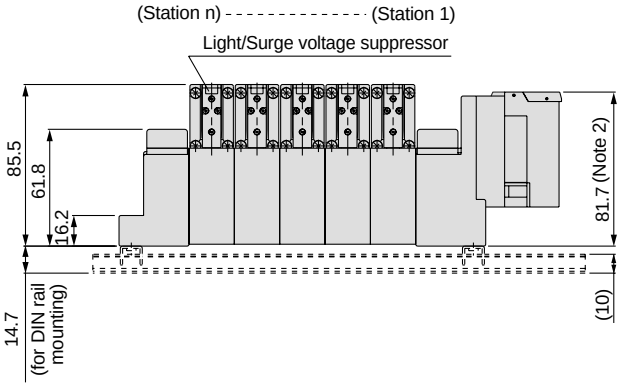

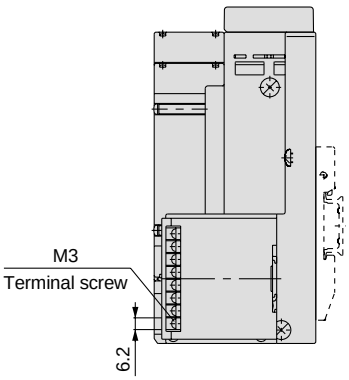

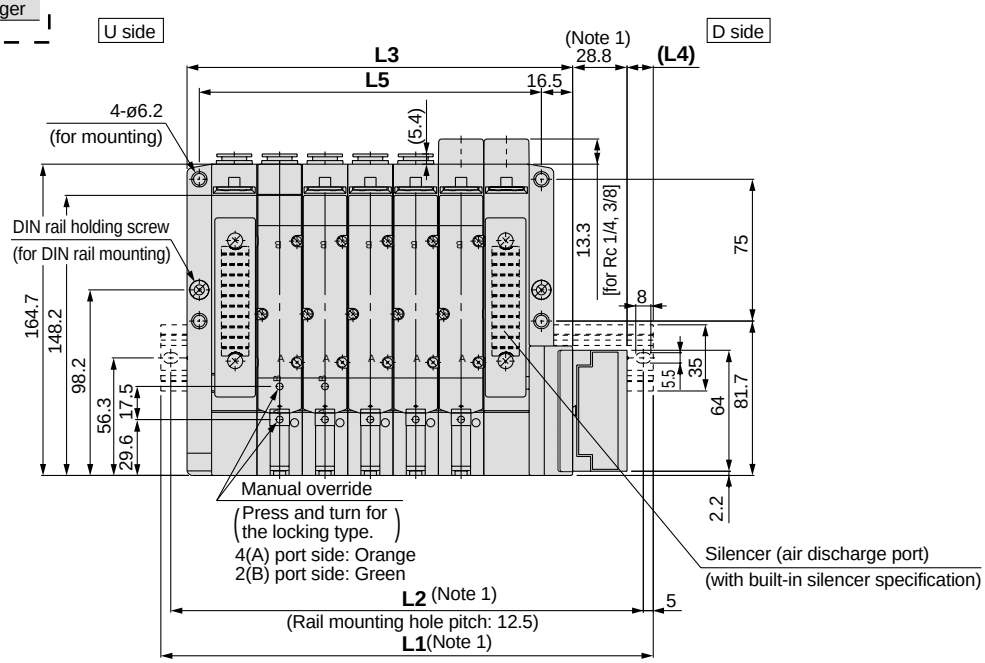

With external pilot specification

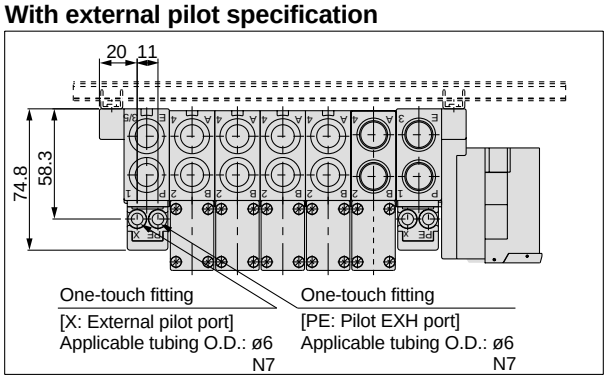

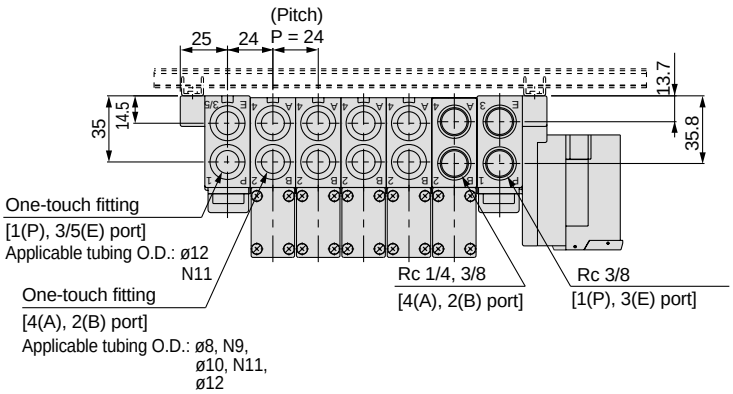

L dimensions

n: Stations

	L \ n	2	3	4	5	6	7	8	9	10	11	12	13	14	15	16
(Note 1)	**L1**	185.5	210.5	235.5	260.5	285.5	310.5	335.5	360.5	385.5	410.5	435.5	448	473	498	523
(Note 1)	**L2**	175	200	225	250	275	300	325	350	375	400	425	437.5	462.5	487.5	512.5
	L3	132	156	180	204	228	252	276	300	324	348	372	396	420	444	468
	L4	12.5	13	13.5	14	14.5	15	15.5	16	16.5	17	17.5	11.5	12	12.5	13
	L5	109	133	157	181	205	229	253	277	301	325	349	373	397	421	445

Circular Connector

IP67 protection

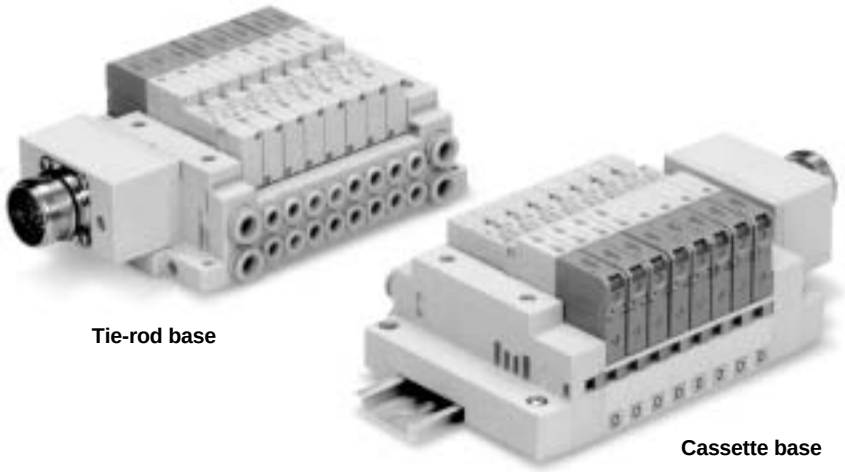

Applicable series	Cassette base manifold SV1000/SV2000
	Tie-rod base manifold SV1000/SV2000/SV3000/SV4000
	• Number of connectors: 26 pins

Circular Connector
Series SV

How to Order

• Tie-rod base

SS5V 1 — W 10CD — 05 U □ — □ — □

• Cassette base

SS5V 1 — W 16CD — 05 U □ — □ — □

Series

1	SV1000
2	SV2000
3	SV3000
4	SV4000

Valve stations

Symbol	Stations	Note
02	2 stations	Double wiring specification (Note 1)
⋮	⋮	
12	12 stations	
02	2 stations	Specified layout (Up to 24 solenoids possible.) (Note 2)
⋮	⋮	
20	20 stations	

Note 1) Double wiring specification: Single, double and 3 position solenoid valves can be used on all manifold stations.
Use of a single solenoid will result in an unused control signal. If this is not desired, order with a specified layout.

Note 2) Specified layout: Indicate wiring specifications on a manifold specification sheet.
(Note that double and 3 position valves cannot be used where single solenoid wiring has been specified.)

Mounting

Nil	Direct mount	
D	DIN rail mount (with DIN rail)	
D0 Note)	DIN rail mount (without DIN rail)	
D3	For 3 stations	When a DIN rail longer than the specified stations is required. (Specify a rail longer than the standard length.)
⋮	⋮	
D20	For 20 stations	

Note) In case of D0, only DIN rail fittings are attached.

DIN rail length

Nil	Standard length	
3	For 3 stations	Specify a rail longer than the standard length.
⋮	⋮	
20	For 20 stations	

Series

1	SV1000
2	SV2000

Enclosure IP67 specification

Valve stations

Series SV1000

Symbol	Stations	Note
02	2 stations	Double wiring specification (Note 1)
⋮	⋮	
09	9 stations	
02	2 stations	Specified layout (Up to 18 solenoids possible.) (Note 2)
⋮	⋮	
18	18 stations	

Series SV2000

Symbol	Stations	Note
02	2 stations	Double wiring specification (Note 1)
⋮	⋮	
12	12 stations	
02	2 stations	Specified layout (Up to 24 solenoids possible.) (Note 2)
⋮	⋮	
20	20 stations	

Note 1) Double wiring specification: Single, double and 3 position solenoid valves can be used on all manifold stations.
Use of a single solenoid will result in an unused control signal. If this is not desired, order with a specified layout.

Note 2) Specified layout: Indicate wiring specifications on a manifold specification sheet.
(Note that double and 3 position valves cannot be used where single solenoid wiring has been specified.)

P, E port position

U	U side (2 to 10 stations)
D	D side (2 to 10 stations)
B	Both sides (2 to 20 stations)

Supply/Exhaust block assembly specification

Nil	Internal pilot specification
S*	Internal pilot/Built-in silencer
R	External pilot specification
RS*	External pilot/Built-in silencer

* When the built-in silencer type is used, keep the exhaust port from coming in direct contact with water or other liquids.

A, B port size (metric)

Symbol	A, B port	P, E port	Applicable series
C3	ø3.2 One-touch fitting	ø8 One-touch fitting	SV1000
C4	ø4 One-touch fitting		
C6	ø6 One-touch fitting		
C4	ø4 One-touch fitting	ø10 One-touch fitting	SV2000
C6	ø6 One-touch fitting		
C8	ø8 One-touch fitting		
C6	ø6 One-touch fitting	ø12 One-touch fitting	SV3000
C8	ø8 One-touch fitting		
C10	ø10 One-touch fitting		
C8	ø8 One-touch fitting	ø12 One-touch fitting	SV4000
C10	ø10 One-touch fitting		
C12	ø12 One-touch fitting		
02	Rc 1/4	Rc 3/8	
03	Rc 3/8		
02F	G 1/4	G 3/8	
03F	G 3/8		
M	A, B ports mixed		

A, B port size (inch)

Symbol	A, B port	P, E port	Applicable series
N1	ø1/8" One-touch fitting	ø5/16" One-touch fitting	SV1000
N3	ø5/32" One-touch fitting		
N7	ø1/4" One-touch fitting		
N3	ø5/32" One-touch fitting	ø3/8" One-touch fitting	SV2000
N7	ø1/4" One-touch fitting		
N9	ø5/16" One-touch fitting		
N7	ø1/4" One-touch fitting	ø3/8" One-touch fitting	SV3000
N9	ø5/16" One-touch fitting		
N11	ø3/8" One-touch fitting		
N9	ø5/16" One-touch fitting	ø3/8" One-touch fitting	SV4000
N11	ø3/8" One-touch fitting		
02N	NPT 1/4	NPT 3/8	
03N	NPT 3/8		
02T	NPTF 1/4	NPTF 3/8	
03T	NPTF 3/8		
M	A, B ports mixed		

* In case of mixed specification (M), indicate separately on a manifold specification sheet.

How to Order Manifold Assemblies (Order Example)

Example (SV1000)

Manifold
SS5V1-W16CD-06B-C6 (1 set)

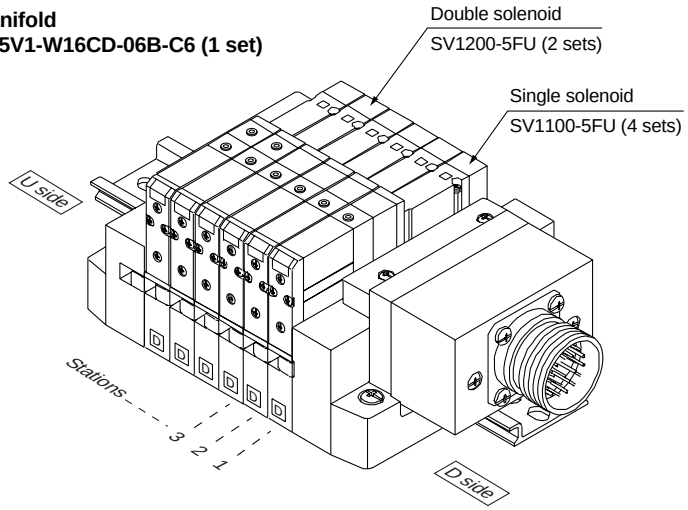

SS5V1-W16CD-06B-C6 ..... 1 set (manifold part no.)
∗ SV1100-5FU ..... 4 sets (single solenoid part no.)
∗ SV1200-5FU ..... 2 sets (double solenoid part no.)

How to Order Solenoid Valves

SV 1 1 0 0 □ □ — 5 F □ □ — □

Note) Available with manifold block for station additions. Refer to pages 77 and 81.

Series

1	SV1000
2	SV2000
3	SV3000
4	SV4000

Type of actuation

1	2 position single solenoid
2	2 position double solenoid
3	3 position closed center
4	3 position exhaust center
5	3 position pressure center
A	4 position dual 3 port valve: N.C./N.C.
B	4 position dual 3 port valve: N.O./N.O.
C	4 position dual 3 port valve: N.C./N.O.

∗ 4 position dual 3 port valves are applicable to series SV1000 and SV2000 only.

Pilot specification

Nil	Internal pilot
R	External pilot

∗ External pilot specification is not available for 4 position dual 3 port valves.

Back pressure check valve

Nil	None
K	Built-in

∗ Built-in back pressure check valve type is applicable to series SV1000 only.
∗ Back pressure check valve is not available for 3 position closed center and 3 position pressure center.
∗ Flow rate with the built-in back pressure check valve is reduced approximately 20%.

Rated voltage

5	24VDC
6	12VDC

Manual override

Nil: Non-locking push type	**D:** Slotted locking type
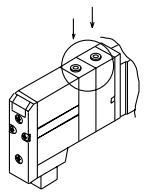	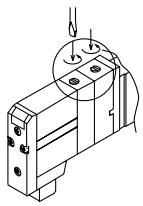

Light/Surge voltage suppressor

U	With light and surge voltage suppressor
R	With surge voltage suppressor

Manifold Electrical Wiring

10C/16C Circular Connector Type (26 pins)

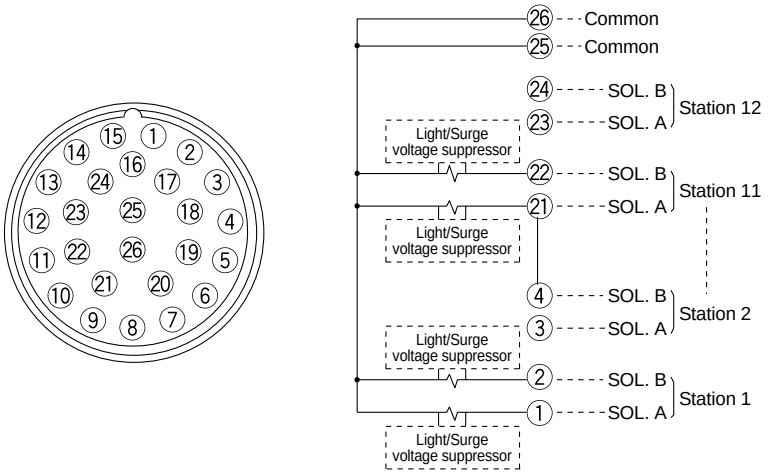

- This circuit has double wiring specifications for up to 12 stations. Since the usable number of solenoids differs depending on the manifold type, refer to the table below. In the case of single solenoids, connect to SOL. A. Furthermore, when wiring is specified on a manifold specification sheet, connections are made without skipping any connectors, and signals A for single and A, B for double are in order 1→2→3→4, etc.
- Stations are counted starting from station 1 on the D side (connector side).
- Since solenoid valves do not have polarity, either the +COM or –COM can be used.

Usable number of solenoids

Model		Maximum number of solenoids
Tie-rod base type 10	SV1000 to SV4000	24
Cassette base type 16	SV1000	18
	SV2000	24

Dimensions: Series SV1000 for Circular Connector

• **Cassette base manifold:** **SS5V1-W16CD - Stations U/D/B (S, R, RS) - C3, N1 / C4, N3 / C6, N7**

• When P, E port outlets are indicated on the U side or D side, the P, E ports on the opposite side are plugged.
• External pilot port positions and silencer discharge port positions are the same as P, E port outlet positions.

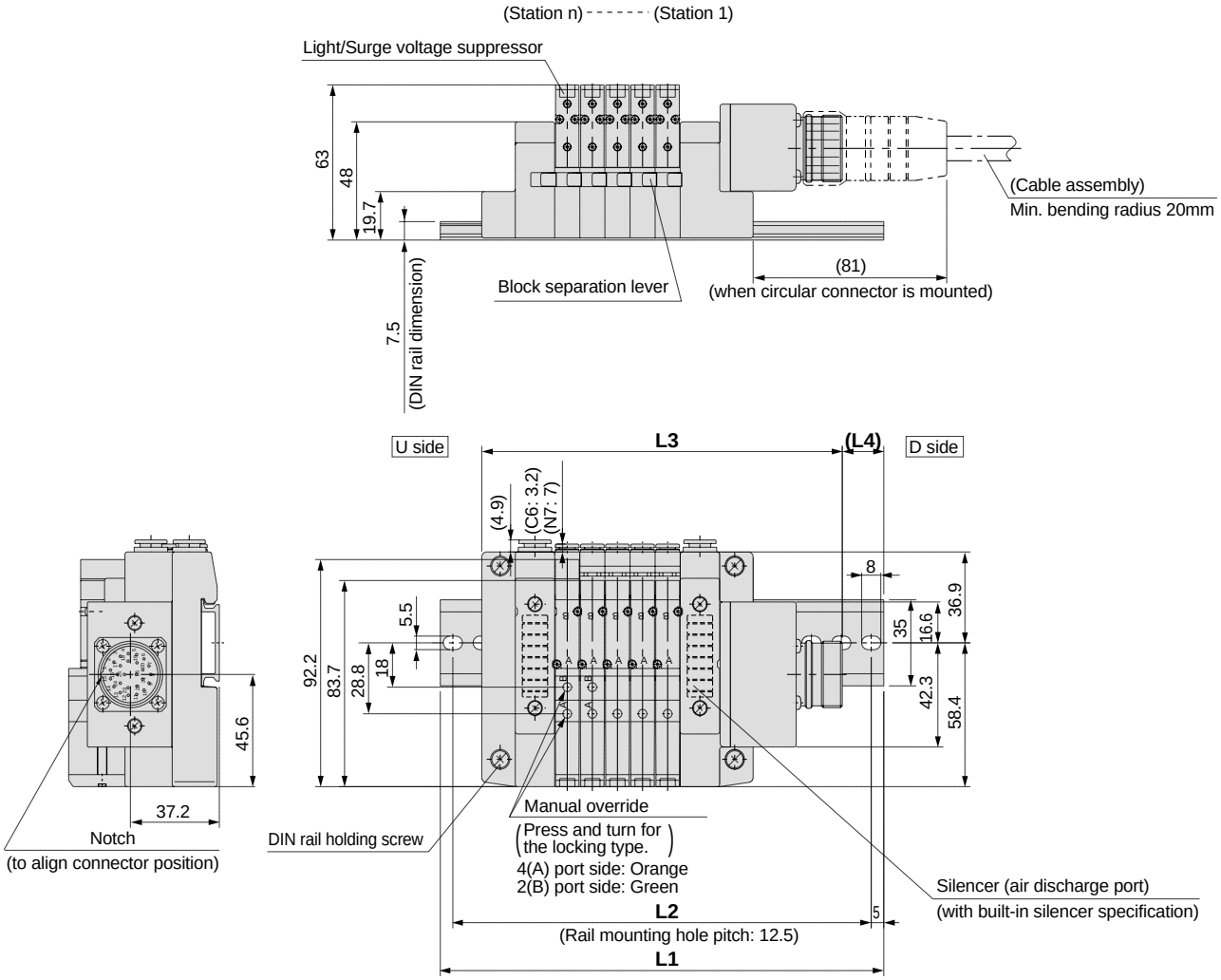

With external pilot specification

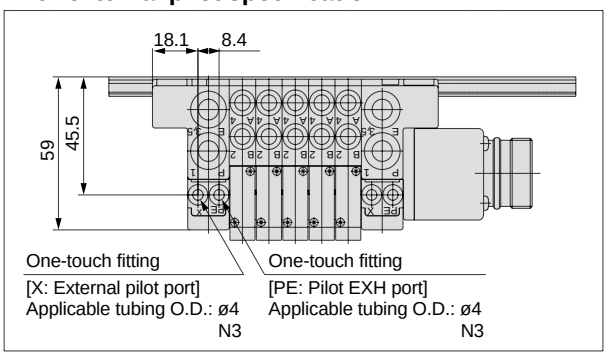

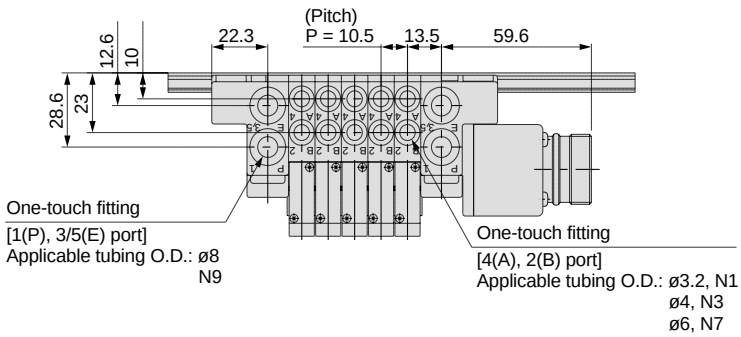

L dimensions

n: Stations

L \ n	2	3	4	5	6	7	8	9	10	11	12	13	14	15	16	17	18
L1	148	160.5	173	185.5	185.5	198	210.5	223	235.5	248	248	260.5	273	285.5	298	310.5	310.5
L2	137.5	150	162.5	175	175	187.5	200	212.5	225	237.5	237.5	250	262.5	275	287.5	300	300
L3	119.3	129.8	140.3	150.8	161.3	171.8	182.3	192.8	203.3	213.8	224.3	234.8	245.3	255.8	266.3	276.8	287.3
L4	14.5	15.5	16.5	17.5	12	13	14	15	16	17	12	13	14	15	16	17	11.5

Dimensions: Series SV2000 for Circular Connector

• **Cassette base manifold: SS5V2-W16CD-** Stations U/D/B **(S, R, RS) -** C4, N3 / C6, N7 / C8, N9

• When P, E port outlets are indicated on the U side or D side, the P, E ports on the opposite side are plugged.
• External pilot port positions and silencer discharge port positions are the same as P, E port outlet positions.

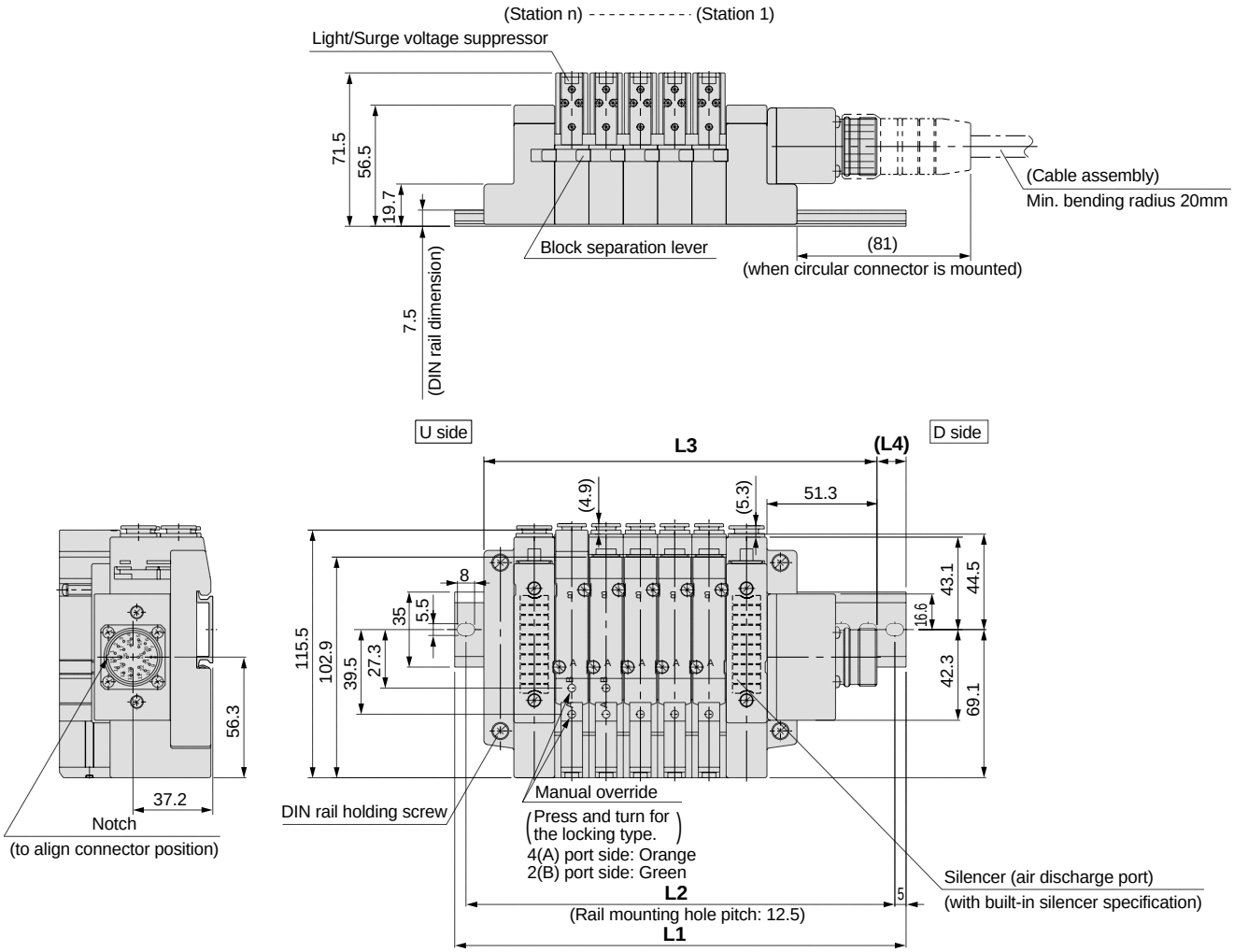

With external pilot specification

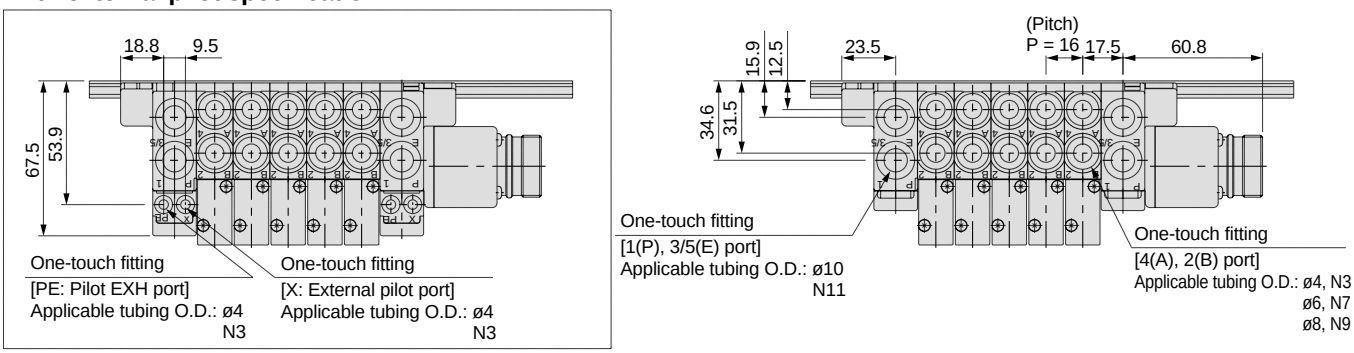

L dimensions

n: Stations

L \ n	2	3	4	5	6	7	8	9	10	11	12	13	14	15	16	17	18	19	20
L1	160.5	185.5	198	210.5	223	248	260.5	273	298	310.5	323	335.5	360.5	373	385.5	410.5	423	435.5	448
L2	150	175	187.5	200	212.5	237.5	250	262.5	287.5	300	312.5	325	350	362.5	375	400	412.5	425	437.5
L3	135.3	151.3	167.3	183.3	199.3	215.3	231.3	247.3	263.3	279.3	295.3	311.3	327.3	343.3	359.3	375.3	391.3	407.3	423.3
L4	12.5	17	15.5	13.5	12	16.5	14.5	13	17.5	15.5	14	12	16.5	15	13	17.5	16	14	12.5

Dimensions: Series SV1000 for Circular Connector

• **Tie-rod base manifold: SS5V1-W10CD - Stations U/D/B (S, R, RS) - C3, N1 / C4, N3 / C6, N7 (-D)**

- When P, E port outlets are indicated on the U side or D side, the P, E ports on the opposite side are plugged.
- External pilot port positions and silencer discharge port positions are the same as P, E port outlet positions.

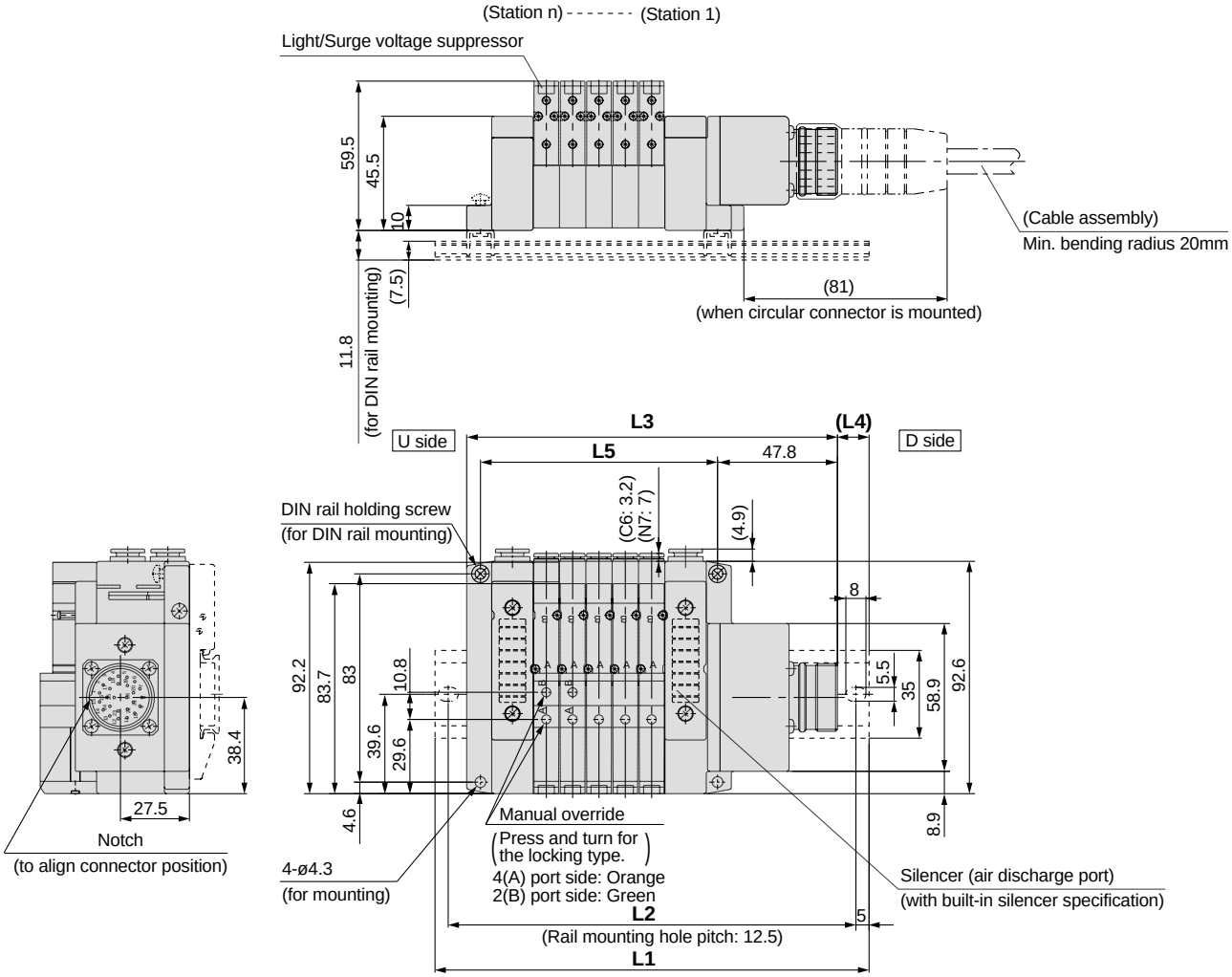

With external pilot specification

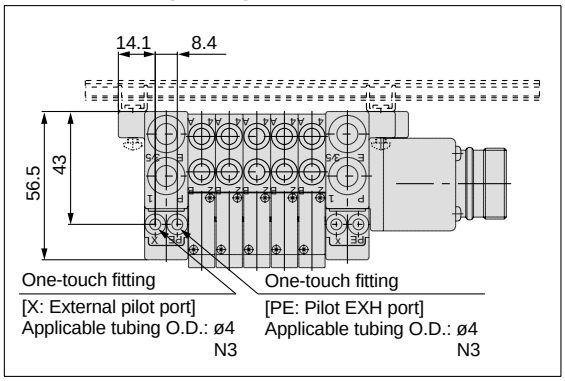

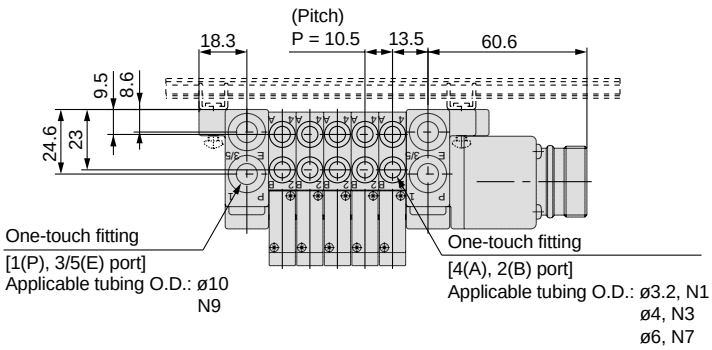

L dimensions

n: Stations

L \ n	2	3	4	5	6	7	8	9	10	11	12	13	14	15	16	17	18	19	20
L1	148	160.5	160.5	173	185.5	198	210.5	223	235.5	235.5	248	260.5	273	285.5	298	298	310.5	323	335.5
L2	137.5	150	150	162.5	175	187.5	200	212.5	225	225	237.5	250	262.5	275	287.5	287.5	300	312.5	325
L3	116.3	126.8	137.3	147.8	158.3	168.8	179.3	189.8	200.3	210.8	221.3	231.8	242.3	252.8	263.3	273.8	284.3	294.8	305.3
L4	16	17	11.5	12.5	13.5	14.5	15.5	16.5	17.5	12.5	13.5	14.5	15.5	16.5	17.5	12	13	14	15
L5	63	73.5	84	94.5	105	115.5	126	136.5	147	157.5	168	178.5	189	199.5	210	220.5	231	241.5	252

Dimensions: Series SV2000 for Circular Connector

• **Tie-rod base manifold: SS5V2-W10CD - Stations U/D/B (S, R, RS) - C4, N3 / C6, N7 / C8, N9 (-D)**

• When P, E port outlets are indicated on the U side or D side, the P, E ports on the opposite side are plugged.
• External pilot port positions and silencer discharge port positions are the same as P, E port outlet positions.

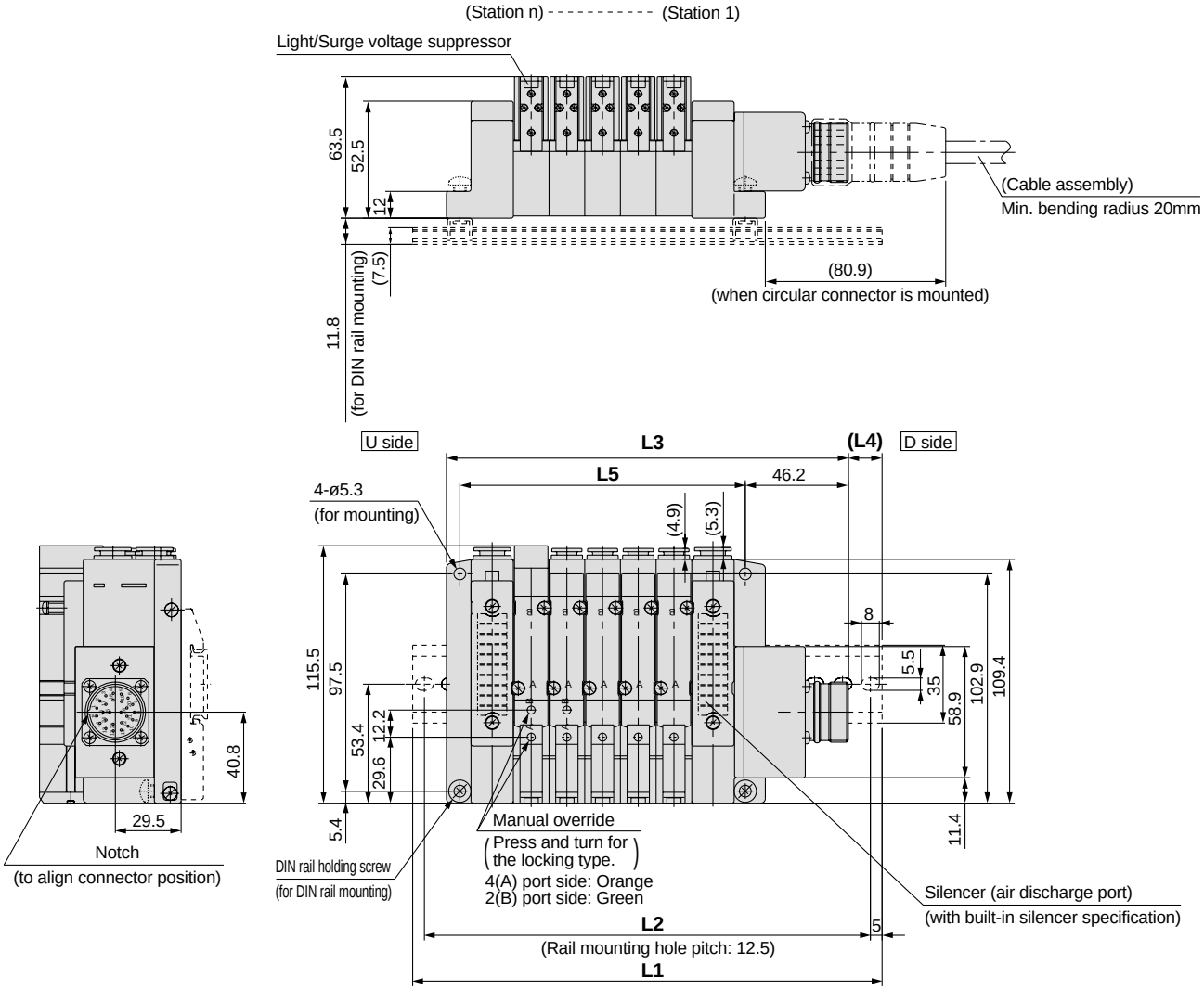

With external pilot specification

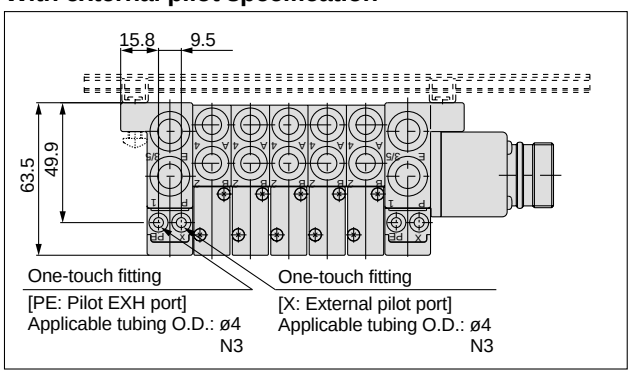

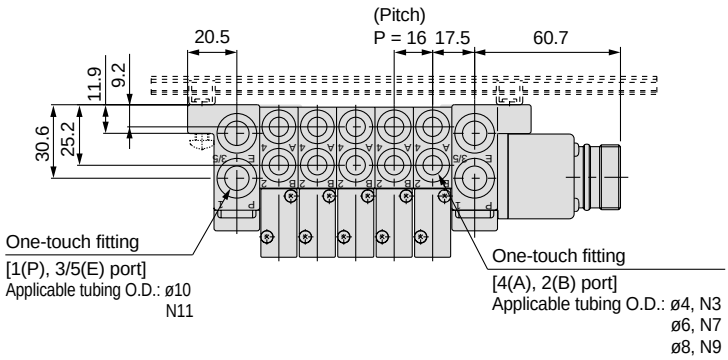

L dimensions

n: Stations

L \ n	2	3	4	5	6	7	8	9	10	11	12	13	14	15	16	17	18	19	20
L1	160.5	173	198	210.5	223	235.5	260.5	273	285.5	310.5	323	335.5	348	373	385.5	398	423	435.5	448
L2	150	162.5	187.5	200	212.5	225	250	262.5	275	300	312.5	325	337.5	362.5	375	387.5	412.5	425	437.5
L3	132.2	148.2	164.2	180.2	196.2	212.2	228.2	244.2	260.2	276.2	292.2	308.2	324.2	340.2	356.2	372.2	388.2	404.2	420.2
L4	14	12.5	17	15	13.5	11.5	16	14.5	12.5	17	15.5	13.5	12	16.5	14.5	13	17.5	15.5	14
L5	80	96	112	128	144	160	176	192	208	224	240	256	272	288	304	320	336	352	368

Dimensions: Series SV3000 for Circular Connector

• **Tie-rod base manifold: SS5V3-W10CD - Stations U/D/B (S, R, RS) - C6, N7 / C8, N9 / C10, N11 (-D)**

• When P, E port outlets are indicated on the U side or D side, the P, E ports on the opposite side are plugged.
• External pilot port positions and silencer discharge port positions are the same as P, E port outlet positions.

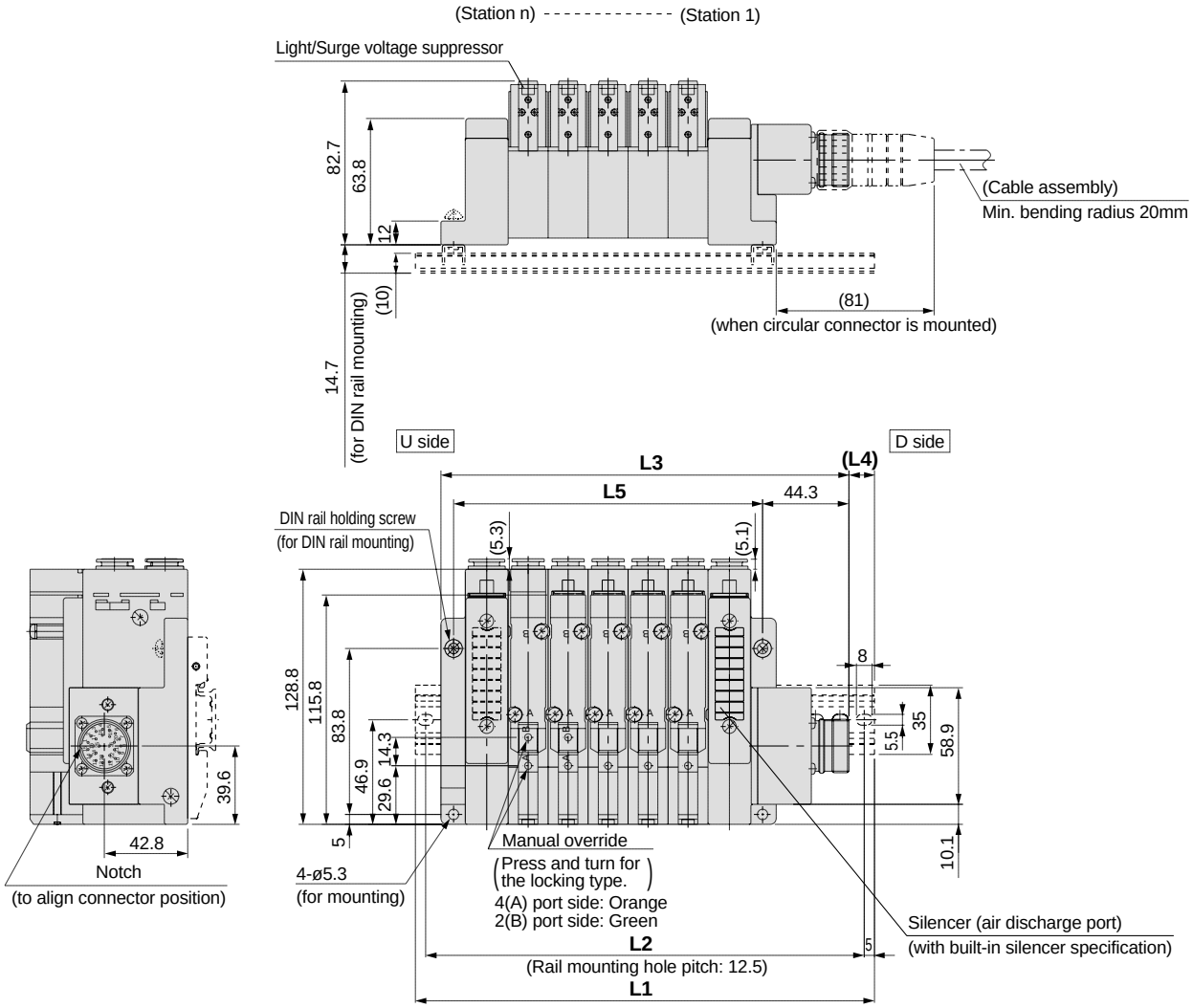

With external pilot specification

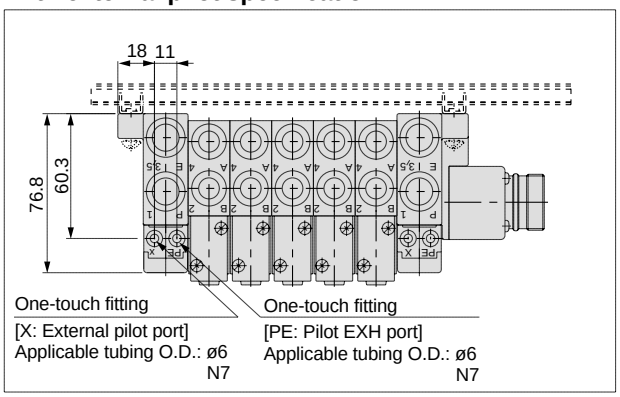

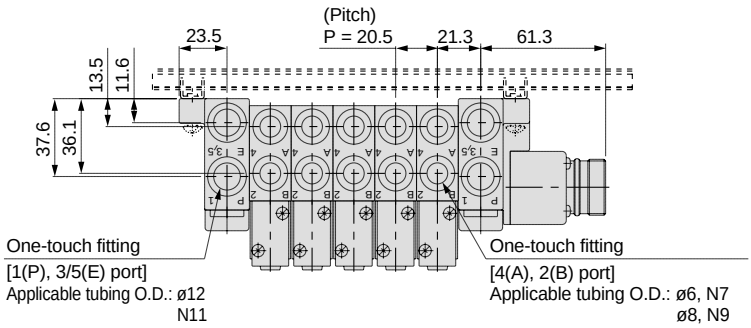

L dimensions

n : Stations

L \ n	2	3	4	5	6	7	8	9	10	11	12	13	14	15	16	17	18	19	20
L1	173	198	223	235.5	260.5	285.5	298	323	335.5	360.5	385.5	398	423	448	460.5	485.5	510.5	523	548
L2	162.5	187.5	212.5	225	250	275	287.5	312.5	325	350	375	387.5	412.5	437.5	450	475	500	512.5	537.5
L3	147.8	168.3	188.8	209.3	229.8	250.3	270.8	291.3	311.8	332.3	352.8	373.3	393.8	414.3	434.8	455.3	475.8	496.3	516.8
L4	12.5	15	17	13	15.5	17.5	13.5	16	12	14	16.5	12.5	14.5	17	13	15	17.5	13.5	15.5
L5	97	117.5	138	158.5	179	199.5	220	240.5	261	281.5	302	322.5	343	363.5	384	404.5	425	445.5	466

Dimensions: Series SV4000 for Circular Connector

• **Tie-rod base manifold: SS5V4-W10CD - Stations U/D/B (S, R, RS) - 02, 03, C8, C10, C12, N9, N11, (-D)**

• When P, E port outlets are indicated on the U side or D side, the P, E ports on the opposite side are plugged.
• External pilot port positions and silencer discharge port positions are the same as P, E port outlet positions.

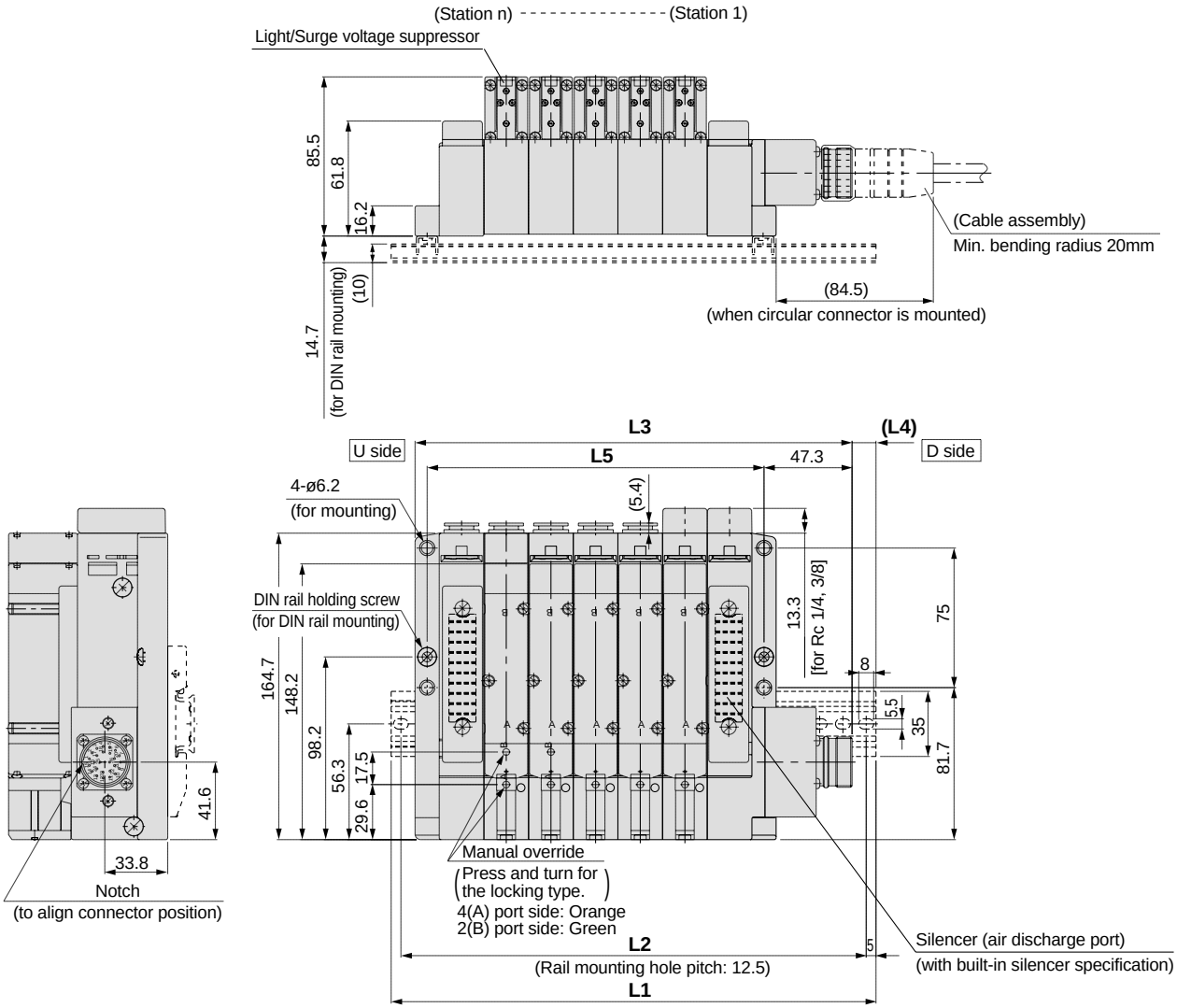

With external pilot specification

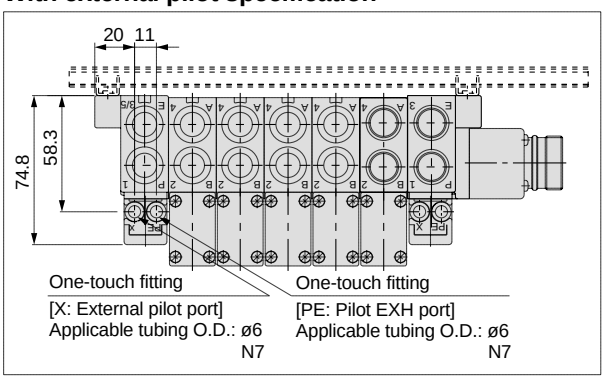

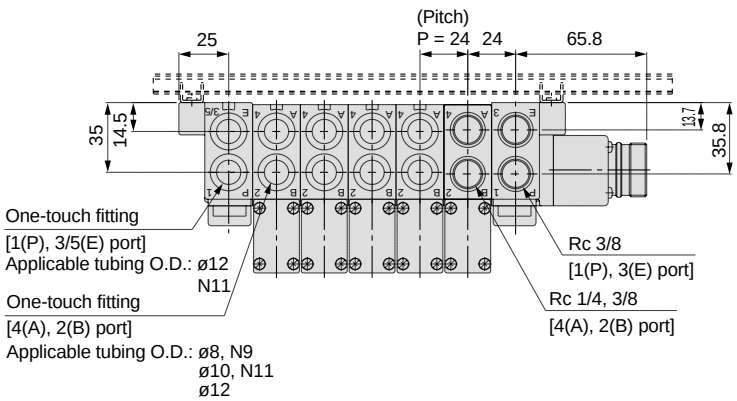

L dimensions

n: Stations

L \ n	2	3	4	5	6	7	8	9	10	11	12	13	14	15	16	17	18	19	20
L1	198	210.5	235.5	260.5	285.5	310.5	335.5	360.5	385.5	410.5	435.5	460.5	485.5	498	523	548	573	598	623
L2	187.5	200	225	250	275	300	325	350	375	400	425	450	475	487.5	512.5	537.5	562.5	587.5	612.5
L3	162.8	186.8	210.8	234.8	258.8	282.8	306.8	330.8	354.8	378.8	402.8	426.8	450.8	474.8	498.8	522.8	546.8	570.8	594.8
L4	17.5	12	12.5	13	13.5	14	14.5	15	15.5	16	16.5	17	17.5	11.5	12	12.5	13	13.5	14
L5	109	133	157	181	205	229	253	277	301	325	349	373	397	421	445	469	493	517	541

D-sub Connector

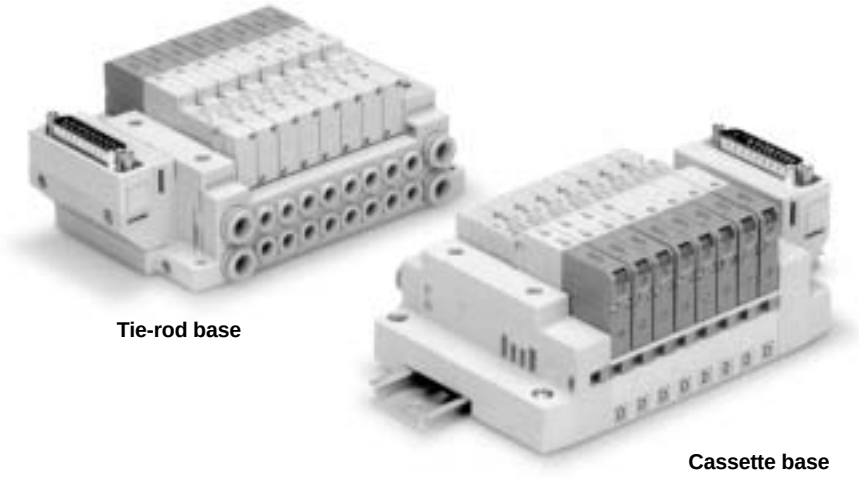

Applicable series	Cassette base manifold SV1000/SV2000
	Tie-rod base manifold SV1000/SV2000/SV3000/SV4000
	• Number of connectors: 25 pins • MIL-C-24308 Conforms to JIS-X-5101

D-sub Connector
Series SV

How to Order

• **Tie-rod base**

SS5V 1 — 10FD 1 — 05 U □ — □ — □

• **Cassette base**

SS5V 1 — 16FD 1 — 05 U □ — □ — □

Series

1	SV1000
2	SV2000
3	SV3000
4	SV4000

Valve stations

Symbol	Stations	Note
02	2 stations	Note 1) Double wiring specification
⋮	⋮	
11	11 stations	
02	2 stations	Note 2) Specified layout (Up to 23 solenoids possible.)
⋮	⋮	
20	20 stations	

Note 1) Double wiring specification: Single, double and 3 position solenoid valves can be used on all manifold stations. Use of a single solenoid will result in an unused control signal. If this is not desired, order with a specified layout.

Note 2) Specified layout: Indicate wiring specifications on a manifold specification sheet. (Note that double and 3 position valves cannot be used where single solenoid wiring has been specified.)

Mounting

Nil	Direct mount	
D	DIN rail mount (with DIN rail)	
Note) D0	DIN rail mount (without DIN rail)	
D3	For 3 stations	When a DIN rail longer than the specified stations is required. (Specify a rail longer than the standard length.)
⋮	⋮	
D20	For 20 stations	

Note) In case of D0, only DIN rail fittings are attached.

Series

1	SV1000
2	SV2000

Connector entry direction

1	Upward
2	Lateral

Valve stations

Series SV1000

Symbol	Stations	Note
02	2 stations	Note 1) Double wiring specification
⋮	⋮	
09	9 stations	
02	2 stations	Note 2) Specified layout (Up to 18 solenoids possible.)
⋮	⋮	
18	18 stations	

Series SV2000

Symbol	Stations	Note
02	2 stations	Note 1) Double wiring specification
⋮	⋮	
11	11 stations	
02	2 stations	Note 2) Specified layout (Up to 23 solenoids possible.)
⋮	⋮	
20	20 stations	

Note 1) Double wiring specification: Single, double and 3 position solenoid valves can be used on all manifold stations. Use of a single solenoid will result in an unused control signal. If this is not desired, order with a specified layout.

Note 2) Specified layout: Indicate wiring specifications on a manifold specification sheet. (Note that double and 3 position valves cannot be used where single solenoid wiring has been specified.)

P, E port position

U	U side (2 to 10 stations)
D	D side (2 to 10 stations)
B	Both sides (2 to 20 stations)

DIN rail length

Nil	Standard length	
3	For 3 stations	Specify a rail longer than the standard length.
⋮	⋮	
20	For 20 stations	

Pilot specification

Nil	Internal pilot specification
S	Internal pilot/Built-in silencer
R	External pilot specification
RS	External pilot/Built-in silencer

A, B port size (metric)

Symbol	A, B port	P, E port	Applicable series
C3	ø3.2 One-touch fitting	ø8 One-touch fitting	SV1000
C4	ø4 One-touch fitting		
C6	ø6 One-touch fitting		
C4	ø4 One-touch fitting	ø10 One-touch fitting	SV2000
C6	ø6 One-touch fitting		
C8	ø8 One-touch fitting		
C6	ø6 One-touch fitting	ø12 One-touch fitting	SV3000
C8	ø8 One-touch fitting		
C10	ø10 One-touch fitting		
C8	ø8 One-touch fitting	ø12 One-touch fitting	SV4000
C10	ø10 One-touch fitting		
C12	ø12 One-touch fitting		
02	Rc 1/4	Rc 3/8	
03	Rc 3/8		
02F	G 1/4	G 3/8	
03F	G 3/8		
M	A, B ports mixed		

A, B port size (inch)

Symbol	A, B port	P, E port	Applicable series
N1	ø1/8" One-touch fitting	ø5/16" One-touch fitting	SV1000
N3	ø5/32" One-touch fitting		
N7	ø1/4" One-touch fitting		
N3	ø5/32" One-touch fitting	ø3/8" One-touch fitting	SV2000
N7	ø1/4" One-touch fitting		
N9	ø5/16" One-touch fitting		
N7	ø1/4" One-touch fitting	ø3/8" One-touch fitting	SV3000
N9	ø5/16" One-touch fitting		
N11	ø3/8" One-touch fitting		
N9	ø5/16" One-touch fitting	ø3/8" One-touch fitting	SV4000
N11	ø3/8" One-touch fitting		
02N	NPT 1/4	NPT 3/8	
03N	NPT 3/8		
02T	NPTF 1/4	NPTF 3/8	
03T	NPTF 3/8		
M	A, B ports mixed		

∗ In case of mixed specification (M), indicate separately on a manifold specification sheet.

How to Order Manifold Assemblies (Order Example)

Example (SV1000)

Manifold
SS5V1-10FD1-06B-C6 (1 set)

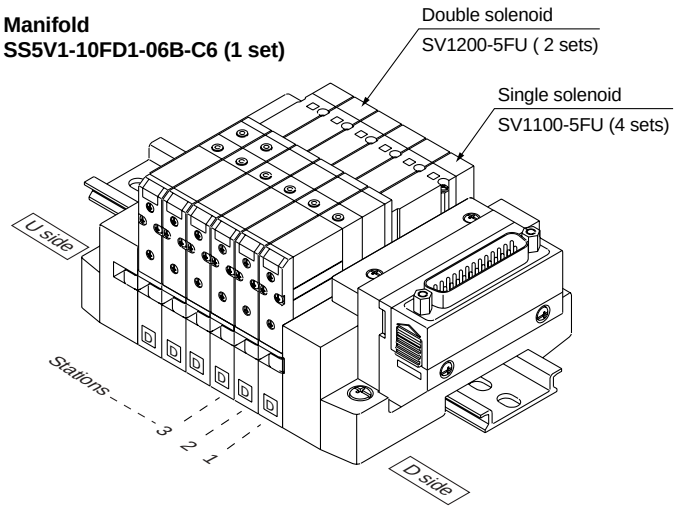

SS5V1-10FD1-06B-C6 ..... 1 set (manifold part no.)
∗ SV1100-5FU ..... 4 sets (single solenoid part no.)
∗ SV1200-5FU ..... 2 sets (double solenoid part no.)

How to Order Solenoid Valves

SV 1 1 0 0 □ □ — 5 F □ □ — □

Note) Available with manifold block for station additions. Refer to pages 77 and 81.

Series

1	SV1000
2	SV2000
3	SV3000
4	SV4000

Type of actuation

1	2 position single solenoid
2	2 position double solenoid
3	3 position closed center
4	3 position exhaust center
5	3 position pressure center
A	4 position dual 3 port valve: N.C./N.C.
B	4 position dual 3 port valve: N.O./N.O.
C	4 position dual 3 port valve: N.C./N.O.

∗ 4 position dual 3 port valves are applicable to series SV1000 and SV2000 only.

Pilot specification

Nil	Internal pilot
R	External pilot

∗ External pilot specification is not available for 4 position dual 3 port valves.

Back pressure check valve

Nil	None
K	Built-in

∗ Built-in back pressure check valve type is applicable to series SV1000 only.
∗ Back pressure check valve is not available for 3 position closed center and 3 position pressure center.
∗ Flow rate with the built-in back pressure check valve is reduced approximately 20%.

Rated voltage

5	24VDC
6	12VDC

Light/Surge voltage suppressor

U	With light and surge voltage suppressor
R	With surge voltage suppressor

Manual override

Nil: Non-locking push type	**D:** Slotted locking type
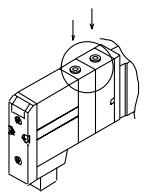	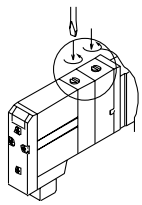

Manifold Electrical Wiring

10F/16F D-sub Connector Type (25 pins)

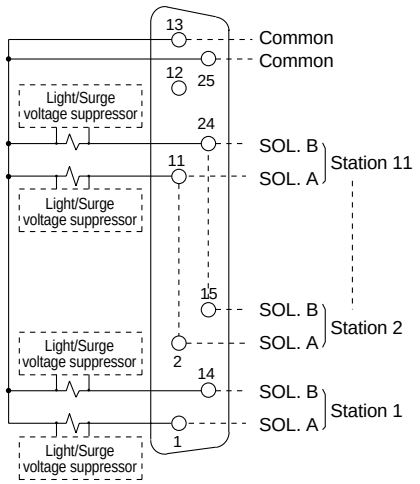

- This circuit has double wiring specifications for up to 11 stations. Since the usable number of solenoids differs depending on the manifold type, refer to the table below. In the case of single solenoids, connect to SOL. A. Furthermore, when wiring is specified on a manifold specification sheet, connections are made without skipping any connectors, and signals A for single and A, B for double are in order 1→14→2→15, etc.
- Stations are counted starting from station 1 on the D side (connector side).
- Since solenoid valves do not have polarity, either the +COM or –COM can be used.

Usable number of solenoids

Model		Maximum number of solenoids
Tie-rod base type 10	SV1000 to SV4000	23
Cassette base type 16	SV1000	18
	SV2000	23

Dimensions: Series SV1000 for D-sub Connector

• **Cassette base manifold:** **SS5V1-16FD** $^{1}_{2}$ **-** Stations $^{U}_{D}$ $^{}_{B}$ **(S, R, RS) -** C3, N1 / C4, N3 / C6, N7

• When P, E port outlets are indicated on the U side or D side, the P, E ports on the opposite side are plugged.
• External pilot port positions and silencer discharge port positions are the same as P, E port outlet positions.

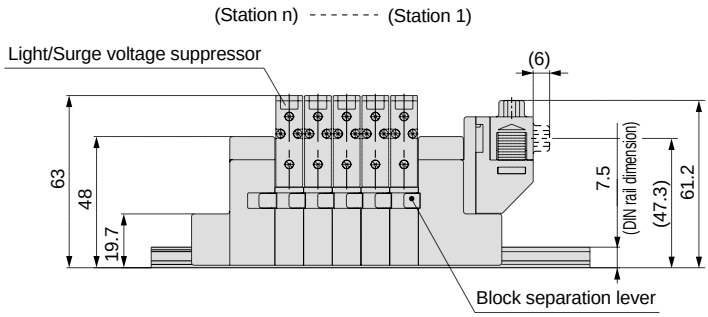

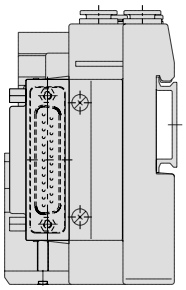

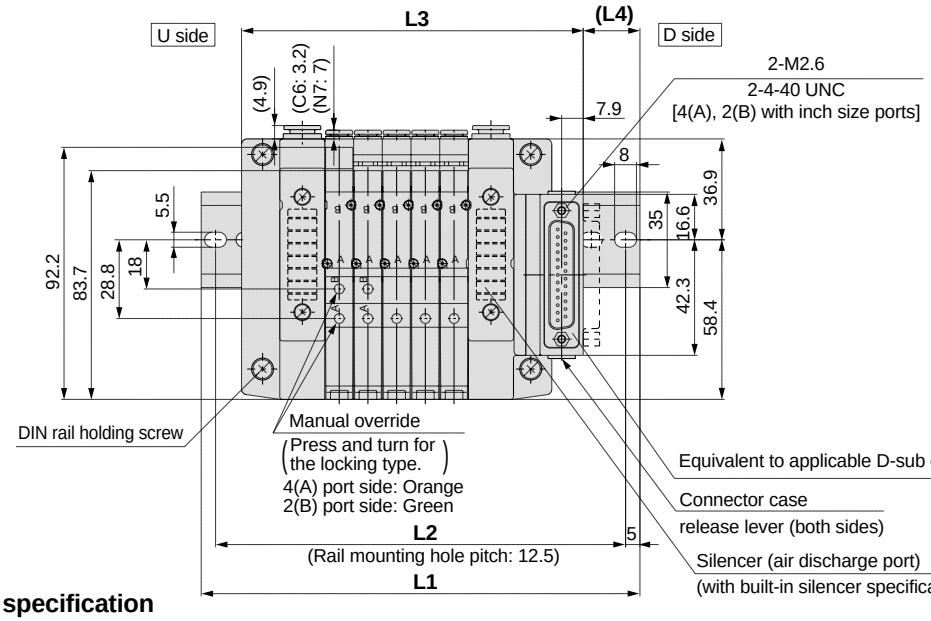

With external pilot specification

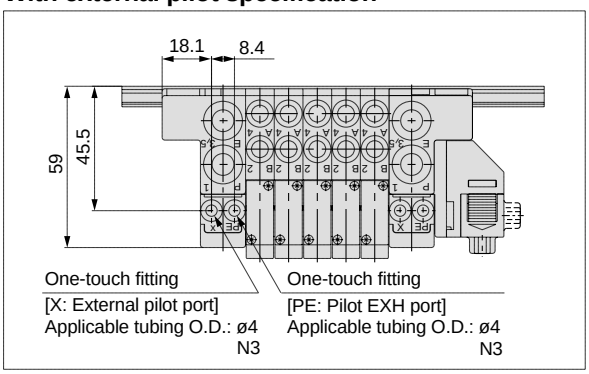

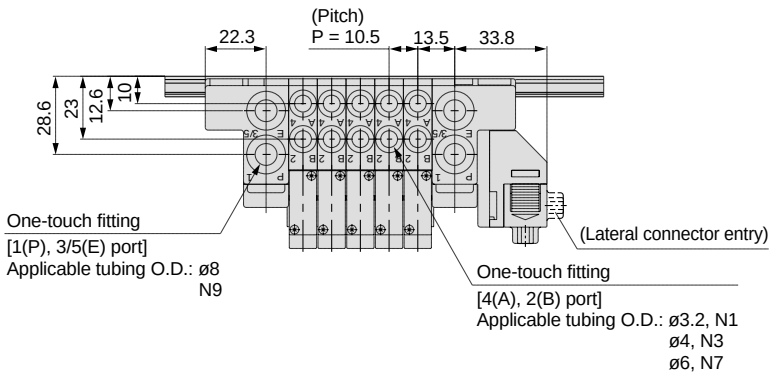

L dimensions

n: Stations

L \ n	2	3	4	5	6	7	8	9	10	11	12	13	14	15	16	17	18
L1	123	135.5	148	160.5	173	185.5	198	198	210.5	223	235.5	248	260.5	260.5	273	285.5	298
L2	112.5	125	137.5	150	162.5	175	187.5	187.5	200	212.5	225	237.5	250	250	262.5	275	287.5
L3	99.5	110	120.5	131	141.5	152	162.5	173	183.5	194	204.5	215	225.5	236	246.5	257	267.5
L4	12	13	14	15	16	17	18	12.5	13.5	14.5	15.5	16.5	17.5	12.5	13.5	14.5	15.5

Dimensions: Series SV2000 for D-sub Connector

• **Cassette base manifold:** **SS5V2-16FD** $^{1}_{2}$ **-** Stations $^{U}_{D}$ ^{B} **(S, R, RS) -** C4, N3 / C6, N7 / C8, N9

• When P, E port outlets are indicated on the U side or D side, the P, E ports on the opposite side are plugged.
• External pilot port positions and silencer discharge port positions are the same as P, E port outlet positions.

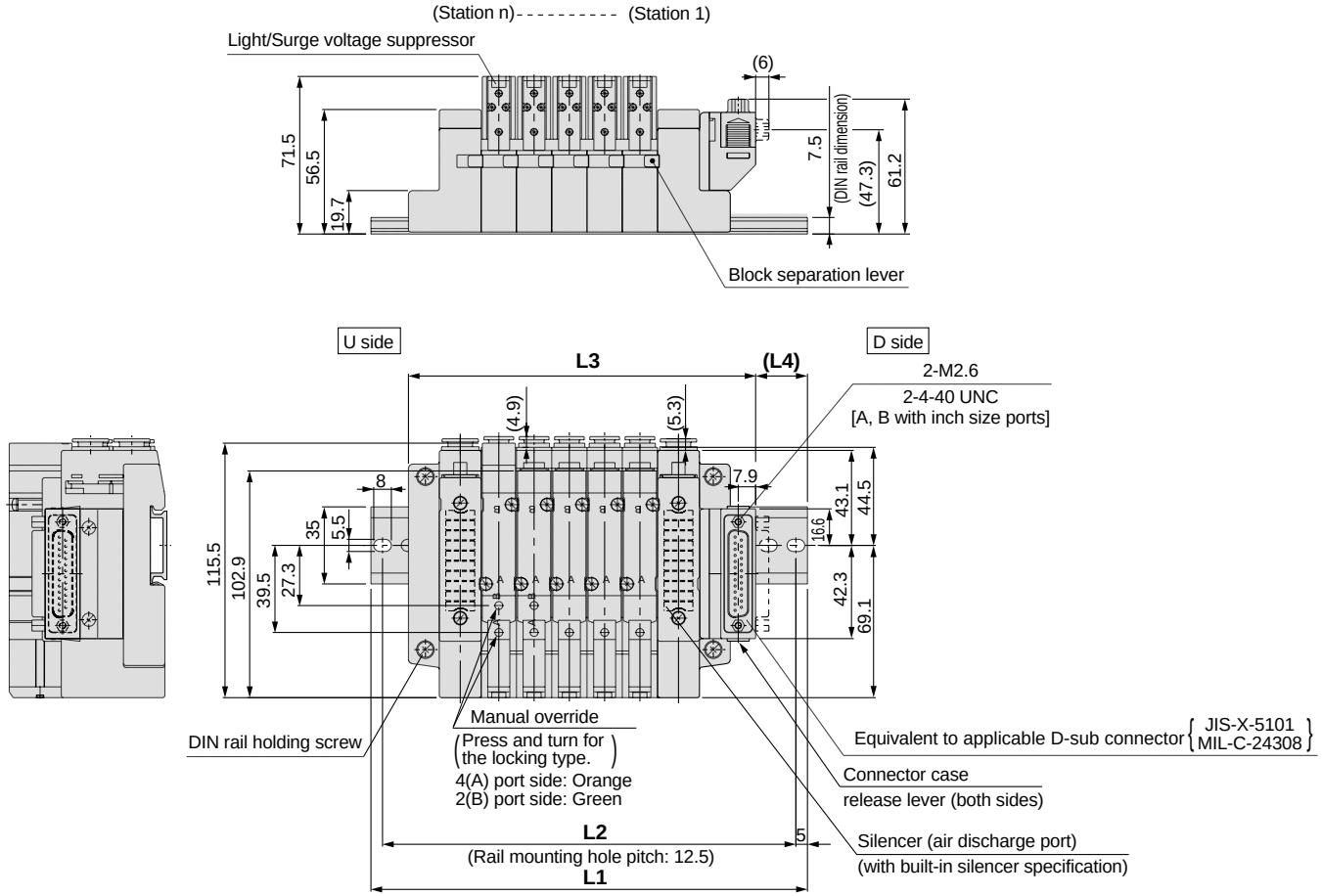

With external pilot specification

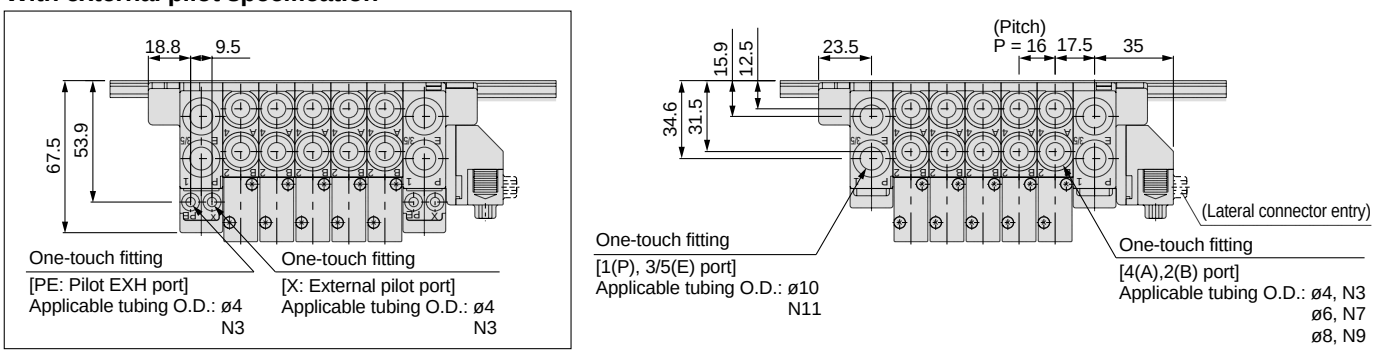

L dimensions

n: Stations

L \ n	2	3	4	5	6	7	8	9	10	11	12	13	14	15	16	17	18	19	20
L1	148	160.5	173	198	210.5	223	235.5	260.5	273	285.5	310.5	323	335.5	348	373	385.5	398	423	435.5
L2	137.5	150	162.5	187.5	200	212.5	225	250	262.5	275	300	312.5	325	337.5	362.5	375	387.5	412.5	425
L3	109.5	125.5	141.5	157.5	173.5	189.5	205.5	221.5	237.5	253.5	269.5	285.5	301.5	317.5	333.5	349.5	365.5	381.5	397.5
L4	22.5	20.5	19	23.5	21.5	20	18	22.5	21	19	23.5	22	20	18.5	23	21	19.5	24	22

Dimensions: Series SV1000 for D-sub Connector

• **Tie-rod base manifold: SS5V1-10FD $\frac{1}{2}$- Stations U/D/B (S, R, RS) - C3, N1 / C4, N3 / C6, N7 (-D)**

• When P, E port outlets are indicated on the U side or D side, the P, E ports on the opposite side are plugged.
• External pilot port positions and silencer discharge port positions are the same as P, E port outlet positions.

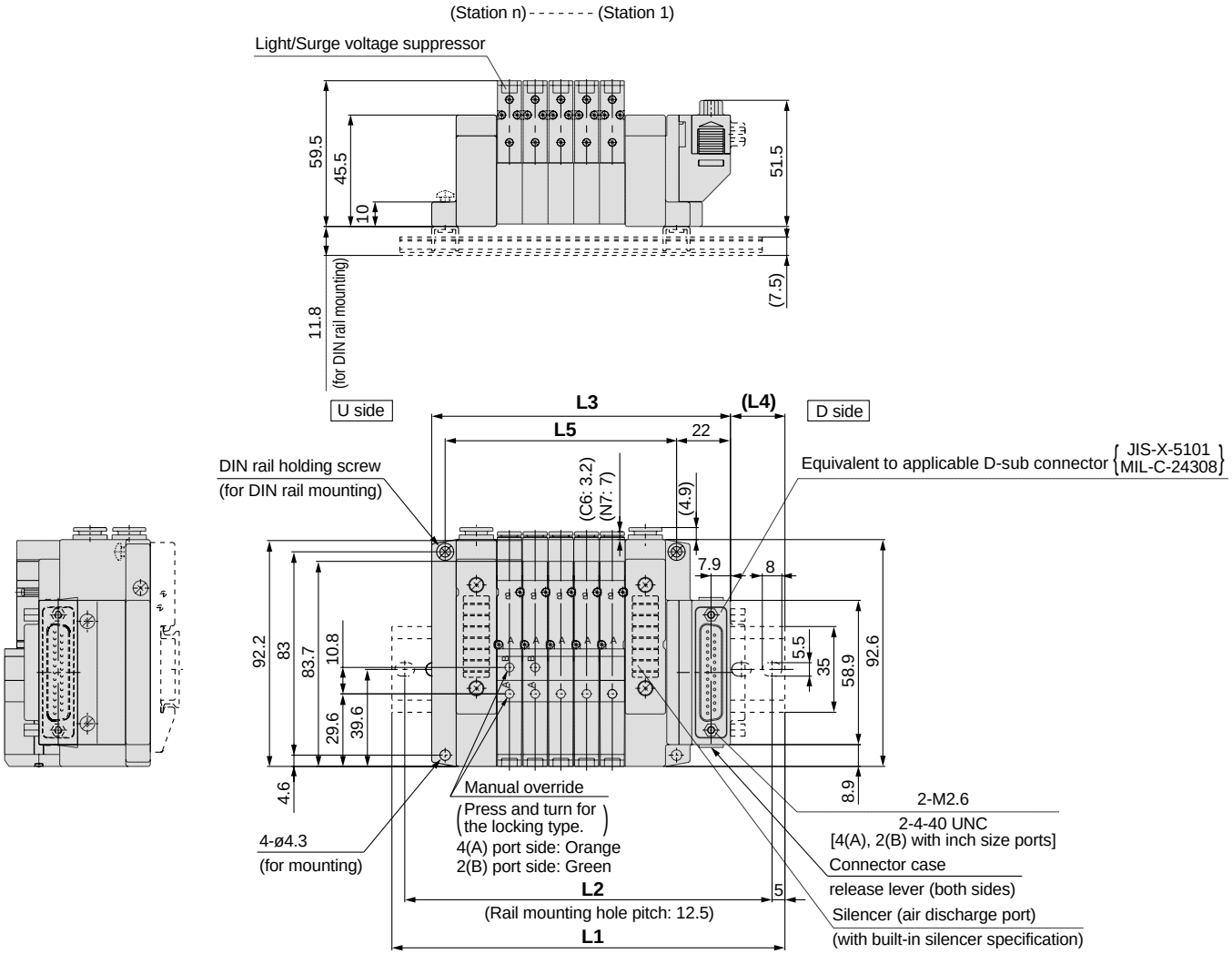

With external pilot specification

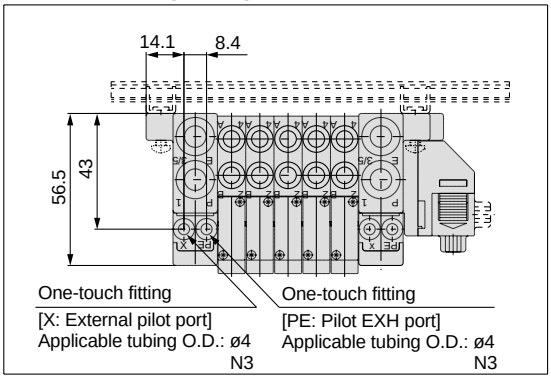

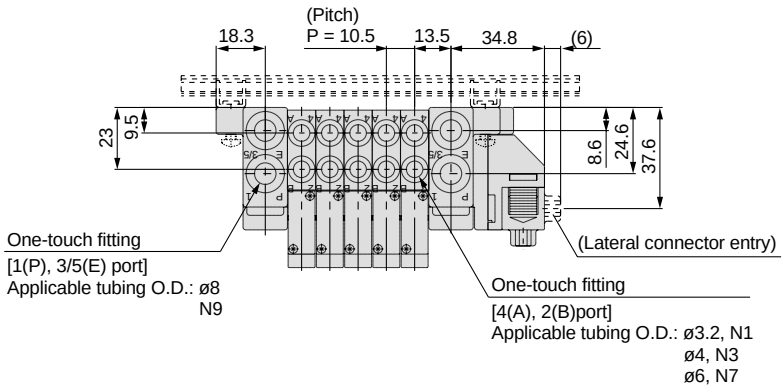

L dimensions

n: Stations

L \ n	2	3	4	5	6	7	8	9	10	11	12	13	14	15	16	17	18	19	20
L1	123	135.5	148	160.5	173	173	185.5	198	210.5	223	235.5	235.5	248	260.5	273	285.5	298	310.5	310.5
L2	112.5	125	137.5	150	162.5	162.5	175	187.5	200	212.5	225	225	237.5	250	262.5	275	287.5	300	300
L3	90.5	101	111.5	122	132.5	143	153.5	164	174.5	185	195.5	206	216.5	227	237.5	248	258.5	269	279.5
L4	19.5	20.5	21.5	22.5	23.5	18	19	20	21	22	23	18	19	20	21	22	23	24	18.5
L5	63	73.5	84	94.5	105	115.5	126	136.5	147	157.5	168	178.9	189	199.5	210	220.5	231	241.5	252

Dimensions: Series SV2000 for D-sub Connector

- **Tie-rod base manifold: SS5V2-10FD $^{1}_{2}$- Stations $^{U}_{D}$ ^{B} (S, R, RS) - $^{C4, N3}_{C6, N7}$ $^{C8, N9}$ (-D)**

  - When P, E port outlets are indicated on the U side or D side, the P, E ports on the opposite side are plugged.
  - External pilot port positions and silencer discharge port positions are the same as P, E port outlet positions.

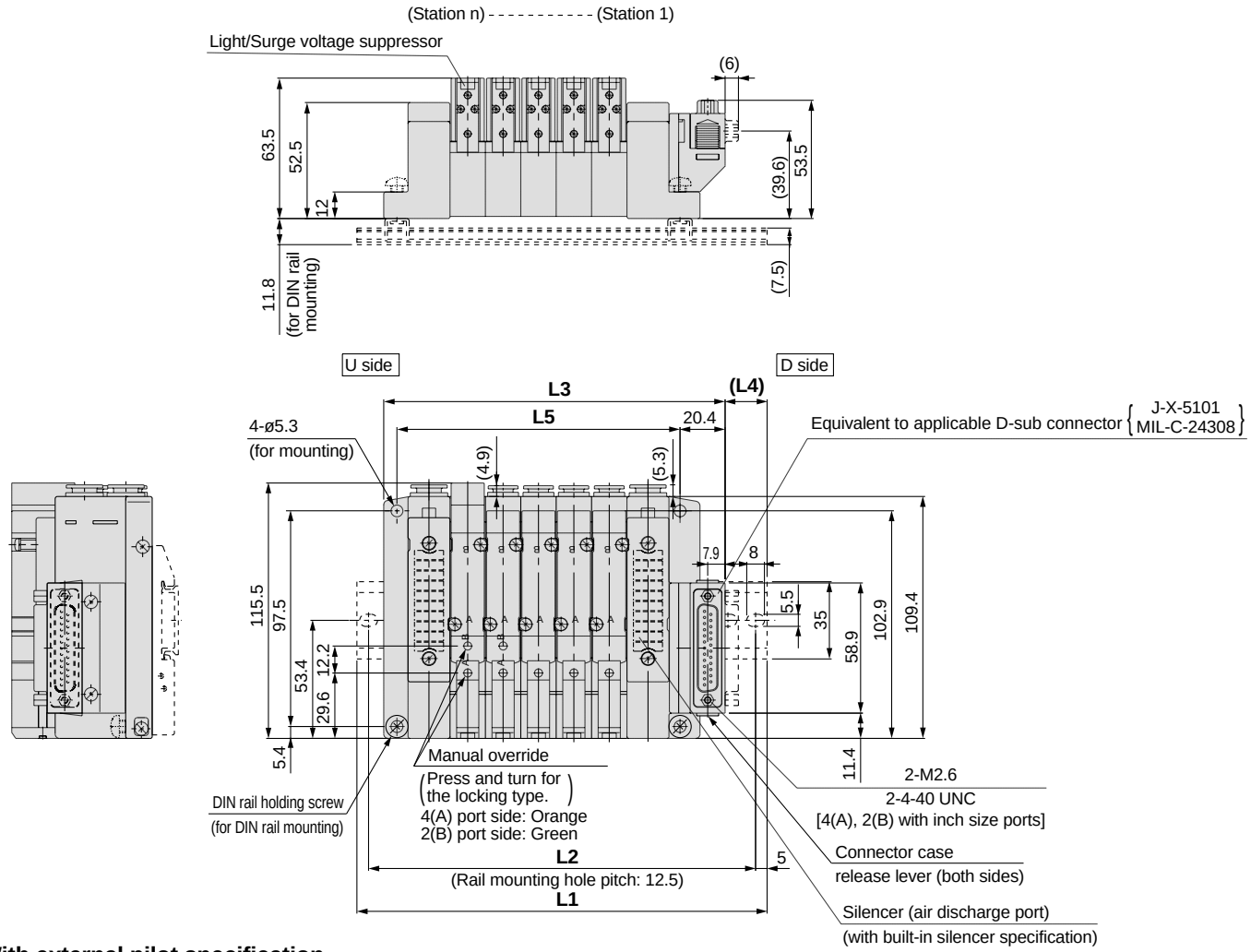

With external pilot specification

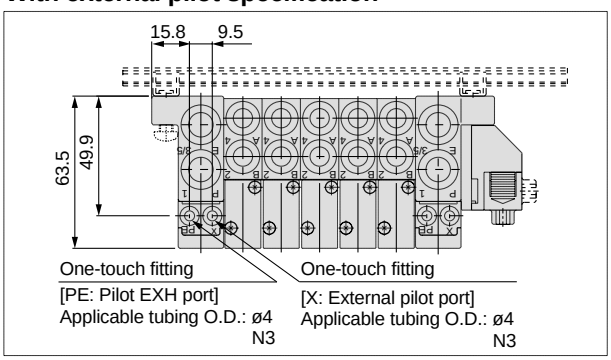

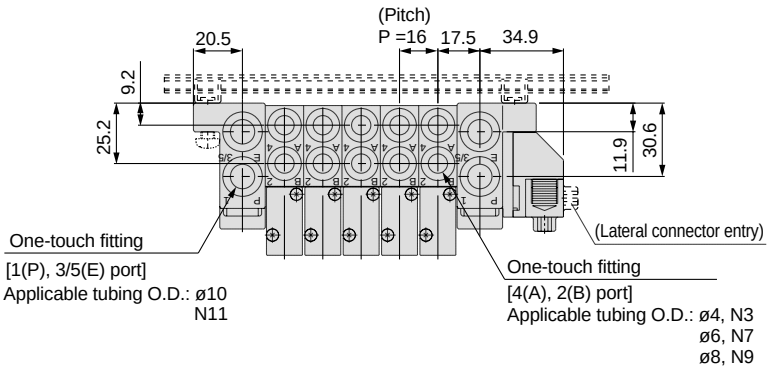

L dimensions

n: Stations

L \ n	2	3	4	5	6	7	8	9	10	11	12	13	14	15	16	17	18	19	20
L1	135.5	160.5	173	185.5	210.5	223	235.5	248	273	285.5	298	323	335.5	348	360.5	385.5	398	410.5	435.5
L2	125	150	162.5	175	200	212.5	225	237.5	262.5	275	287.5	312.5	325	337.5	350	375	387.5	400	425
L3	106.4	122.4	138.4	154.4	170.4	186.4	202.4	218.4	234.4	250.4	266.4	282.4	298.4	314.4	330.4	346.4	362.4	378.4	394.4
L4	18	22	20.5	19	23	21.5	20	18	22.5	21	19	23.5	22	20	18	22.5	21	19	23.5
L5	80	96	112	128	144	160	176	192	208	224	240	256	272	288	304	320	336	352	368

Dimensions/Series SV3000 for D-sub Connector

• **Tie-rod base manifold: SS5V3-10FD $\frac{1}{2}$ - Stations $^{U}_{D}$ ^{B} (S, R, RS) - $^{C6, N7}_{C8, N9}$ $^{C10, N11}$ (-D)**

• When P, E port outlets are indicated on the U side or D side, the P, E ports on the opposite side are plugged.
• External pilot port positions and silencer discharge port positions are the same as P, E port outlet positions.

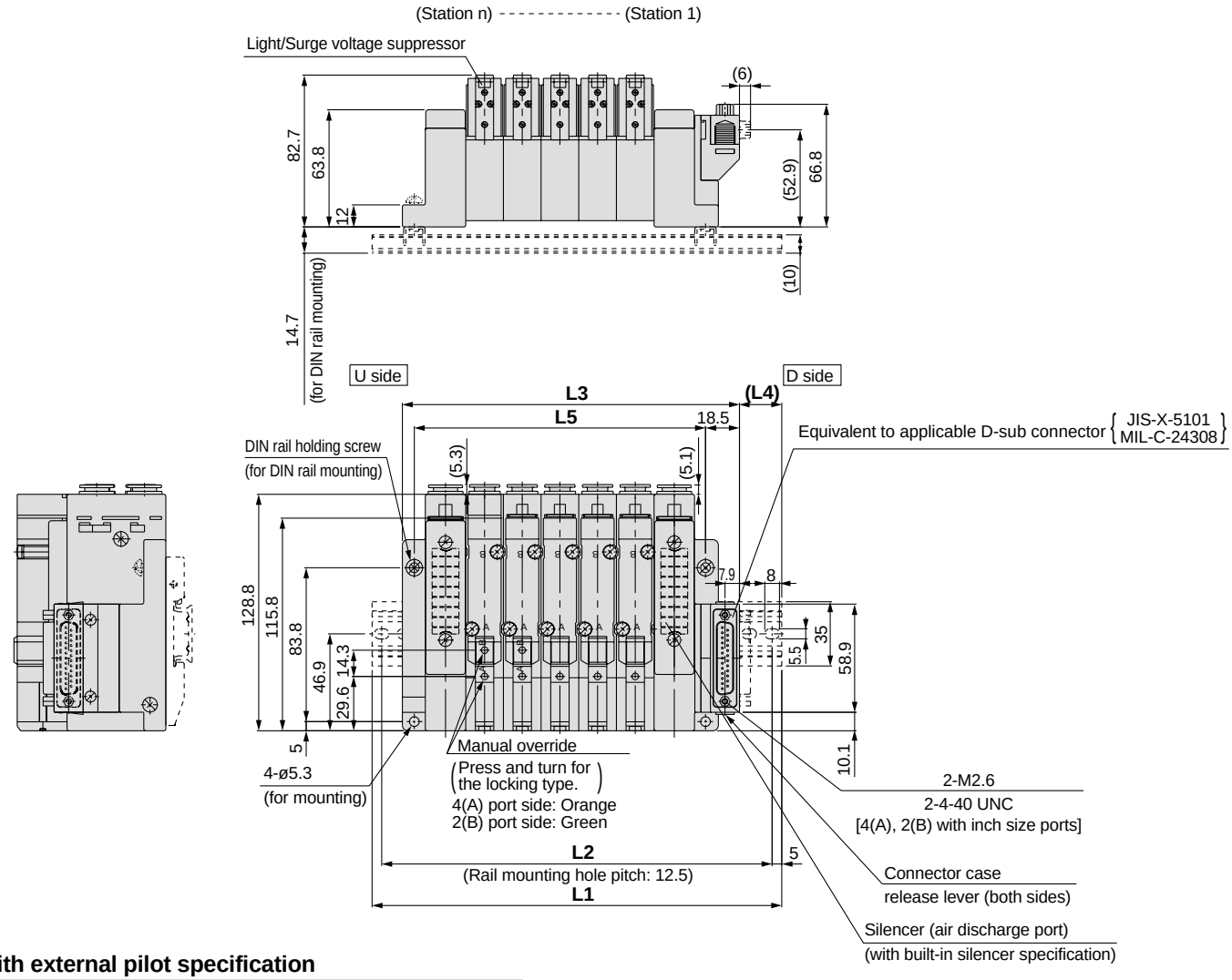

With external pilot specification

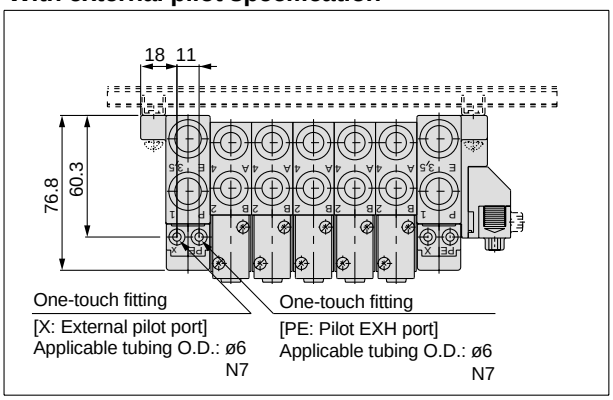

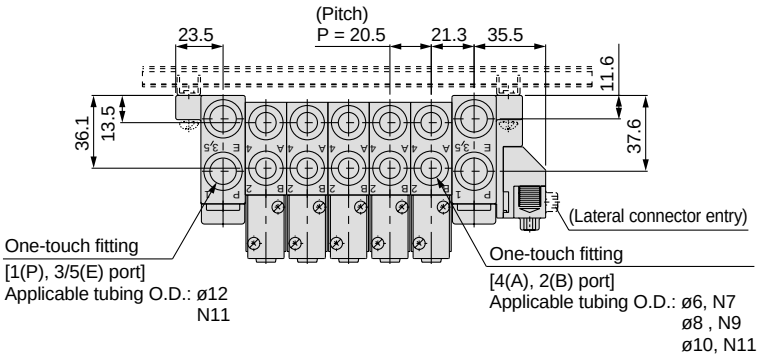

L dimensions

n: Stations

L \ n	2	3	4	5	6	7	8	9	10	11	12	13	14	15	16	17	18	19	20
L1	160.5	173	198	223	235.5	260.5	285.5	298	323	348	360.5	385.5	398	423	448	460.5	485.5	510.5	523
L2	150	162.5	187.5	212.5	225	250	275	287.5	312.5	337.5	350	375	387.5	412.5	437.5	450	475	500	512.5
L3	122	142.5	163	183.5	204	224.5	245	265.5	286	306.5	327	347.5	368	388.5	409	429.5	450	470.5	491
L4	22.5	18.5	20.5	23	19	21	23.5	19.5	21.5	24	20	22	18	20.5	22.5	18.5	21	23	19
L5	97	117.5	138	158.5	179	199.5	220	240.5	261	281.5	302	322.5	343	363.5	384	404.5	425	445.5	466

Dimensions: Series SV4000 for D-sub Connector

• **Tie-rod base manifold: SS5V4-10FD$\frac{1}{2}$ - Stations $\begin{smallmatrix}U\\D\\B\end{smallmatrix}$ (S, R, RS) - $\begin{smallmatrix}02,\\03,\end{smallmatrix}$ $\begin{smallmatrix}C8,\\C10,\\C12,\end{smallmatrix}$ $\begin{smallmatrix}N9\\N11\end{smallmatrix}$ (-D)**

• When P, E port outlets are indicated on the U side or D side, the P, E ports on the opposite side are plugged.
• External pilot port positions and silencer discharge port positions are the same as P, E port outlet positions.

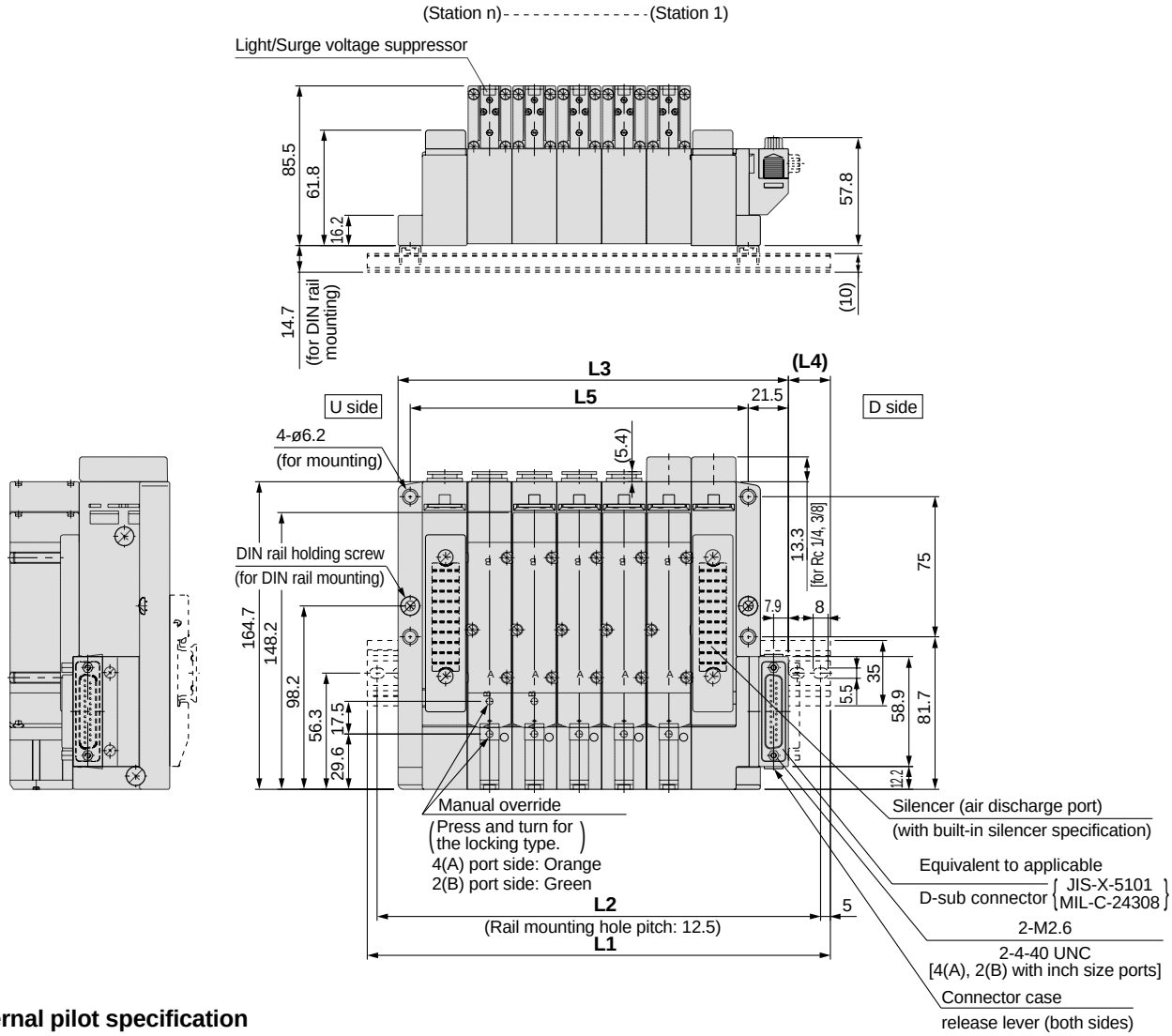

With external pilot specification

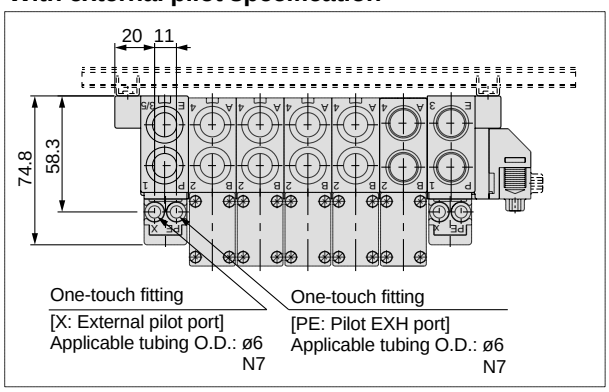

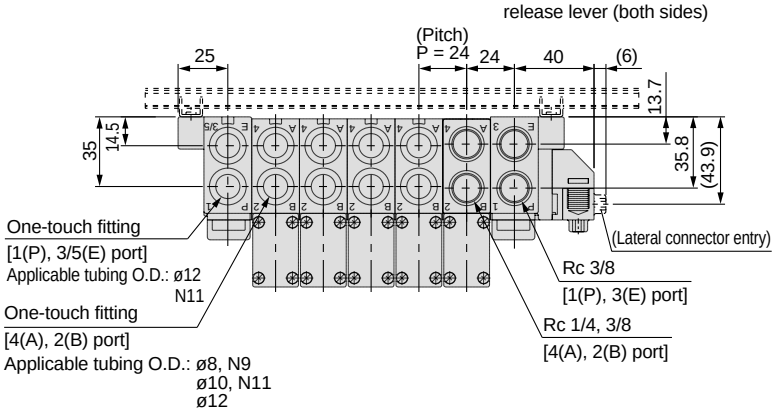

L dimensions

n: Stations

L \ n	2	3	4	5	6	7	8	9	10	11	12	13	14	15	16	17	18	19	20
L1	173	198	223	248	273	298	310.5	335.5	360.5	385.5	410.5	435.5	460.5	485.5	510.5	535.5	560.5	585.5	610.5
L2	162.5	187.5	212.5	237.5	262.5	287.5	300	325	350	375	400	425	450	475	500	525	550	575	600
L3	137	161	185	209	233	257	281	305	329	353	377	401	425	449	473	497	521	545	569
L4	21	21.5	22	22.5	23	23.5	18	18.5	19	19.5	20	20.5	21	21.5	22	22.5	23	23.5	24
L5	109	133	157	181	205	229	253	277	301	325	349	373	397	421	445	469	493	517	541

Flat Ribbon Cable

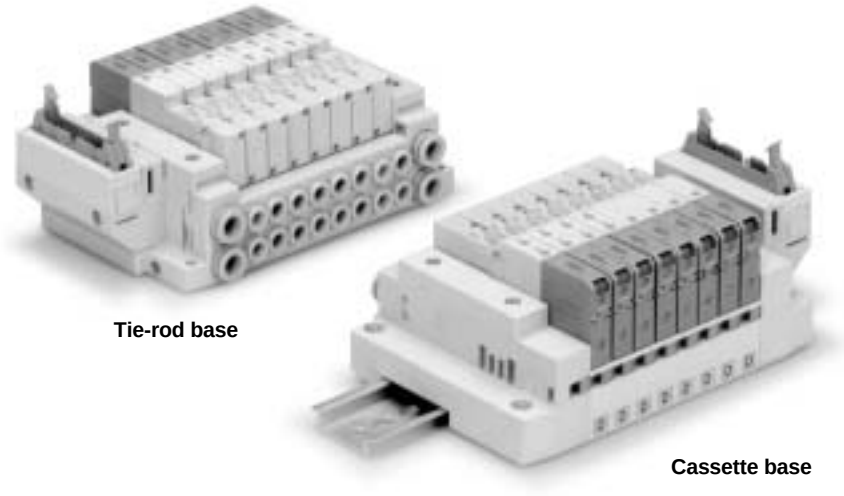

Applicable series	Cassette base manifold SV1000/SV2000
	Tie-rod base manifold SV1000/SV2000/SV3000/SV4000
	• Number of connectors: 26, 20, 10 pins • With strain relief Conforms to MIL-C-83503

Flat Ribbon Cable Connector
Series SV

How to Order

• Tie-rod base

SS5V 1 — 10 P D 1 — 05 U □ — □ — □

• Cassette base

SS5V 1 — 16 P D 1 — 05 U □ — □ — □

Series

1	SV1000
2	SV2000
3	SV3000
4	SV4000

Connector type

P	Flat ribbon cable connector: 26 pins
PG	Flat ribbon cable connector: 20 pins
PH	Flat ribbon cable connector: 10 pins

Valve stations

P: Flat ribbon cable 26 pins

02	2 stations	Note 1) Double wiring specification
⋮	⋮	
12	12 stations	
02	2 stations	Note 2) Specified layout (Up to 24 solenoids possible.)
⋮	⋮	
20	20 stations	

PH: Flat ribbon cable 10 pins

02	2 stations	Note 1) Double wiring specification
⋮	⋮	
04	4 stations	
02	2 stations	Note 2) Specified layout (Up to 8 solenoids possible.)
⋮	⋮	
08	8 stations	

PG: Flat ribbon cable 20 pins

02	2 stations	Note 1) Double wiring specification
⋮	⋮	
09	9 stations	
02	2 stations	Note 2) Specified layout (Up to 18 solenoids possible.)
⋮	⋮	
18	18 stations	

Mounting

Nil	Direct mount	
D	DIN rail mount (with DIN rail)	
Note) D0	DIN rail mount (without DIN rail)	
D3	For 3 stations	When a DIN rail longer than the specified stations is required. (Specify a rail longer than the standard length.)
⋮	⋮	
D20	For 20 stations	

Note) In case of D0, only DIN rail fittings are attached

Series

1	SV1000
2	SV2000

Connector entry direction

1	Upward
2	Lateral

P, E port position

U	U side (2 to 10 stations)
D	D side (2 to 10 stations)
B	Both sides (2 to 20 stations)

Pilot specification

Nil	Internal pilot specification
S	Internal pilot/Built-in silencer
R	External pilot specification
RS	External pilot/Built-in silencer

DIN rail length

Nil	Standard length	
3	For 3 stations	Specify a rail longer than the standard length.
⋮	⋮	
20	For 20 stations	

Valve stations

Series SV1000

P: Flat ribbon cable 26 pins

02	2 stations	Note 1) Double wiring specification
⋮	⋮	
09	9 stations	
02	2 stations	Note 2) Specified layout (Up to 18 solenoids possible.)
⋮	⋮	
18	18 stations	

PH: Flat ribbon cable 10 pins

02	2 stations	Note 1) Double wiring specification
⋮	⋮	
04	4 stations	
02	2 stations	Note 2) Specified layout (Up to 8 solenoids possible.)
⋮	⋮	
08	8 stations	

PG: Flat ribbon cable 20 pins

02	2 stations	Note 1) Double wiring specification
⋮	⋮	
09	9 stations	
02	2 stations	Note 2) Specified layout (Up to 18 solenoids possible.)
⋮	⋮	
18	18 stations	

Series SV2000

P: Flat ribbon cable 26 pins

02	2 stations	Note 1) Double wiring specification
⋮	⋮	
12	12 stations	
02	2 stations	Note 2) Specified layout (Up to 24 solenoids possible.)
⋮	⋮	
20	20 stations	

PH: Flat ribbon cable 10 pins

02	2 stations	Note 1) Double wiring specification
⋮	⋮	
04	4 stations	
02	2 stations	Note 2) Specified layout (Up to 8 solenoids possible.)
⋮	⋮	
08	8 stations	

PG: Flat ribbon cable 20 pins

02	2 stations	Note 1) Double wiring specification
⋮	⋮	
09	9 stations	
02	2 stations	Note 2) Specified layout (Up to 18 solenoids possible.)
⋮	⋮	
18	18 stations	

Note 1) Double wiring specification: Single, double and 3 position solenoid valves can be used on all manifold stations.
Use of a single solenoid will result in an unused control signal. If this is not desired, order with a specified layout.

Note 2) Specified layout: Indicate wiring specifications on a manifold specification sheet. (Note that double and 3 position valves cannot be used where single solenoid wiring has been specified.)

How to Order Manifold Assemblies (Order Example)

Example (SV1000)

Manifold
SS5V1-16PD1-06B-C6 (1 set)

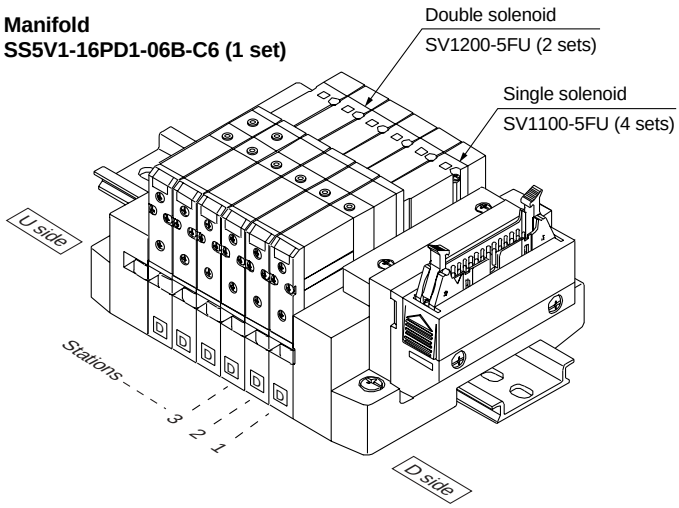

SS5V1-16PD1-06B-C6 ..... 1 set (manifold part no.)
∗ SV1100-5FU ..... 4 sets (single solenoid part no.)
∗ SV1200-5FU ..... 2 sets (double solenoid part no.)

How to Order Solenoid Valves

SV 1 1 0 0 □ □ — 5 F □ □ — □

Note) Available with manifold block for station additions. Refer to pages 77 and 81.

Series

1	SV1000
2	SV2000
3	SV3000
4	SV4000

Type of actuation

1	2 position single solenoid
2	2 position double solenoid
3	3 position closed center
4	3 position exhaust center
5	3 position pressure center
A	4 position dual 3 port valve: N.C./N.C.
B	4 position dual 3 port valve: N.O./N.O.
C	4 position dual 3 port valve: N.C./N.O.

∗ 4 position dual 3 port valves are applicable to series SV1000 and SV2000 only.

Manual override

Nil: Non-locking push type	**D:** Slotted locking type
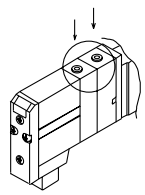	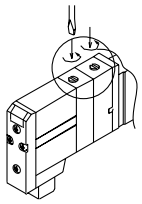

Light/Surge voltage suppressor

U	With light and surge voltage suppressor
R	With surge voltage suppressor

Rated voltage

5	24VDC
6	12VDC

Pilot specification

Nil	Internal pilot
R	External pilot

∗ External pilot specification is not available for 4 position dual 3 port valves.

Back pressure check valve

Nil	None
K	Built-in

∗ Built-in back pressure check valve type is applicable to series SV1000 only.
∗ Back pressure check valve is not available for 3 position closed center and 3 position pressure center.
∗ Flow rate with the built-in back pressure check valve is reduced approximately 20%.

A, B port size (metric)

Symbol	A, B port	P, E port	Applicable series
C3	ø3.2 One-touch fitting	ø8 One-touch fitting	SV1000
C4	ø4 One-touch fitting		
C6	ø6 One-touch fitting		
C4	ø4 One-touch fitting	ø10 One-touch fitting	SV2000
C6	ø6 One-touch fitting		
C8	ø8 One-touch fitting		
C6	ø6 One-touch fitting	ø12 One-touch fitting	SV3000
C8	ø8 One-touch fitting		
C10	ø10 One-touch fitting		
C8	ø8 One-touch fitting	ø12 One-touch fitting	SV4000
C10	ø10 One-touch fitting		
C12	ø12 One-touch fitting		
02	Rc 1/4	Rc 3/8	
03	Rc 3/8		
02F	G 1/4	G 3/8	
03F	G 3/8		
M	A, B ports mixed		

A, B port size (inch)

Symbol	A, B port	P, E port	Applicable series
N1	ø1/8" One-touch fitting	ø5/16" One-touch fitting	SV1000
N3	ø5/32" One-touch fitting		
N7	ø1/4" One-touch fitting		
N3	ø5/32" One-touch fitting	ø3/8" One-touch fitting	SV2000
N7	ø1/4" One-touch fitting		
N9	ø5/16" One-touch fitting		
N7	ø1/4" One-touch fitting	ø3/8" One-touch fitting	SV3000
N9	ø5/16" One-touch fitting		
N11	ø3/8" One-touch fitting		
N9	ø5/16" One-touch fitting	ø3/8" One-touch fitting	SV4000
N11	ø3/8" One-touch fitting		
02N	NPT 1/4	NPT 3/8	
03N	NPT 3/8		
02T	NPTF 1/4	NPTF 3/8	
03T	NPTF 3/8		
M	A, B ports mixed		

∗ In case of mixed specification (M), indicate separately on a manifold specification sheet.

Manifold Electrical Wiring

10P/16P Flat Ribbon Cable Type (26 pins)

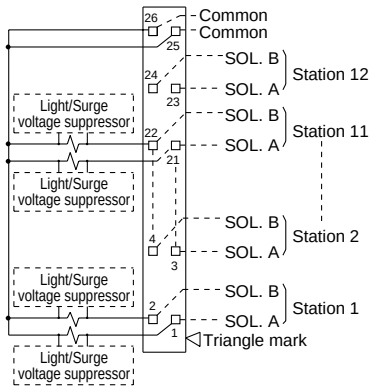

- This circuit has double wiring specifications for up to 12 stations. Since the usable number of solenoids differs depending on the manifold type, refer to the table below. In the case of single solenoids, connect to SOL. A. Furthermore, when wiring is specified on a manifold specification sheet, connections are made without skipping any connectors, and signals A for single and A, B for double are in order 1→2→3→4, etc.
- Stations are counted starting from station 1 on the D side (connector side).
- Since terminal numbers are not indicated on flat ribbon cables, use the triangle mark as a reference.
- Since solenoid valves do not have polarity, either the +COM or –COM can be used.

Usable number of solenoids

Model		Maximum number of solenoids
Tie-rod base type 10	SV1000 to SV4000	24
Cassette base type 16	SV1000	18
	SV2000	24

10PG/16PG Flat Ribbon Cable Type (20 pins)

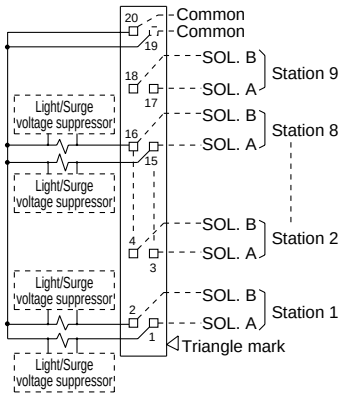

- This circuit has double wiring specifications for up to 9 stations. Since the usable number of solenoids differs depending on the manifold type, refer to the table below. In the case of single solenoids, connect to SOL. A. Furthermore, when wiring is specified on a manifold specification sheet,connections are made without skipping any connectors, and signals A for single and A, B for double are in order 1→2→3→4, etc.
- Stations are counted starting from station 1 on the D side (connector side).
- Since terminal numbers are not indicated on flat ribbon cables, use the triangle mark as a reference.
- Since solenoid valves do not have polarity, either the +COM or –COM can be used.

Usable number of solenoids

Model		Maximum number of solenoids
Tie-rod base type 10	SV1000 to SV4000	18
Cassette base type 16	SV1000	
	SV2000	

10PH/16PH Flat Ribbon Cable Type (10 pins)

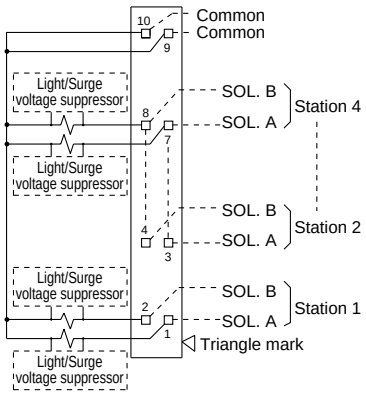

- This circuit has double wiring specifications for up to 4 stations. Since the usable number of solenoids differs depending on the manifold type, refer to the table below. In the case of single solenoids, connect to SOL. A. Furthermore, when wiring is specified on a manifold specification sheet, connections are made without skipping any connectors, and signals A for single and A, B for double are in order 1→2→3→4, etc.
- Stations are counted starting from station 1 on the D side (connector side).
- Since terminal numbers are not indicated on flat ribbon cables, use the triangle mark as a reference.
- Since solenoid valves do not have polarity, either the +COM or –COM can be used.

Usable number of solenoids

Model		Maximum number of solenoids
Tie-rod base type 10	SV1000 to SV4000	8
Cassette base type 16	SV1000	
	SV2000	

Dimensions: Series SV1000 for Flat Ribbon Cable

• **Cassette base manifold:** **SS5V1-16** P/PG/PH **D** 1/2 **-** Stations U/D/B **(S, R, RS) -** C3, N1 / C4, N3 / C6, N7

• When P, E port outlets are indicated on the U side or D side, the P, E ports on the opposite side are plugged.
• External pilot port positions and silencer discharge port positions are the same as P, E port outlet positions.

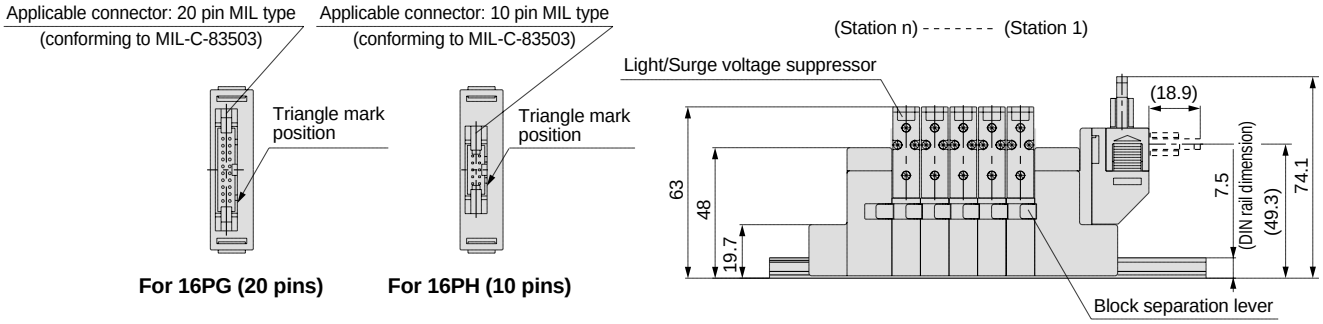

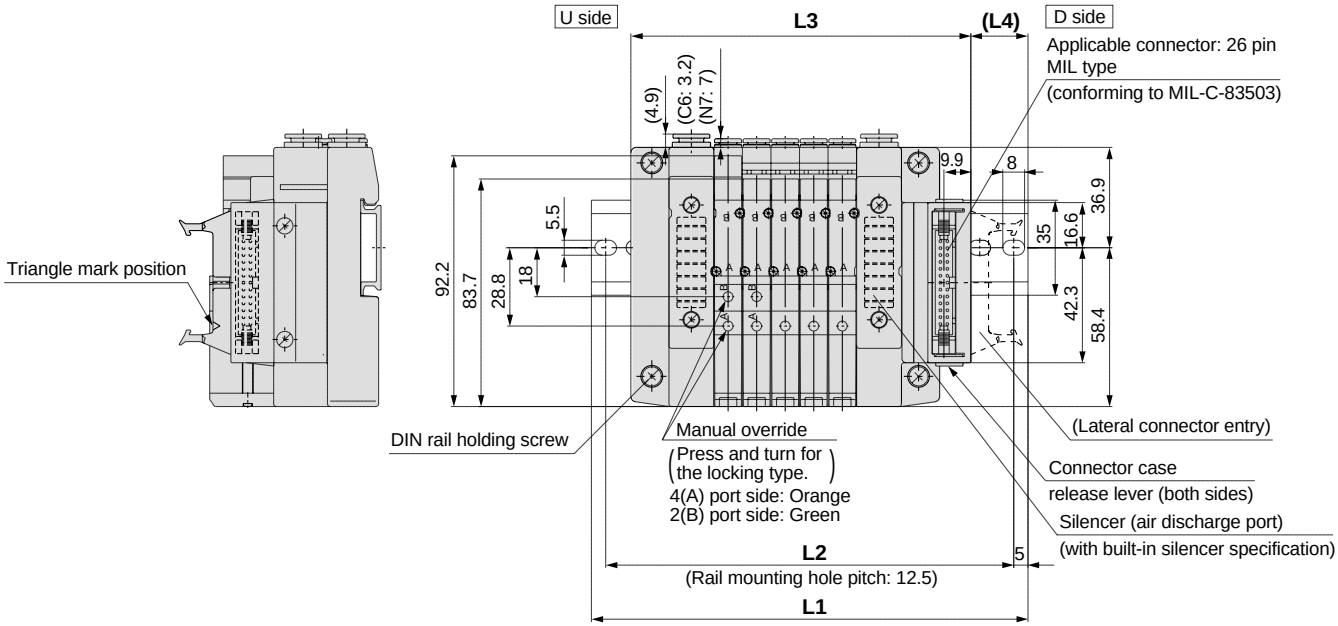

With external pilot specification

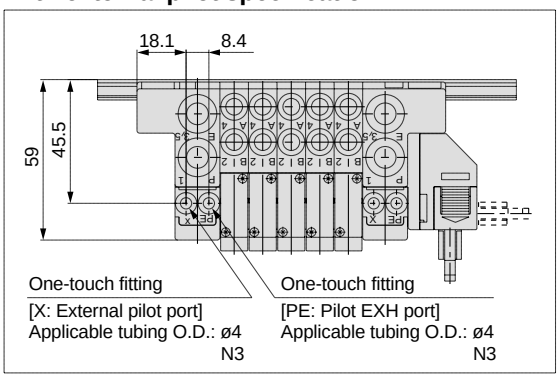

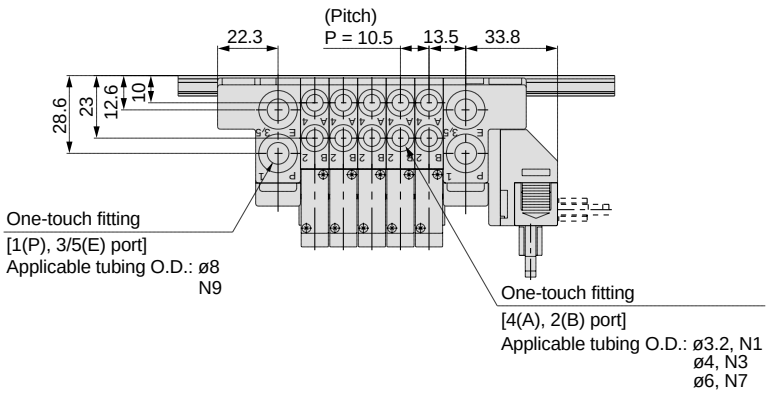

L dimensions

n: Stations

L \ n	2	3	4	5	6	7	8	9	10	11	12	13	14	15	16	17	18
L1	135.5	135.5	148	160.5	173	185.5	198	198	210.5	223	235.5	248	260.5	260.5	273	285.5	298
L2	125	125	137.5	150	162.5	175	187.5	187.5	200	212.5	225	237.5	250	250	262.5	275	287.5
L3	93.5	104	114.5	125	135.5	146	156.5	167	177.5	188	198.5	209	219.5	230	240.5	251	261.5
L4	24.5	19	20	21	22	23	24	19	20	21	22	23	24	18.5	19.5	20.5	21.5

Dimensions: Series SV2000 for Flat Ribbon Cable

• **Cassette base manifold: SS5V2-16 P/PG/PH D 1/2 - Stations - U/D/B (S, R, RS) - C4, N3/C6, N7/C8, N9**

• When P, E port outlets are indicated on the U side or D side, the P, E ports on the opposite side are plugged.
• External pilot port positions and silencer discharge port positions are the same as P, E port outlet positions.

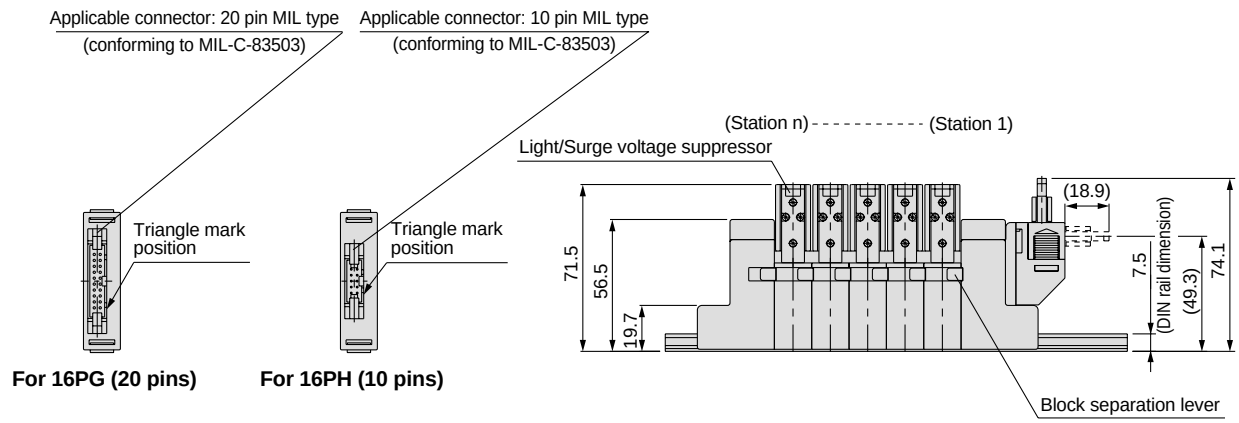

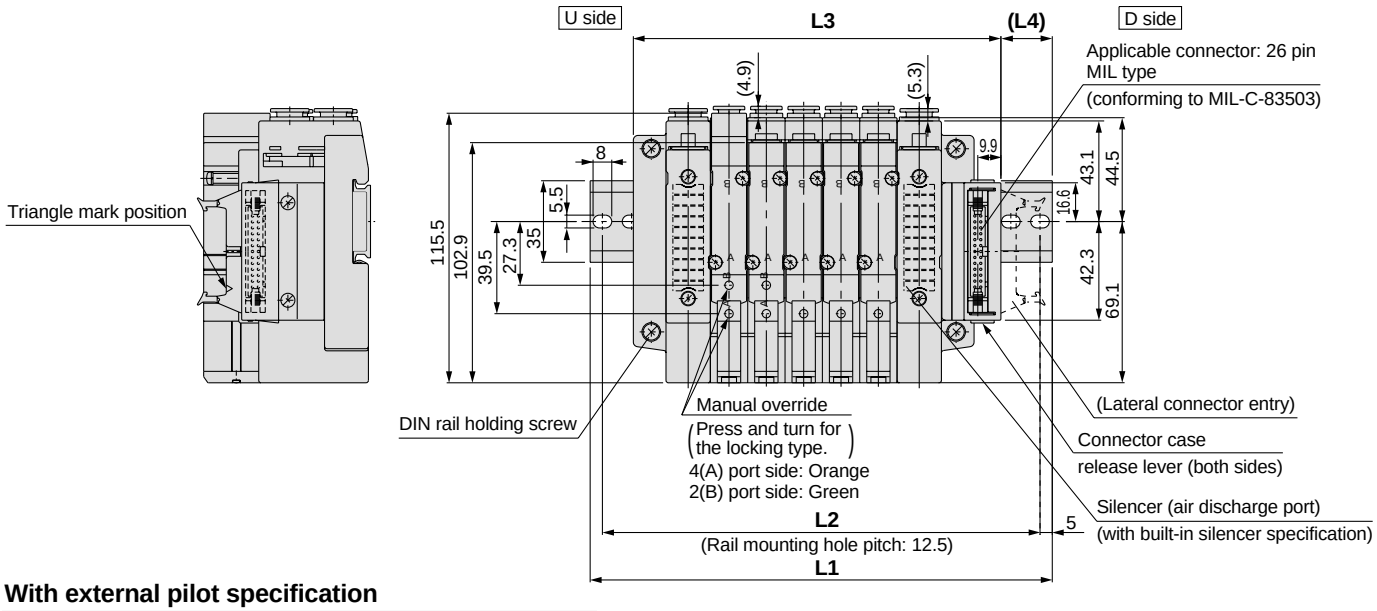

With external pilot specification

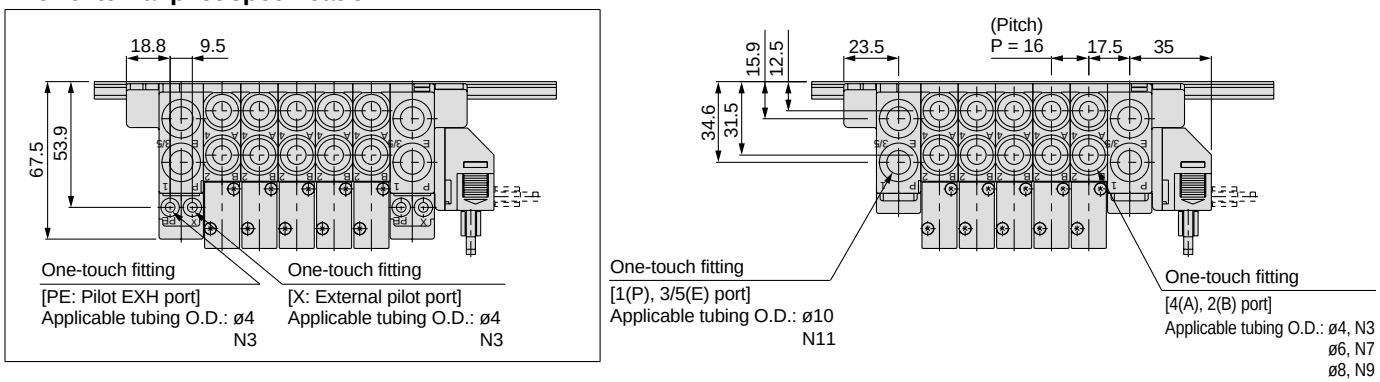

L dimensions

n: Stations

L \ n	2	3	4	5	6	7	8	9	10	11	12	13	14	15	16	17	18	19	20
L1	148	160.5	173	198	210.5	223	235.5	260.5	273	285.5	310.5	323	335.5	348	373	385.5	398	423	435.5
L2	137.5	150	162.5	187.5	200	212.5	225	250	262.5	275	300	312.5	325	337.5	362.5	375	387.5	412.5	425
L3	109.5	125.5	141.5	157.5	173.5	189.5	205.5	221.5	237.5	253.5	269.5	285.5	301.5	317.5	333.5	349.5	365.5	381.5	397.5
L4	22.5	21	19	23.5	22	20	18.5	23	21	19.5	24	22	20.5	18.5	23	21.5	19.5	24	22.5

Dimensions: Series SV1000 for Flat Ribbon Cable

• **Tie-rod base manifold:** **SS5V1-10** P/PG/PH **D** 1/2 **-** [Stations] U/D/B **(S, R, RS) -** C3, N1 / C4, N3 / C6, N7 **(-D)**

• When P, E port outlets are indicated on the U side or D side, the P, E ports on the opposite side are plugged.
• External pilot port positions and silencer discharge port positions are the same as P, E port outlet positions.

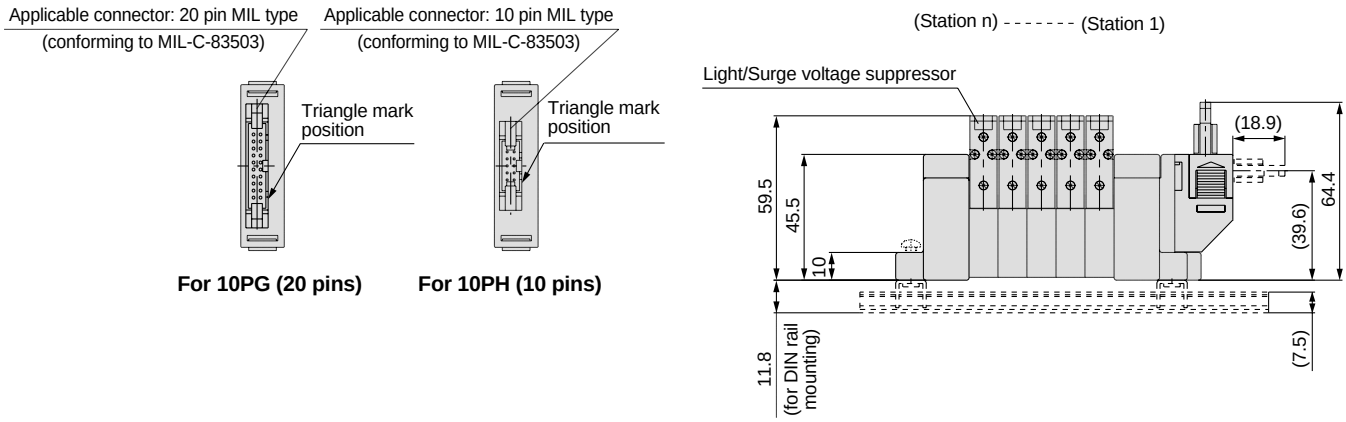

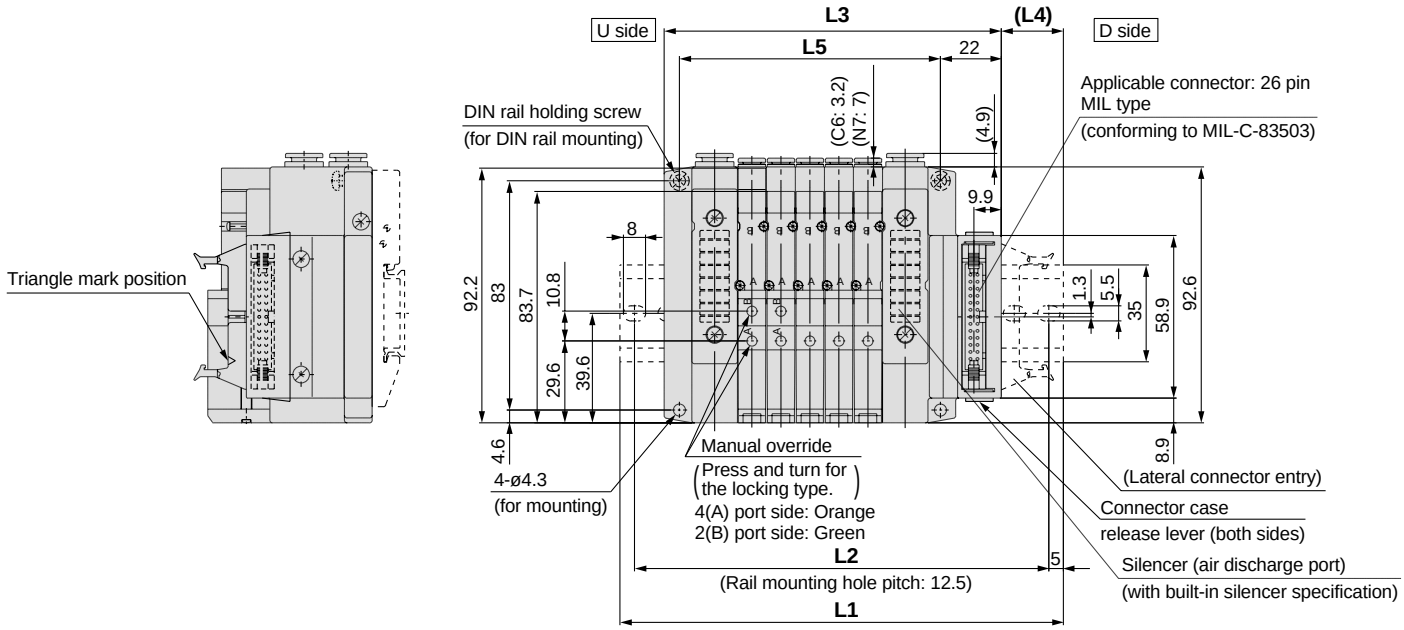

With external pilot specification

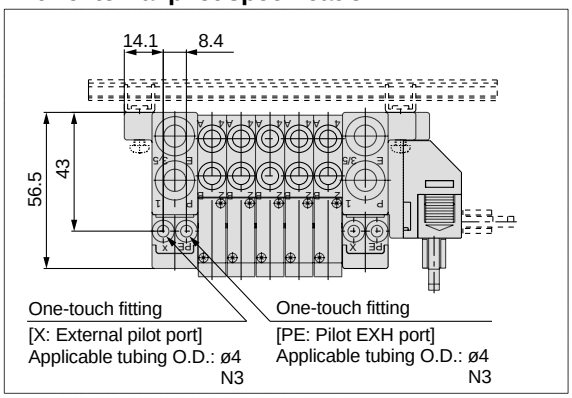

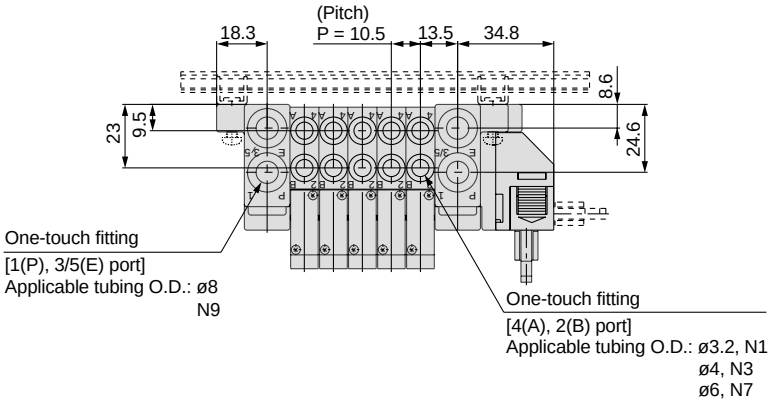

L dimensions

n: Stations

L \ n	2	3	4	5	6	7	8	9	10	11	12	13	14	15	16	17	18	19	20
L1	123	135.5	148	160.5	173	173	185.5	198	210.5	223	235.5	248	248	260.5	273	285.5	298	310.5	310.5
L2	112.5	125	137.5	150	162.5	162.5	175	187.5	200	212.5	225	237.5	237.5	250	262.5	275	287.5	300	300
L3	90.5	101	111.5	122	132.5	143	153.5	164	174.5	185	195.5	206	216.5	227	237.5	248	258.5	269	279.5
L4	19.5	20.5	21.5	22.5	23.5	18.5	19.5	20.5	21.5	22.5	23.5	24.5	19	20	21	22	23	24	19
L5	63	73.5	84	94.5	105	115.5	126	136.5	147	157.5	168	178.5	189	199.5	210	220.5	231	241.5	252

Dimensions: Series SV2000 for Flat Ribbon Cable

• **Tie-rod base manifold:** **SS5V2-10** P/PG/PH **D** 1/2 **-** Stations U/D/B **(S, R, RS)-** C4, N3/C6, N7/C8, N9 **(-D)**

• When P, E port outlets are indicated on the U side or D side, the P, E ports on the opposite side are plugged.
• External pilot port positions and silencer discharge port positions are the same as P, E port outlet positions.

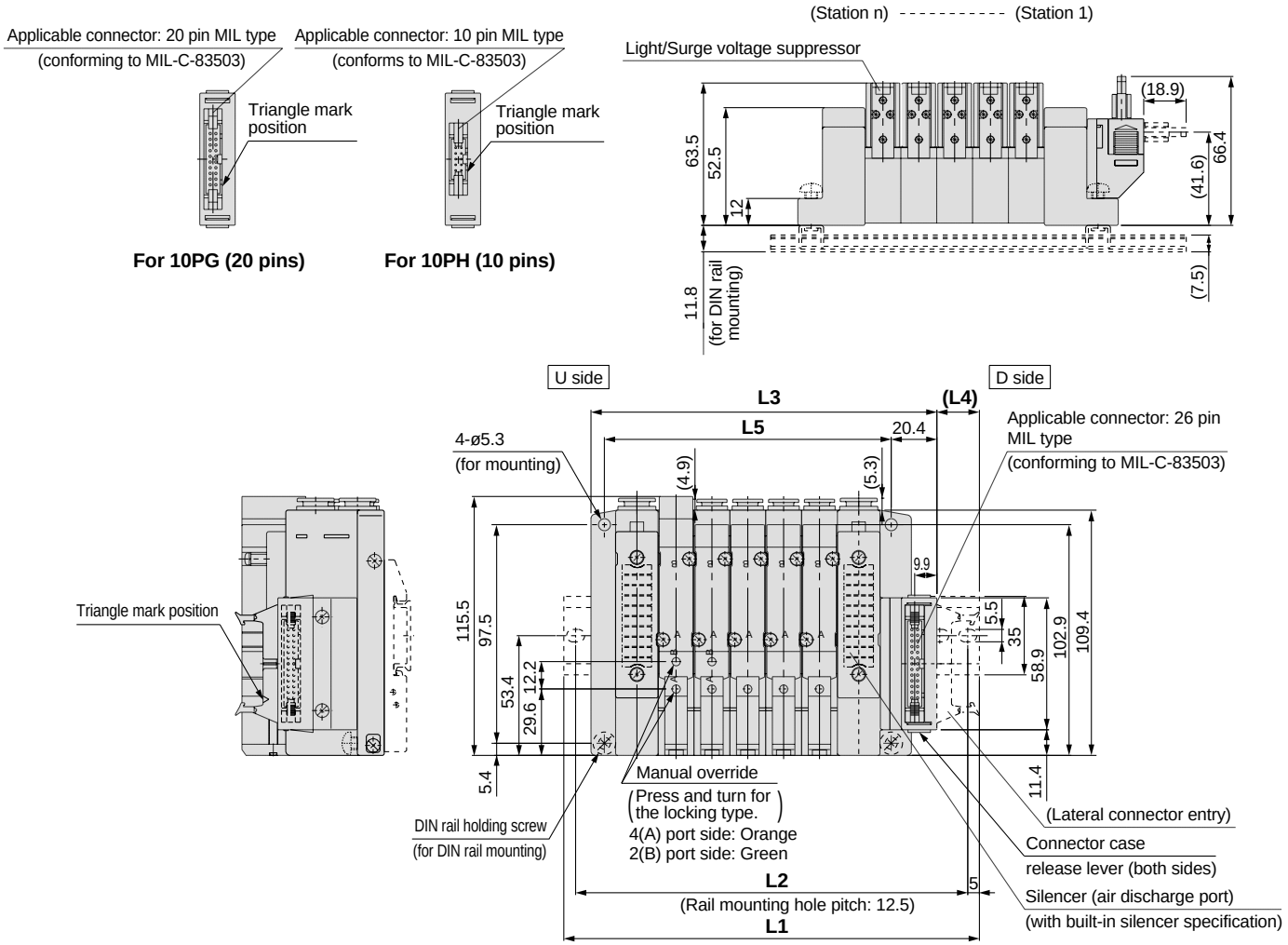

With external pilot specification

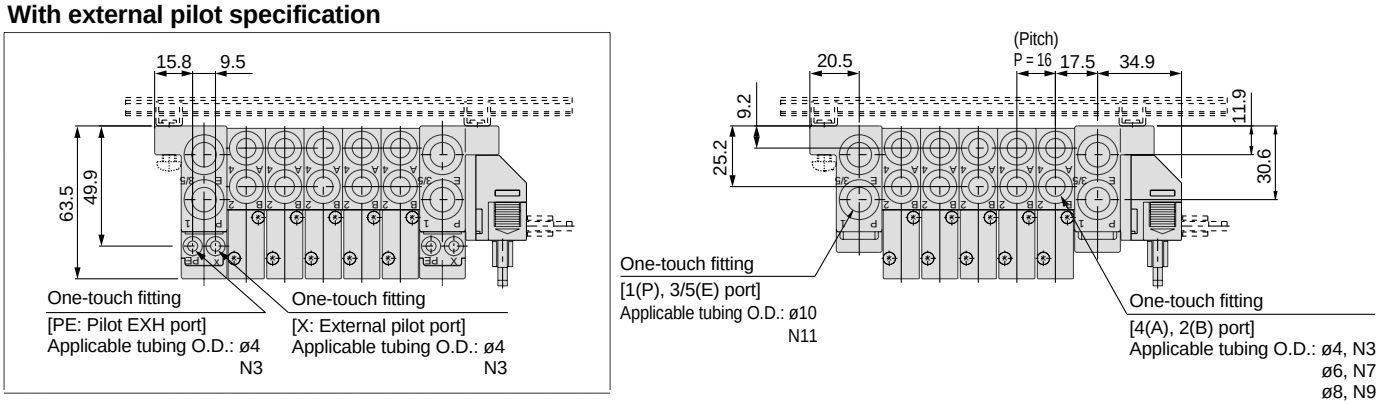

L dimensions

n: Stations

L \ n	2	3	4	5	6	7	8	9	10	11	12	13	14	15	16	17	18	19	20
L1	148	160.5	173	185.5	210.5	223	235.5	248	273	285.5	298	323	335.5	348	360.5	385.5	398	410.5	435.5
L2	137.5	150	162.5	175	200	212.5	225	237.5	262.5	275	287.5	312.5	325	337.5	350	375	387.5	400	425
L3	106.4	122.4	138.4	154.4	170.4	186.4	202.4	218.4	234.4	250.4	266.4	282.4	298.4	314.4	330.4	346.4	362.4	378.4	394.4
L4	24.5	22.5	20.5	19	23.5	21.5	20	18.5	22.5	21	19.5	23.5	22	20.5	18.5	23	21	19.5	24
L5	80	96	112	128	144	160	176	192	208	224	240	256	272	288	304	320	336	352	368

Dimensions: Series SV3000 for Flat Ribbon Cable

• **Tie-rod base manifold: SS5V3-10 P/PG/PH D 1/2 - Stations U/D/B (S, R, RS) - C6, N7 / C8, N9 / C10, N11 (-D)**

• When P, E port outlets are indicated on the U side or D side, the P, E ports on the opposite side are plugged.
• External pilot port positions and silencer discharge port positions are the same as P, E port outlet positions.

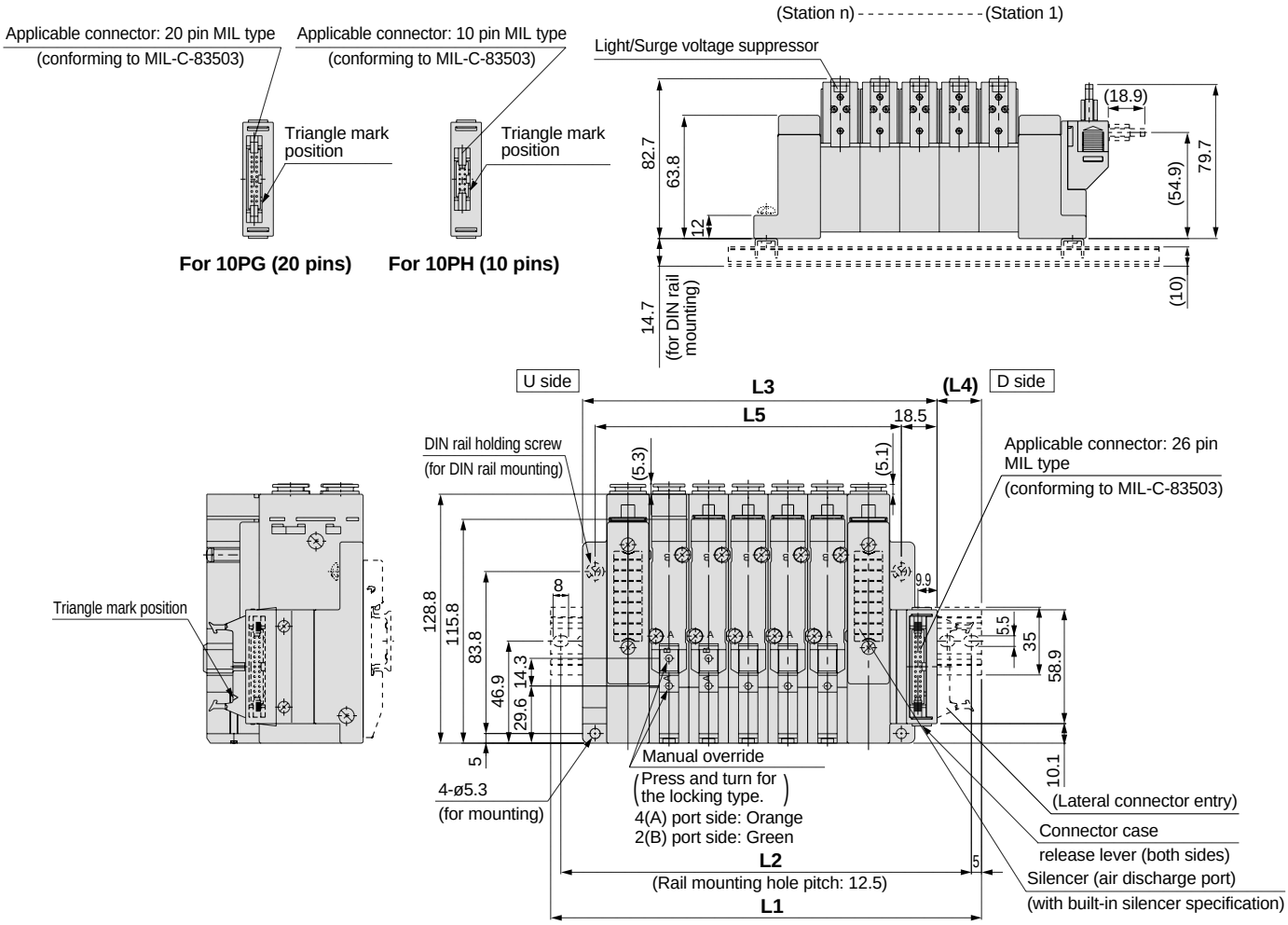

With external pilot specification

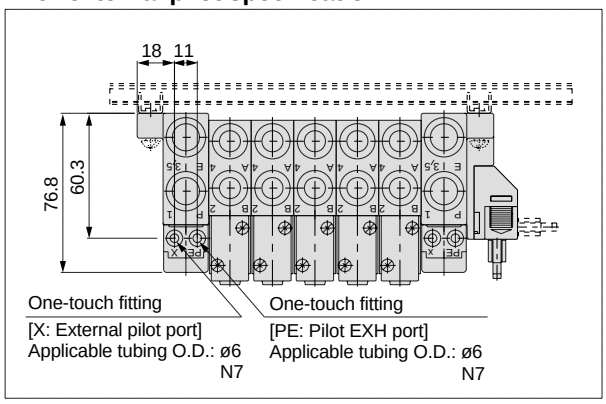

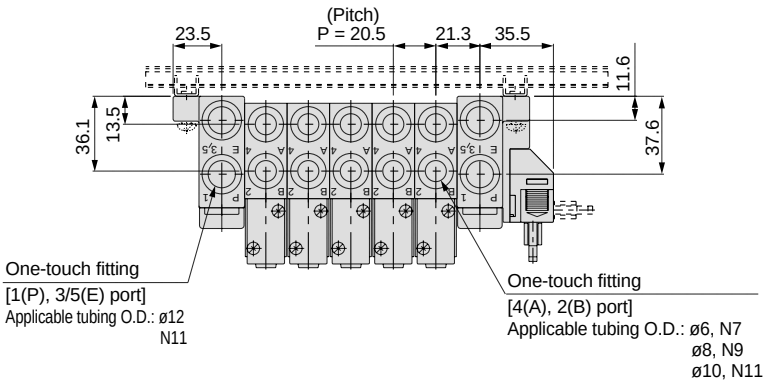

L dimensions

n : Stations

L \ n	2	3	4	5	6	7	8	9	10	11	12	13	14	15	16	17	18	19	20
L1	160.5	173	198	223	235.5	260.5	285.5	298	323	348	360.5	385.5	398	423	448	460.5	485.5	510.5	523
L2	150	162.5	187.5	212.5	225	250	275	287.5	312.5	337.5	350	375	387.5	412.5	437.5	450	475	500	512.5
L3	122	142.5	163	183.5	204	224.5	245	265.5	286	306.5	327	347.5	368	388.5	409	429.5	450	470.5	491
L4	22.5	18.5	21	23	19	21.5	23.5	19.5	22	24	20	22.5	18.5	20.5	23	19	21	23.5	19.5
L5	97	117.5	138	158.5	179	199.5	220	240.5	261	281.5	302	322.5	343	363.5	384	404.5	425	445.5	466

Dimensions: Series SV4000 for Flat Ribbon Cable

• **Tie-rod base manifold:** **SS5V4-10** P/PG/PH **D** 1/2 **-** [Stations] U/D/B **(S, R, RS) -** 02, 03, C8, C10, C12, N9, N11 **(-D)**

• When P, E port outlets are indicated on the U side or D side, the P, E ports on the opposite side are plugged.
• External pilot port positions and silencer discharge port positions are the same as P, E port outlet positions.

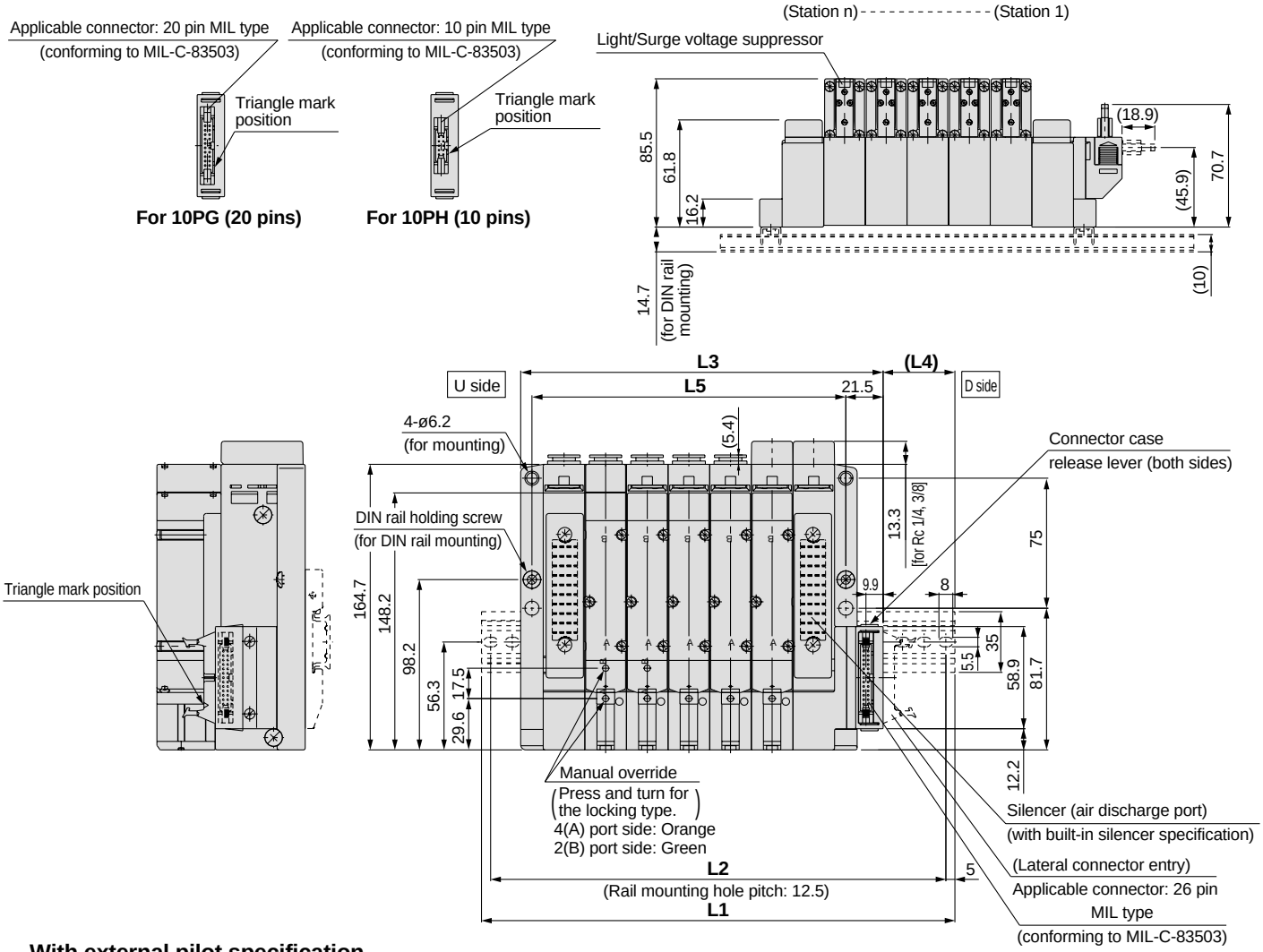

With external pilot specification

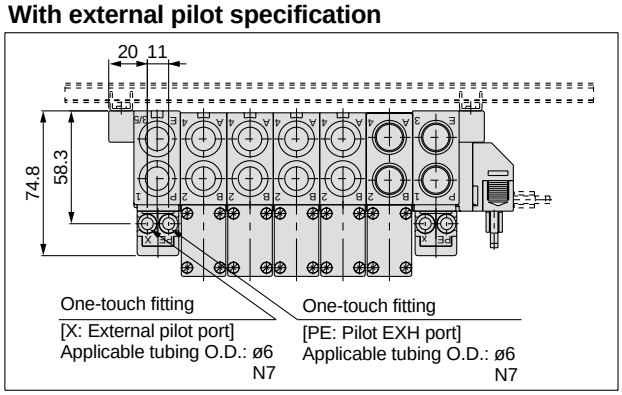

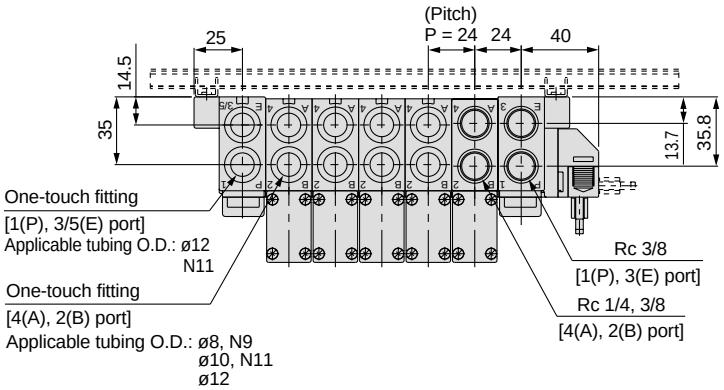

L dimensions

n: Stations

L \ n	2	3	4	5	6	7	8	9	10	11	12	13	14	15	16	17	18	19	20
L1	185.5	210.5	235.5	260.5	285.5	310.5	335.5	348	373	398	423	448	473	498	523	548	573	598	623
L2	175	200	225	250	275	300	325	337.5	362.5	387.5	412.5	437.5	462.5	487.5	512.5	537.5	562.5	587.5	612.5
L3	137	161	185	209	233	257	281	305	329	353	377	401	425	449	473	497	521	545	569
L4	31.5	31.5	31.5	31.5	31.5	31.5	31.5	31.5	31.5	31.5	31.5	31.5	31.5	31.5	31.5	31.5	31.5	31.5	31.5
L5	109	133	157	181	205	229	253	277	301	325	349	373	397	421	445	469	493	517	541

Type 16: Cassette Base Manifold Exploded View

Type 16C (circular connector type) manifold

⚠Caution

Mounting screw tightening torques

M2: 0.15N·m
M3: 0.6N·m
M4: 1.4N·m

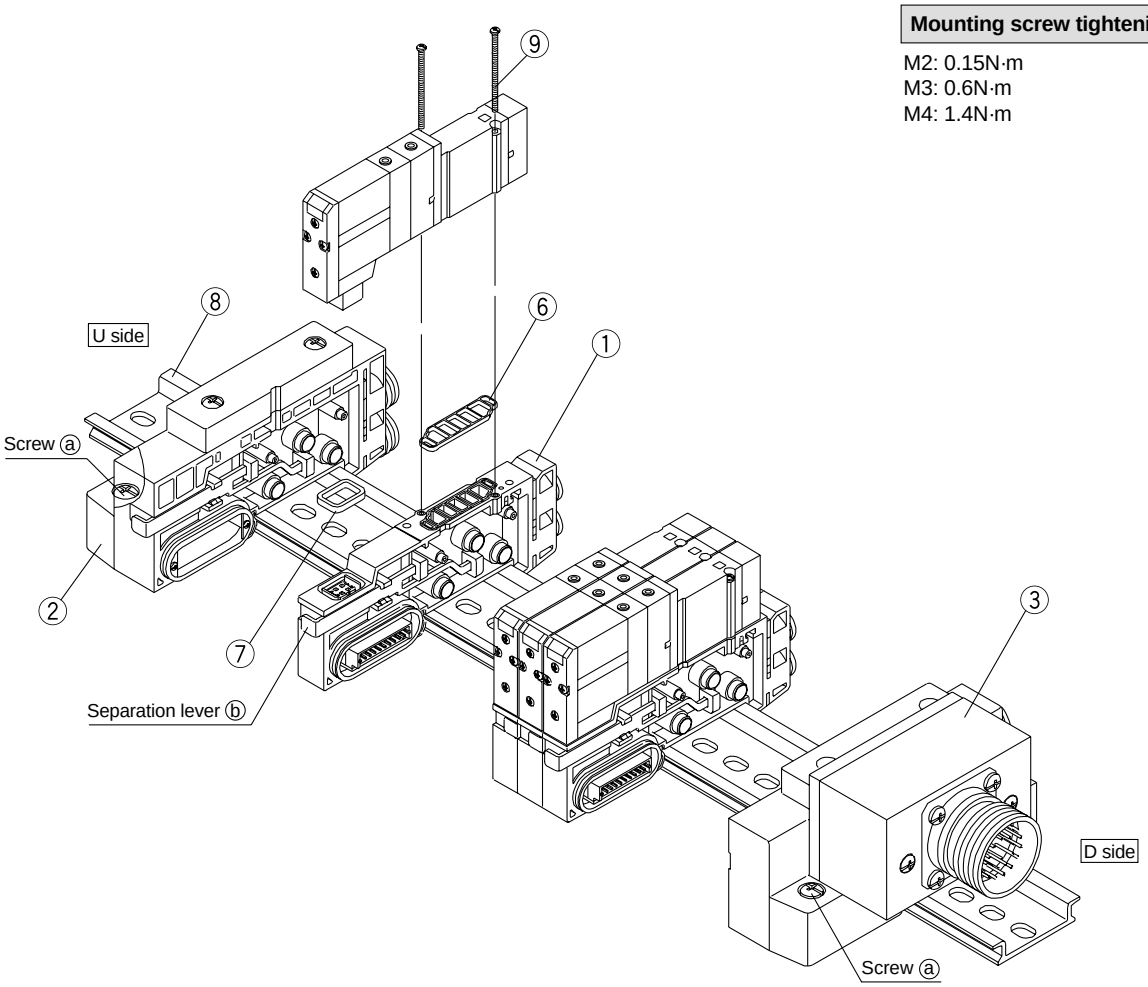

③ Supply/Exhaust block assembly		
EX500 (type 16SA□W) 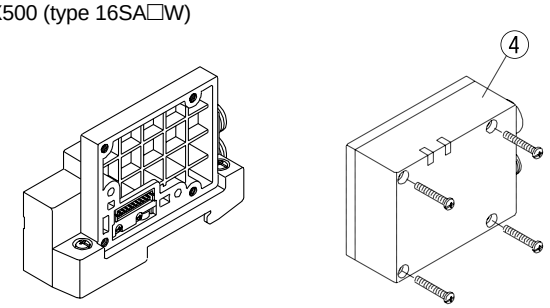	EX120 (type 16S3□) 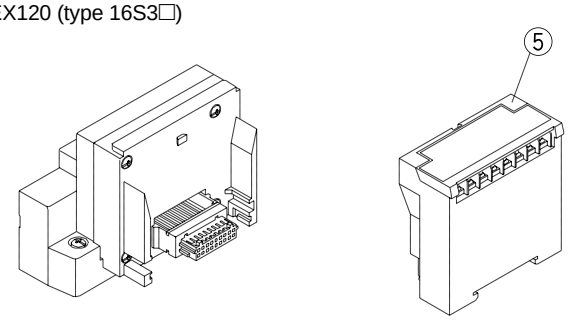	
Circular connector (type 16C) 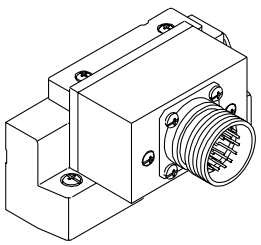	D-sub connector (type 16F□) 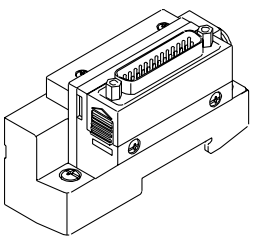	Flat ribbon cable connector (type 16P□) 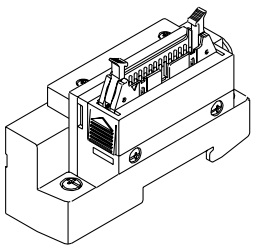

① Manifold block assembly part numbers

Series	Wiring specification	Manifold block assembly part no.	Note
SV1000	For single	SV1000-50-3A-□□	C3: With ø3.2 One-touch fitting N1: ø1/8" One-touch fitting C4: With ø4 One-touch fitting N3: ø5/32" One-touch fitting C6: With ø6 One-touch fitting N7: ø1/4" One-touch fitting (Gaskets ⑥ and ⑦ are included.)
	For double	SV1000-50-4A-□□	
SV2000	For single	SV2000-50-3A-□□	C4: With ø4 One-touch fitting N3: ø5/32" One-touch fitting C6: With ø6 One-touch fitting N7: ø1/4" One-touch fitting C8: With ø8 One-touch fitting N9: ø5/16" One-touch fitting (Gaskets ⑥ and ⑦ are included.)
	For double	SV2000-50-4A-□□	

② **Supply/Exhaust end block assembly** **SV □ 000 − 52U − 2 A □ — □**

③ **Supply/Exhaust block assembly** **SV □ 000 − 51D □ — □ A □ — □**

Series

1	SV1000
2	SV2000

Connector entry direction (D-sub, flat types only)

1	Upward
2	Lateral

Supply/Exhaust block assembly specification

30	For EX500 (decentralized serial)
32	For circular connector
33	For D-sub connector
34	For Flat ribbon cable connector (26 pins)
35	For Flat ribbon cable connector (20 pins)
36	For Flat ribbon cable connector (10 pins)
38	For EX120 (dedicated output serial)

∗ Since EX500 and EX120 type SI units are not included, order them separately.

Pilot specification

Nil	Internal pilot specification
S	Internal pilot/Built-in silencer
R	External pilot specification
RS	External pilot/Built-in silencer

P, E port size

C8	ø8 One-touch fitting	SV1000
N9	ø5/16" One-touch fitting	
C10	ø10 One-touch fitting	SV2000
N11	ø3/8" One-touch fitting	
00	Plug	All series

∗ "00" (plug) is not available for S, R and RS types.

No.	Description	Part no. SV1000	Part no. SV2000	Note
④	**Series EX500 SI unit**	Refer to page 14.		
⑤	**Series EX120 SI unit**	Refer to page 32.		
⑥	**Gasket**	SX3000-57-4	SX5000-57-6	
⑦	**Connector gasket**	SX3000-146-2		
⑧	**DIN rail**	VZ1000-11-1-□		Refer to the DIN rail dimension tables on page 85.
⑨	**Round head combination screw**	SX3000-22-2 (M2 x 24)	SV2000-21-1 (M3 x 30)	

Type 16: Cassette Base Manifold Replacement Parts

Adding manifold bases (type 16)

1 Loosen the screws ⓐ (2 pcs. on one side) that hold the manifold base onto the DIN rail.
(When removing the manifold base from the DIN rail, loosen the holding screws at four locations.)

2 Using a flat head screw driver, etc., pull the lever ⓑ forward on the manifold block assembly where a station is to be added, and disconnect the manifold block assemblies.

3 Attach the manifold block assembly to be added to the DIN rail as shown in the figure.

4 Connect the block assemblies by pressing them together, and push the lever in firmly until it stops. Then secure them to the DIN rail by tightening the screws ⓐ.

⚠**Caution** (Tightening torque: 1.4N·m)

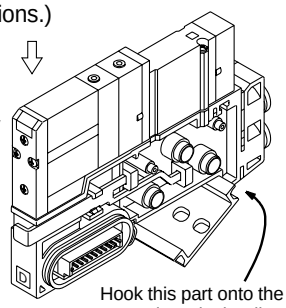

Figure. Block mounting

⚠Caution

Fitting assembly replacement

By replacing manifold fitting assemblies, it is possible to change the size of the A, B ports and P, E ports. To replace them, remove the clip with a flat head screw driver, etc., and pull out the fitting assembly. Mount the new fitting assembly by inserting it and then replacing the clip to its fully inserted position.

Fitting assembly part numbers

Port size		SV1000	SV2000
A, B port	ø3.2 One-touch fitting	VVQ1000-50A-C3	—
	ø4 One-touch fitting	VVQ1000-50A-C4	VVQ1000-51A-C4
	ø6 One-touch fitting	VVQ1000-50A-C6	VVQ1000-51A-C6
	ø8 One-touch fitting	—	VVQ1000-51A-C8
	N1 One-touch fitting	VVQ1000-50A-N1	—
	N3 One-touch fitting	VVQ1000-50A-N3	VVQ1000-51A-N3
	N7 One-touch fitting	VVQ1000-50A-N7	VVQ1000-51A-N7
	N9 One-touch fitting	—	VVQ1000-51A-N9
P, E port	ø8 One-touch fitting	VVQ1000-51A-C8	—
	ø10 One-touch fitting	—	VVQ2000-51A-C10
	N9 One-touch fitting	VVQ1000-51A-N9	—
	N11 One-touch fitting	—	VVQ2000-51A-N11

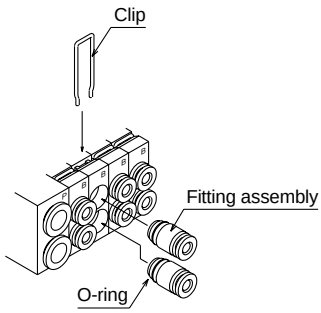

Note 1) Be careful to avoid damage or contamination of O-rings, as this can cause air leakage.

Note 2) When removing a fitting assembly from a valve, after removing the clip, attach tubing or a plug (KQP-□□) to the One-touch fitting, and pull it out while holding the tubing (or plug). If it is pulled out while holding the release button of the fitting assembly (resin part), the release button may be damaged.

Note 3) Be sure to shut off the power and air supplies before disassembly. Furthermore, since air may remain inside the actuator, piping and manifold, confirm that the air is completely exhausted before performing any work.

How to order cassette base type 16 solenoid valves with manifold block

[Series SV1000/SV2000]
• Type with manifold block is used when adding stations, etc.

SV 1 1 0 0 □ □ – 5 F □ □ – □ □ – □

Series

1	SV1000
2	SV2000

Type of actuation

1	2 position single solenoid
2	2 position double solenoid
3	3 position closed center
4	3 position exhaust center
5	3 position pressure center
A	4 position dual 3 port valve: N.C./N.C.
B	4 position dual 3 port valve: N.O./N.O.
C	4 position dual 3 port valve: N.C./N.O.

Pilot specification

Nil	Internal pilot
R	External pilot

∗ External pilot specification is not available for 4 position dual 3 port valves.

Back pressure check valve

Nil	None
K	Built-in

∗ Back pressure check valve is not available for 3 position closed center and 3 position pressure center.
∗ Built-in back pressure check valve type is applicable to series SV1000 only.
∗ Flow rate with the built-in back pressure check valve is reduced approximately 20%.

Rated voltage

5	24VDC
6	12VDC

∗ Note that serial wiring manifolds (EX500, EX250 and EX120) are only available with 24VDC.

Light/Surge voltage suppressor

U	With light and surge voltage suppressor
R	With surge voltage suppressor

Manual override

Nil: Non-locking push type	**D:** Slotted locking type
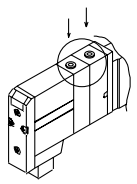	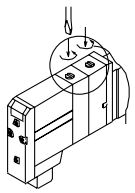

Manifold block type

C	Cassette base type 16 with manifold block

Manifold wiring specification

Nil	Double wiring
S	Single wiring

A, B port size

Refer to A, B ports size tables on pages 8, 33, 44, 54 and 65.

Example (SV1000)
SV1200-5FU-C-C6

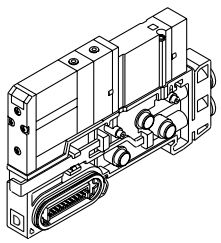

Type 10: Tie-rod Base Manifold Exploded View

Type 10C (circular connector type) manifold

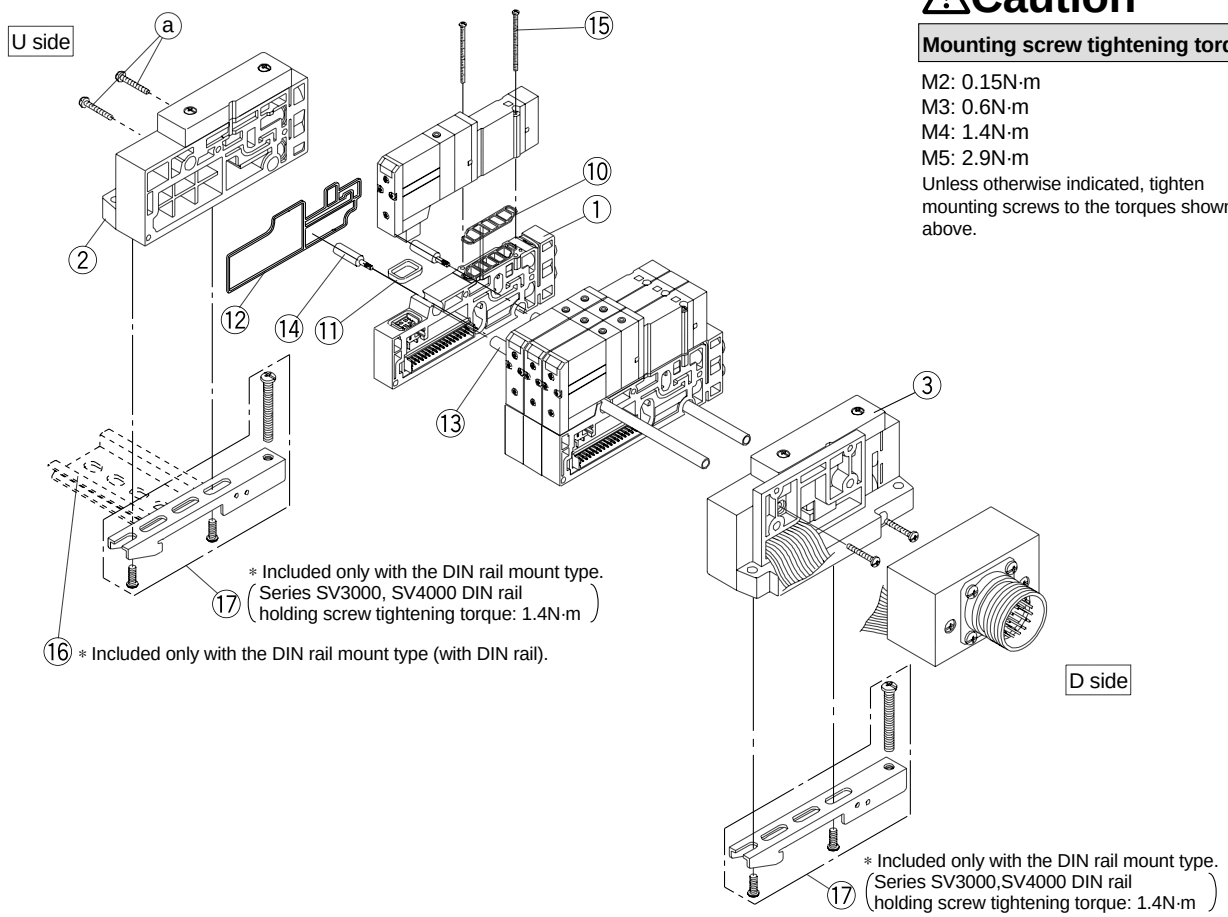

∗ Included only with the DIN rail mount type. (Series SV3000, SV4000 DIN rail holding screw tightening torque: 1.4N·m)

∗ Included only with the DIN rail mount type (with DIN rail).

∗ Included only with the DIN rail mount type. (Series SV3000,SV4000 DIN rail holding screw tightening torque: 1.4N·m)

⚠Caution

Mounting screw tightening torques

M2: 0.15N·m
M3: 0.6N·m
M4: 1.4N·m
M5: 2.9N·m

Unless otherwise indicated, tighten mounting screws to the torques shown above.

③ Supply/Exhaust block assembly

EX250 (type 10S1□W)

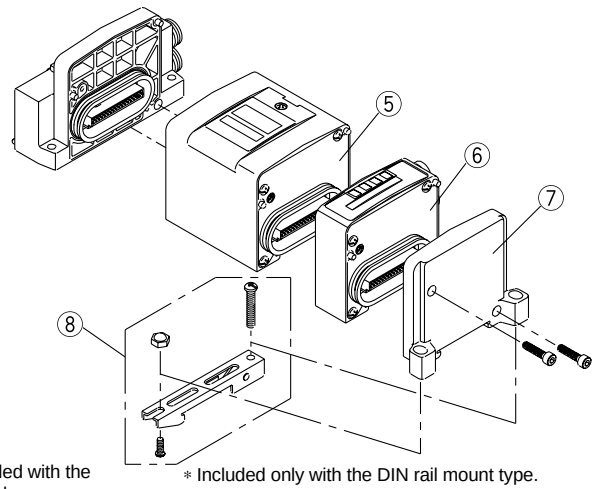

∗ ⑤, ⑥, ⑦ and ⑧ are not included with the supply/exhaust block assembly.

∗ Included only with the DIN rail mount type. (DIN rail holding screw tightening torque: 0.5N·m)

Circular connector (type 10C)

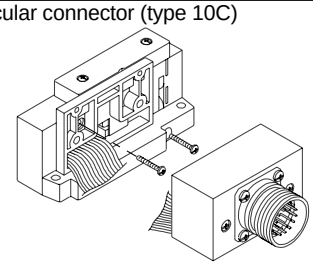

D-sub connector (type 10F)

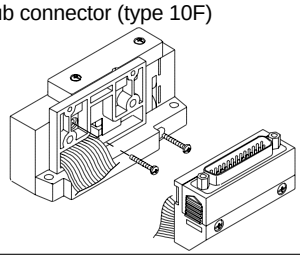

EX500 (type 10SA□W)

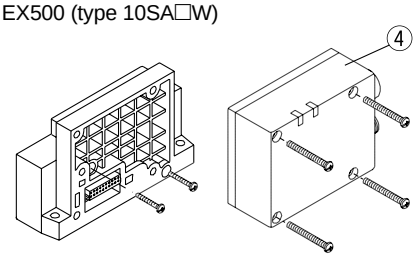

∗ ④ is not included with the supply/exhaust block assembly.

EX120 (type 10S3□)

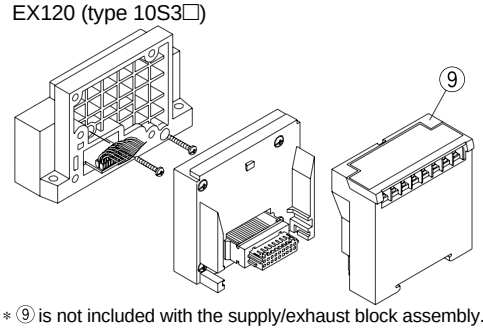

∗ ⑨ is not included with the supply/exhaust block assembly.

Flat ribbon cable connector (type 10P□)

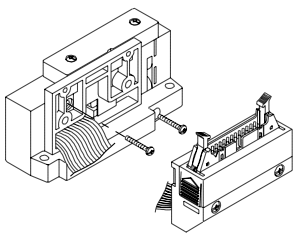

① Manifold block assembly part numbers

Series	Wiring specifications	Manifold block assembly part no.	Note
SV1000	For single	SV1000-50-1A-□□	C3: With ø3.2 One-touch fitting N1: ø1/8" One-touch fitting C4: With ø4 One-touch fitting N3: ø5/32" One-touch fitting C6: With ø6 One-touch fitting N7: ø1/4" One-touch fitting (Tie-rod for station additions ⑭ and gaskets ⑩, ⑪, and ⑫ are included.)
	For double	SV1000-50-2A-□□	
SV2000	For single	SV2000-50-1A-□□	C4: With ø4 One-touch fitting N3: ø5/32" One-touch fitting C6: With ø6 One-touch fitting N7: ø1/4" One-touch fitting C8: With ø8 One-touch fitting N9: ø5/16" One-touch fitting (Tie-rod for station additions ⑭ and gaskets ⑩, ⑪, and ⑫ are included.)
	For double	SV2000-50-2A-□□	
SV3000	For single	SV3000-50-1A-□□	C6: With ø6 One-touch fitting N7: ø1/4" One-touch fitting C8: With ø8 One-touch fitting N9: ø5/16" One-touch fitting C10: With ø10 One-touch fitting N11: ø3/8" One-touch fitting (Tie-rod for station additions ⑭ and gaskets ⑩, ⑪, and ⑫ are included.)
	For double	SV3000-50-2A-□□	
SV4000	For single	SV4000-50-1A-□□	C8: With ø8 One-touch fitting N9: ø5/16" One-touch fitting C10: With ø10 One-touch fitting N11: ø3/8" One-touch fitting C12: With ø12 One-touch fitting 02: Rc 1/4 02N: NPT 1/4 03: Rc 3/8 03N: NPT 3/8 02F: G 1/4 02T: NPTF 1/4 03F: G 3/8 03T: NPTF 3/8 (Tie-rod for station additions ⑭ and gaskets ⑩, ⑪, and ⑫ are included.)
	For double	SV4000-50-2A-□□	

② Supply/Exhaust end block assembly SV□000−52U − 1 A□—□—□

③ Supply/Exhaust block assembly SV□000−51D□—□ A□—□—□

Series

1	SV1000
2	SV2000
3	SV3000
4	SV4000

Connector entry direction (D-sub, flat types only)

1	Upward
2	Lateral

Mounting

Nil	Direct mount
D0	DIN rail mount

Supply/Exhaust block assembly specification

10	For EX500 (SI unit)
11	For EX250 (SI unit)
12	For circular connector
13	For D-sub connector
14	For Flat ribbon cable connector (26 pins)
15	For Flat ribbon cable connector (20 pins)
16	For Flat ribbon cable connector (10 pins)
18	For EX120 (SI unit)

∗ Since EX500 and EX120 type SI units are not included, order them separately.

P, E port size

C8	ø8 One-touch fitting	SV1000
N9	ø5/16" One-touch fitting	
C10	ø10 One-touch fitting	SV2000
N11	ø3/8" One-touch fitting	
C12	ø12 One-touch fitting	SV3000 SV4000
N11	ø3/8" One-touch fitting	
03	Rc 3/8	SV4000
03F	G 3/8	
03N	NPT 3/8	
03T	NPTF 3/8	
00	Plug	All series

∗ "00" (Plug) is not available for S, R and RS types.

Pilot specification

Nil	Internal pilot specification
S	Internal pilot/Built-in silencer
R	External pilot specification
RS	External pilot/Built-in silencer

No.	Description	Part no.				Note
		SV1000	SV2000	SV3000	SV4000	
④	**Series EX500 SI unit**	Refer to page 14.				
⑤	**Series EX250 SI unit**	EX250-SDN1				For DeviceNet
		EX250-SPR1				For PROFIBUS-DP
⑥	**Series EX250 input block**	EX250-IE1				M12, 2 inputs
		EX250-IE2				M12, 4 inputs
		EX250-IE3				M8, 4 inputs
⑦	**Series EX250 end plate assembly**	EX250-EA1				With mounting screws (M3 x 10, 2 pcs.)
⑧	**EX250 clamp assembly**	SV1000-78A				
⑨	**Series EX120 SI unit**	Refer to page 32.				
⑩	**Gasket**	SX3000-57-4	SX5000-57-6	SX7000-57-5	SY9000-11-2	
⑪	**Connector gasket**	SX3000-146-2	SX3000-146-2	SX3000-146-2	SX3000-146-2	
⑫	**Manifold block gasket**	SX3000-181-1	SX5000-138-1	SV3000-65-1	SV4000-65-1	
⑬	**Tie-rod**	SV1000-55-1-□□	SV2000-55-1-□□	SV3000-55-1-□□	SV4000-55-1-□□	□□: Manifold stations
⑭	**Tie-rod for station addition**	SV1000-55-2-1	SV2000-55-2A	SV3000-55-2A	SV4000-55-2A	
⑮	**Round head combination screw (Valve mounting screw)**	SX3000-22-2 (M2 x 24)	SV2000-21-1 (M3 x 30)	SV3000-21-1 (M4 x 35)	SV2000-21-2 (M3 x 40)	
⑯	**DIN rail**	VZ1000-11-1-□	VZ1000-11-1-□	VZ1000-11-4-□	VZ1000-11-4-□	Refer to DIN rail dimension tables on page 85.
⑰	**Clamp assembly**	SV1000-69A	SV1000-69A	SV3000-69A	SV3000-69A	

Note) Two pieces of ⑬ and ⑭ (tie-rod) are required for Series SV1000, and three pieces are required for Series SV2000, 3000 and 4000.
Two pieces of ⑮ (valve mounting screw) are required for Series SV1000, 2000 and 3000, and three pieces are required for Series SV4000.

Type 10: Tie-rod Base Manifold Replacement Parts

Adding manifold bases (type 10)

1 Loosen the U side screws ⓐ, and remove the supply/exhaust end block assembly ②.

2 Screw in the tie-rods for station addition.
(Screw them in until there is no gap between the tie-rods.)

3 Connect the manifold assembly and supply/exhaust end block assembly to be added, and tighten the screws ⓐ.

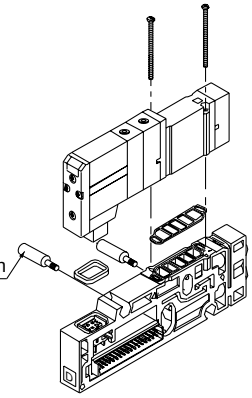

⚠**Caution** Tightening torques

SV1000, SV2000	0.6N·m
SV3000	1.4N·m
SV4000	2.9N·m

Note) When eliminating manifold stations, the appropriate tie-rods ⑬ for the desired change should be ordered separately.
(When equipped with a DIN rail, be sure to tighten the DIN rail holding screws after tightening the tension bolts.)

⚠Caution

Fitting assembly replacement

By replacing manifold fitting assemblies, it is possible to change the size of the A, B ports and P, E ports. To replace them, remove the clip with a flat head screw driver, etc., and pull out the fitting assembly. Mount the new fitting assembly by inserting it and then replacing the clip to its fully inserted position.

Fitting assembly part numbers

Port size		SV1000	SV2000	SV3000	SV4000
A, B port	ø3.2 One-touch fitting	VVQ1000-50A-C3	—	—	—
	ø4 One-touch fitting	VVQ1000-50A-C4	VVQ1000-51A-C4	—	—
	ø6 One-touch fitting	VVQ1000-50A-C6	VVQ1000-51A-C6	VVQ2000-51A-C6	—
	ø8 One-touch fitting	—	VVQ1000-51A-C8	VVQ2000-51A-C8	VVQ4000-50B-C8
	ø10 One-touch fitting	—	—	VVQ2000-51A-C10	VVQ4000-50B-C10
	ø12 One-touch fitting	—	—	—	VVQ4000-50B-C12
	N1 One-touch fitting	VVQ1000-50A-N1	—	—	—
	N3 One-touch fitting	VVQ1000-50A-N3	VVQ1000-51A-N3	—	—
	N7 One-touch fitting	VVQ1000-50A-N7	VVQ1000-51A-N7	VVQ2000-51A-N7	—
	N9 One-touch fitting	—	VVQ1000-51A-N9	VVQ2000-51A-N9	VVQ4000-50B-N9
	N11 One-touch fitting	—	—	VVQ2000-51A-N11	VVQ4000-50B-N11
	1/4 threaded type port block assembly	—	—	—	SY9000-58A-02□
	3/8 threaded type port block assembly	—	—	—	SY9000-58A-03□
P, E port	ø8 One-touch fitting	VVQ1000-51A-C8	—	—	—
	ø10 One-touch fitting	—	VVQ2000-51A-C10	—	—
	ø12 One-touch fitting	—	—	VVQ4000-50B-C12	VVQ4000-50B-C12
	N9 One-touch fitting	VVQ1000-51A-N9	—	—	—
	N11 One-touch fitting	—	VVQ2000-51A-N11	VVQ4000-50B-N11	VVQ4000-50B-N11
	3/8 threaded type port block assembly	—	—	—	SY9000-58B-03□

1/4, 3/8 threaded type port block assembly part numbers

For A, B port

SY9000 – 58A – 02/03 □

For P, E port

SY9000 – 58B – 03 □

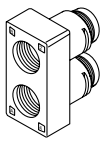

Thread type

Nil	Rc
F	G
N	NPT
T	NPTF

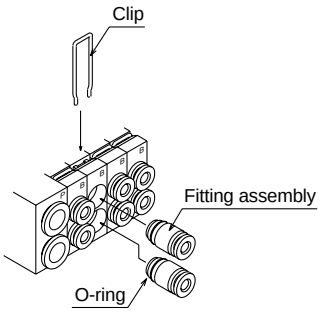

Note 1) Be careful to avoid damage or contamination of O-rings, as this can cause air leakage.

Note 2) When removing a fitting assembly from a valve, after removing the clip, attach tubing or a plug (KQP-□□) to the One-touch fitting, and pull it out while holding the tubing (or plug). If it is pulled out while holding the release button of the fitting assembly (resin part), the release button may be damaged.
However, 02 and 03 port block assemblies should be pulled out as they are.

Note 3) Be sure to shut off the power and air supplies before disassembly. Furthermore, since air may remain inside the actuator, piping and manifold, confirm that the air is completely exhausted before performing any work.

How to order tie-rod type 10 solenoid valves with manifold block

[Series SV1000 to SV4000]

• Type with manifold block is used when adding stations, etc.

SV 1 1 0 0 □ □ – 5 F □ □ – □ □ – □

Series

1	SV1000
2	SV2000
3	SV3000
4	SV4000

Type of actuation

1	2 position single solenoid
2	2 position double solenoid
3	3 position closed center
4	3 position exhaust center
5	3 position pressure center
A	4 position dual 3 port valve: N.C./N.C.
B	4 position dual 3 port valve: N.O./N.O.
C	4 position dual 3 port valve: N.C./N.O.

∗ 4 position dual 3 port valves are applicable to series SV1000 and SV2000 only.

Pilot specification

Nil	Internal pilot
R	External pilot

∗ External pilot specification is not available for 4 position dual 3 port valves.

Back pressure check valve

Nil	None
K	Built-in

∗ Back pressure check valve is not available for 3 position closed center and 3 position pressure center.

∗ Built-in back pressure check valve type is applicable to series SV1000 only.

∗ Flow rate with the built-in back pressure check valve is reduced approximately 20%.

Rated voltage

5	24VDC
6	12VDC

∗ Note that serial wiring manifolds (EX500, EX250 and EX120) are only available with 24VDC.

Light/Surge voltage suppressor

U	With light and surge voltage suppressor
R	With surge voltage suppressor

Manual override

Nil: Non-locking push type	**D:** Slotted locking type
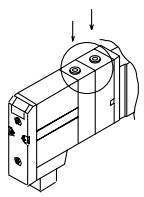	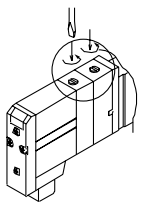

Manifold block type

T	Tie-rod type 10 with manifold block

Note) Tie-rod type 10 includes tie-rods for station additions.

Manifold wiring specification

Nil	Double wiring
S	Single wiring

A, B port size

Refer to A, B port size table on pages 8, 24, 33, 44, 54 and 65.

Example (SV1000)
SV1200-5FU-T-C6

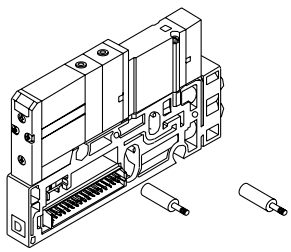

Manifold Options (Common for types 16 and 10)

■ Relay output module

By adding a relay output module to a series SV manifold, devices up to 110VAC, 3A (large type solenoid valves, etc.) can be controlled together with series SV valves.

How to Order

SV □ 000 – 60 – 5 A – 1A

Series

1	SV1000
2	SV2000
3	SV3000

Number of outputs

A	1 output
B	2 outputs

Rated voltage

5	24VDC
6	12VDC

∗ Note that serial wiring manifolds (EX500, EX250 and EX120) are available with 24VDC only.

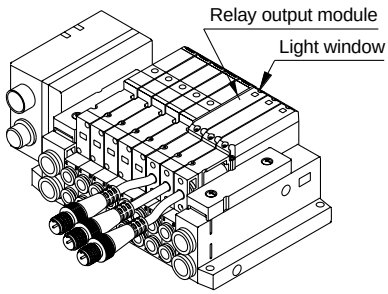

Relay output module specifications

Item	Specification			
Number of outputs	1 output [connector with lead wire (M12)]		2 outputs [connector with lead wire (M12)]	
Output type	4 pin connector (M12) plug ① — ② Output A ③ — ④ Output A 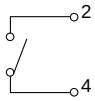 Contact type ("a" contact) 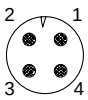 Relay output module side pin arrangement		4 pin connector (M12) plug ① Output B ② Output A ③ Output B ④ Output A 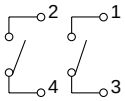 Contact type ("a" contact)  Relay output module side pin arrangement	
Load voltage	110VAC	30VDC	110VAC	30VDC
Load current	3A	3A	0.3A	1A
Indicator light	Orange		A side: Orange B side: Green	
Current consumption	20mA or less			
Polarity	Non-polar			
Weight g	48			

■ Y type connector

Used to branch a two output relay output module to two separate systems.

How to Order

EX500 – ACY00 – S

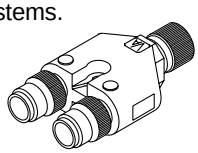

Relay output module and Y type connector wiring example

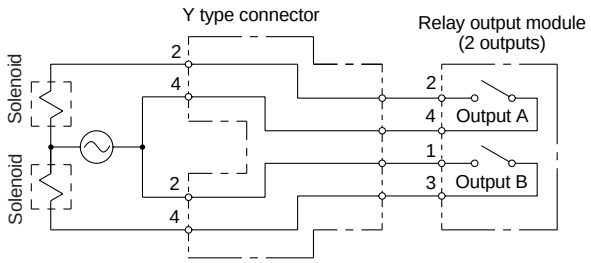

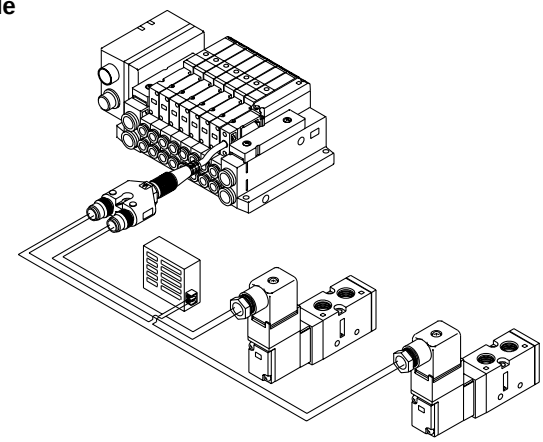

Manifold Options

■ Blanking plate assembly

Used in situations where valves will be added in the future, and for maintenance, etc.

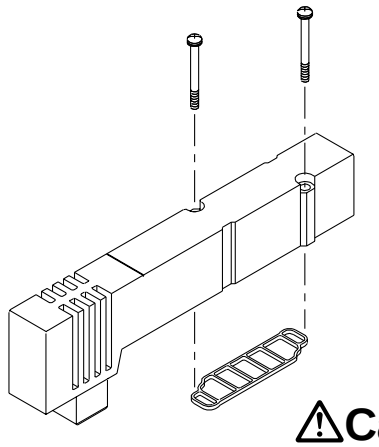

Series	Blanking plate assembly part no.
SV1000	SV1000-67-1A
SV2000	SV2000-67-1A
SV3000	SV3000-67-1A
SV4000	SV4000-67-1A

⚠Caution

Mounting screw tightening torques
M2: 0.15N·m
M3: 0.6N·m
M4: 1.4N·m

■ SUP/EXH block disks

[SUP block disk]
By placing a SUP block disk in a manifold valve's pressure supply passage, two different high and low pressures can be supplied to one manifold.

[EXH block disk]
By placing an EXH block disk in a manifold valve's exhaust passage, the valve's exhaust can be separated so that it will not affect other valves.
It can also be used on a manifold with mixed positive pressure and vacuum. (Two pieces are required to block EXH on both sides. However, series SV1000 and 2000 type 10 manifolds require only one piece.)

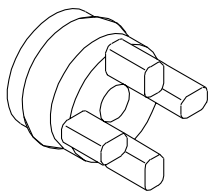

Cassette base type 16

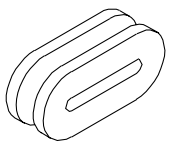

Tie-rod base type 10

Series	Manifold type	SUP block disk	EXH block disk
SV1000	10	SV1000-59-1A	SV1000-59-2A
	16	SX3000-77-1A	SX3000-77-1A
SV2000	10	SV2000-59-1A	SV2000-59-2A
	16	SV2000-59-3A	SV2000-59-3A
SV3000	10	SV3000-59-1A	SV3000-59-1A
SV4000	10	SY9000-61-2A	SY9000-61-2A

■ Block disk labels

These labels are attached to manifolds in which SUP and EXH block disks have been installed, in order to identify the installed locations. (Three sheets each included.)
∗ When manifolds are ordered with block disks installed, the labels will be attached where the block disks are installed.

SV1000 – 74 – 1A

SUP block disk label	EXH block disk label	SUP, EXH block disk label
P P E	P E E	P P E E

∗ When ordering a manifold and block disks together using a manifold specification sheet, etc., labels will be attached where block disks are installed prior to shipment from the factory.

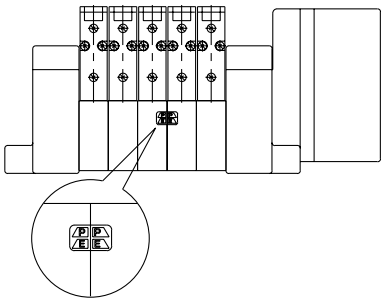

■ Silencer with One-touch fitting

This silencer can be quickly mounted on the manifold's E (exhaust) port.

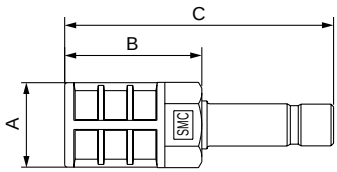

Series	Model	Effective area	A	B	C
SV1000 (for ø8)	AN203-KM8	14mm²	ø16	26	51
SV2000 (for ø10)	AN200-KM10	26mm²	ø22	53.8	80.8
	AN300-KM10	30mm²	ø25	70	97
SV3000 SV4000 (for ø12)	AN300-KM12	41mm²	ø25	70	98

■ Plug (white)

These are inserted in unused cylinder ports and P, E ports.

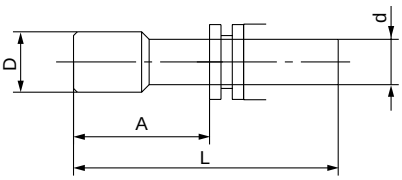

Applicable fitting size d	Model	A	L	D
ø4	KQ2P-04	16	32	ø6
ø6	KQ2P-06	18	35	ø8
ø8	KQ2P-08	20.5	39	ø10
ø10	KQ2P-10	22	43	ø12
ø12	KQ2P-12	24	44.5	ø14
ø1/8"	KQ2P-01	16	31.5	ø5
ø5/32"	KQ2P-03	16	32	ø6
ø1/4"	KQ2P-07	18	35	ø8.5
ø5/16"	KQ2P-09	20.5	39	ø10
ø3/8"	KQ2P-11	22	43	ø11.5

Manifold Options

■ Additional Supply / Exhaust

For SV1000

SV1000 – 38 – 1A – C6

Supply / Exhaust

38	SUP
39	EXH

Port size

C3	Ø3,2 One-touch fitting
C4	Ø4 One-touch fitting
C6	Ø6 One-touch fitting
N1	Ø1/8" One-touch fitting
N3	Ø5/32" One-touch fitting
N7	Ø1/4" One-touch fitting

For SV2000, 3000, 4000

SV 2 000 – 38 – 1 F A

Series

2	SV2000
3	SV3000
4	SV4000

Supply / Exhaust

38	SUP
39	EXH

Thread type

-	Rc
F	G
N	NPT
T	NPTF

Thread port

SV2000	1/8
SV3000	1/4
SV4000	

SUP

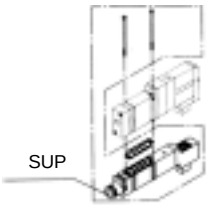

EXH

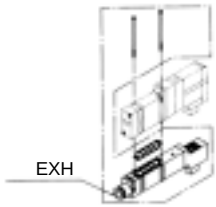

■ Circular connector cable assembly (26 pin)

GAXT100 – MC26 – □

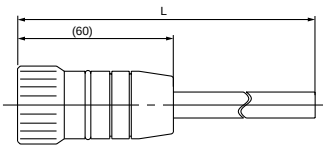

Port cable length

Part no.	L dimension
GAXT100-MC26-015	1.5m
GAXT100-MC26-030	3m
GAXT100-MC26-050	5m

Lead wire colours according to pin numbers

The colour code is according to DIN47100.

Pin no.	Cable colour	Identification
1	white	–
2	brown	–
3	green	–
4	yellow	–
5	grey	–
6	pink	–
7	blue	–
8	red	–
9	black	–
10	violet	–
11	grey	pink
12	red	blue
13	white	green
14	brown	green
15	white	yellow
16	yellow	brown
17	white	grey
18	grey	brown
19	white	pink
20	pink	brown
21	white	blue
22	brown	blue
23	white	red
24	brown	red
25	white	black
26 *	bridged to pin 25	

* only for circular connectors

Connector pin number (Arrangement as seen from the cable's port side)

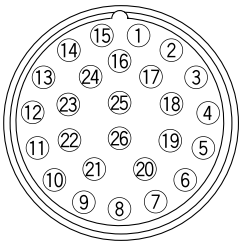

Electrical characteristics

Item	Characteristics
Conductor resistence Ω/km, 20°C	57 or less
Electric strength V, 5min, AC	1500
Insulation resistence MΩ/km	20

(See also AXT100-MC26-□ which conforms to colour code MIL-C24308)

■ D-sub connector cable assembly (25 pin)

GVVZS3000-21A-□

D sub connector / cable

Cable length (L)	Part no.	Plug type
1m	GVVZS3000-21A-160	60° outlet
3m	GVVZS3000-21A-260	60° outlet
5m	GVVZS3000-21A-360	60° outlet
8m	GVVZS3000-21A-460	60° outlet
3m	GVVZS3000-21A-2	Standard
5m	GVVZS3000-21A-3	Standard
8m	GVVZS3000-21A-4	Standard

Shielded cable

Cable length (L)	Part no.	Cable type
1m	GVVZS3000-21A-1S	shielded
3m	GVVZS3000-21A-2S	shielded
5m	GVVZS3000-21A-3S	shielded
8m	GVVZS3000-21A-4S	shielded
20m	GVVZS3000-21A-5S	on demand

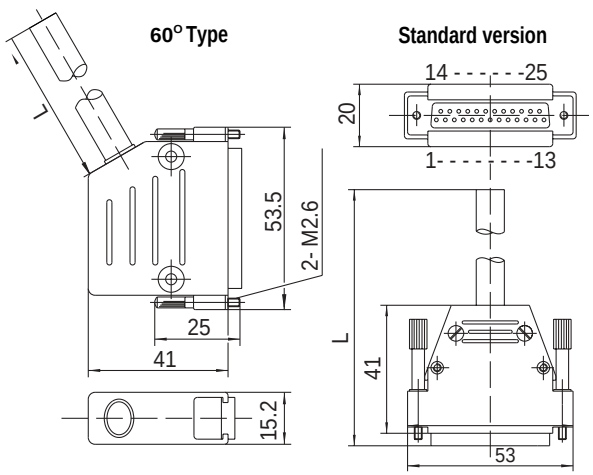

Standard version

(See also VVZS3000-21A-□ which conforms to colour code MIL-C24308)

Manifold Options

■ Flat ribbon cable/Cable assembly

AXT100 – FC□ – □

Cable Length (L)	10 pins	20 pins	26 pins
1.5m	AXT100-FC10-1	AXT100-FC20-1	AXT100-FC26-1
3m	AXT100-FC10-2	AXT100-FC20-2	AXT100-FC26-2
5m	AXT100-FC10-3	AXT100-FC20-3	AXT100-FC26-3
Connector width (W)	17.2	30	37.5

∗ When a commercially available connector is required, use a strain relief type conforming to MIL-C-83503.

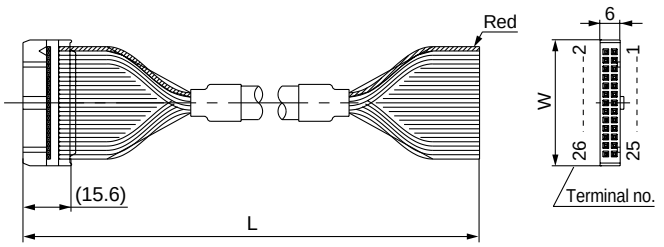

Connector manufacturers
- HIROSE ELECTRIC CO., LTD.
- Sumitomo/3-M Limited
- Japan Aviation Electronics Industry, Ltd.
- Fujitsu, Ltd.
- J.S.T. Mfg. Co., Ltd.

■ SV1000, 2000 and series EX500 input unit DIN rail dimensions and weights

VZ1000 – 11 – 1 – □

∗ Enter a number into the □ from the DIN rail dimension table below.

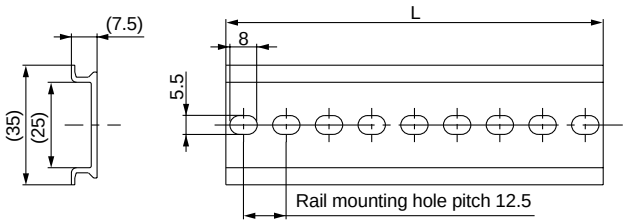

No.	0	1	2	3	4	5	6	7	8	9	10	11	12	13	14	15	16	17	18	19	20
L dimension	98	110.5	123	135.5	148	160.5	173	185.5	198	210.5	223	235.5	248	260.5	273	285.5	298	310.5	323	335.5	348
Weight (g)	17.6	19.9	22.1	24.4	26.6	28.9	31.1	33.4	35.6	37.9	40.1	42.4	44.6	46.9	49.1	51.4	53.6	55.9	58.1	60.4	62.5

No.	21	22	23	24	25	26	27	28	29	30	31	32	33	34	35	36	37	38	39	40	41
L dimension	360.5	373	385.5	398	410.5	423	435.5	448	460.5	473	485.5	498	510.5	523	535.5	548	560.5	573	585.5	598	610.5
Weight (g)	64.9	67.1	69.4	71.6	73.9	76.1	78.4	80.6	82.9	85.1	87.4	89.6	91.9	94.1	96.4	98.6	100.9	103.1	105.4	107.6	109.9

No.	42	43	44	45	46	47	48	49	50	51	52	53	54	55	56	57	58	59	60	61	62
L dimension	623	635.5	648	660.5	673	685.5	698	710.5	723	735.5	748	760.5	773	785.5	798	810.5	823	835.5	848	860.5	873
Weight (g)	112.1	114.4	116.6	118.9	121.1	123.4	125.6	127.9	130.1	132.4	134.6	136.9	139.1	141.4	143.6	145.9	148.1	150.4	152.6	154.9	157.1

No.	63	64	65	66	67	68	69	70	71
L dimension	885.5	898	910.5	923	935.5	948	960.5	973	985.5
Weight (g)	159.4	161.6	163.9	166.1	168.4	170.6	172.9	175.1	177.4

■ SV3000 and 4000 DIN rail dimensions and weights

VZ1000 – 11 – 4 – □

∗ Enter a number into the □ from the DIN rail dimension table below.

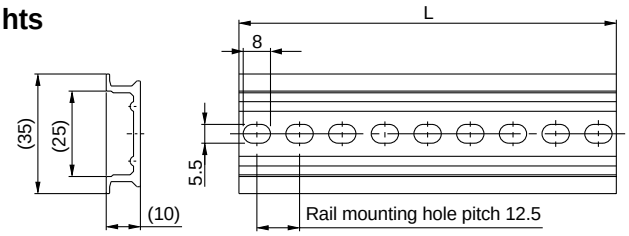

No.	0	1	2	3	4	5	6	7	8	9	10	11	12	13	14	15	16	17	18	19	20
L dimension	98	110.5	123	135.5	148	160.5	173	185.5	198	210.5	223	233.5	248	260.5	273	285.5	298	310.5	323	335.5	348
Weight (g)	24.8	28	31.1	34.3	37.4	40.6	43.8	46.9	50.1	53.3	56.4	59.6	62.7	65.9	69.1	72.2	75.4	78.6	81.7	84.9	88

No.	21	22	23	24	25	26	27	28	29	30	31	32	33	34	35	36	37	38	39	40	41
L dimension	360.5	373	385.5	398	410.5	423	435.5	448	460.5	473	485.5	498	510.5	523	535.5	548	560.5	573	585.5	598	610.5
Weight (g)	91.2	94.4	97.5	100.7	103.9	107	110.2	113.3	116.5	119.7	122.8	126	129.2	132.3	135.5	138.6	141.8	145	148.1	151.3	154.5

No.	42	43	44	45	46	47	48	49	50	51	52	53	54	55	56	57	58	59	60	61	62
L dimension	623	635.5	648	660.5	673	685.5	698	710.5	723	735.5	748	760.5	773	785.5	798	810.5	823	835.5	848	860.5	873
Weight (g)	157.6	160.8	163.9	167.1	170.3	173.4	176.6	179.8	182.9	186.1	189.2	192.4	195.6	198.7	201.9	205.1	208.2	211.4	214.5	217.7	220.9

No.	63	64	65	66	67	68	69	70	71
L dimension	885.5	898	910.5	923	935.5	948	960.5	973	985.5
Weight (g)	224	227.2	230.4	233.5	236.7	239.8	243	246.2	249.3

SV1000/2000/3000/4000
Single Valve/Sub-plate Type [IP67 Protection]

How to Order

SV 1 1 00 □ — 5 W1 U D — □ □

Series

1	SV1000
2	SV2000
3	SV3000
4	SV4000

Type of actuation

1	2 position single solenoid 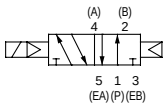
2	2 position double solenoid 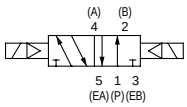
3	3 position closed center 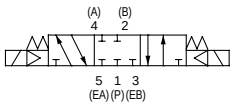
4	3 position exhaust center 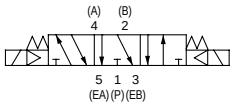
5	3 position pressure center 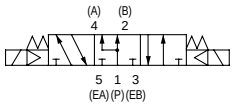
A	4 position dual 3 port valve: N.C./N.C. 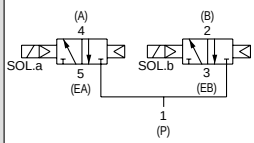
B	4 position dual 3 port valve: N.O./N.O. 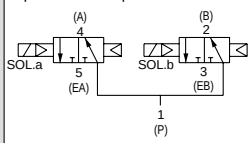
C	4 position dual 3 port valve: N.C./N.O. 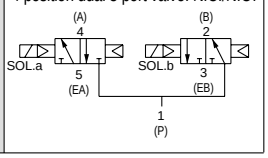

SV3000 and 4000 are not available with dual 3 port valve.

Pilot specification

Nil	Internal pilot
R	External pilot

∗ External pilot specification is not available for 4 position dual 3 port valves.

Rated voltage

5	24VDC
6	12VDC

M12 waterproof connector

Symbol	Cable length (mm)
W1	300
W2	500
W3	1000
W4	2000
W7	5000

Light/Surge voltage suppressor

U	With light and surge voltage suppressor
R	With surge voltage suppressor

Manual override

Nil	Non-locking push type
D	Slotted locking type

Port size

Symbol	Port size	Applicable series
Nil	Without sub-plate	
01	1/8	SV1000
02	1/4	SV2000 SV3000
03	3/8	SV3000 SV4000
04	1/2	SV4000

Thread type

Nil	Rc
F	G
N	NPT
T	NPTF

Series SV Solenoid Valve Specifications

Fluid		Air
Internal pilot operating pressure range MPa	2 position single 4 position dual 3 port valve	0.15 to 0.7
	2 position double	0.1 to 0.7
	3 position	0.2 to 0.7
External pilot operating pressure range MPa	Operating pressure range	–100kPa to 0.7
	2 position single, double 3 position	0.25 to 0.7
Ambient and fluid temperature °C		–10 to 50 (with no freezing)*
Maximum operating frequency Hz	2 position single, double 4 position dual 3 port valve	5
	3 position	3
Manual override		Non-locking push type
		Slotted locking type
Pilot exhaust method	Internal pilot	Main valve/Pilot valve common exhaust
	External pilot	Pilot valve individual exhaust
Lubrication		Not required
Mounting orientation		Unrestricted
Impact/Vibration resistance ms²		150/30 (8.3 to 2000Hz)
Enclosure		IP67 (based on IEC529)
Electrical entry		M12 waterproof connector
Rated coil voltage		24VDC, 12VDC
Allowable voltage fluctuation		±10% of rated voltage
Power consumption W		0.6 (With light: 0.65)
Surge voltage suppressor		Zener diode
Indicator light		LED

Note) Impact resistance: No malfunction when tested with a drop tester in the axial direction and at a right angle to the main valve and armature, one time each in energized and de-energized states (at initial value).

Vibration resistance: No malfunction when tested with one sweep of 8.3 to 2000Hz in the axial direction and at a right angle to the main valve and armature, in both energized and de-energized states (at initial value).

* Refer to page 102.

Response time

Type of actuation	Response time ms (at 0.5MPa)			
	SV1000	**SV2000**	**SV3000**	**SV4000**
2 position single	11 or less	25 or less	28 or less	40 or less
2 position double	10 or less	17 or less	26 or less	40 or less
3 position	18 or less	29 or less	32 or less	82 or less
4 position dual 3 port valve	15 or less	33 or less	—	—

Note) Based on JISB8375-1981 dynamic performance test (with coil temperature of 20°C, at rated voltage).

M12 waterproof connector wiring specifications

Single solenoid

4 pin connector (M12) plug

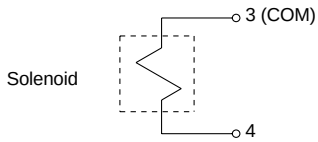

Circuit diagram

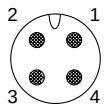

Solenoid valve side pin wiring diagram

Double solenoid

4 pin connector (M12) plug

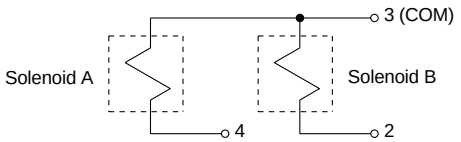

Circuit diagram

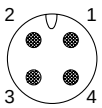

Solenoid valve side pin wiring diagram

Note) Solenoid valves do not have polarity.

Model

Series SV1000

Note) Values inside [ ] are applicable normal position. Values inside ( ) are applicable without sub-plate.

Valve Model	Type of Actuation		Port size	Flow characteristics		Weight (g) Note)
				1→4, 2 (P→A, B)	4, 2→5, 3 (A, B→EA, EB)	M12 waterproof connector (cable length 300mm)
				Nℓ/min	Nℓ/min	
SV1□00-□-01	2 position	Single	Rc 1/8	236	255	123 (88)
		Double				128 (93)
	3 position	Closed centre		177	187	130 (95)
		Exhaust centre		177	236 [157]	
		Pressure centre		285 [137]	236	
	4 position dual	N.C./N.C.		177	285	128 (93)
		N.O./N.O.		226	206	

Series SV2000

Valve Model	Type of Actuation		Port size	Flow characteristics		Weight (g) Note)
				1→4, 2 (P→A, B)	4, 2→5, 3 (A, B→EA, EB)	M12 waterproof connector (cable length 300mm)
				Nℓ/min	Nℓ/min	
SV2□00-□-02	2 position	Single	Rc 1/4	628	648	159 (96)
		Double				163 (100)
	3 position	Closed centre		491	461	168 (105)
		Exhaust centre		432	707 [363]	
		Pressure centre		834 [275]	471	
	4 position dual	N.C./N.C.		540	589	163 (100)
		N.O./N.O.		560	530	

Series SV3000

Valve Model	Type of Actuation		Port size	Flow characteristics		Weight (g) Note)
				1→4, 2 (P→A, B)	4, 2→5, 3 (A, B→EA, EB)	M12 waterproof connector (cable length 300mm)
				Nℓ/min	Nℓ/min	
SV3□00-□-02	2 position	Single	Rc 1/4	1079	981	250 (121)
		Double				253 (124)
	3 position	Closed centre		785	707	261 (132)
		Exhaust centre		697	1080 [481]	
		Pressure centre		1276 [638]	618	
SV3□00-□-03	2 position	Single	Rc 3/8	1178	1080	235
		Double				238
	3 position	Closed centre		785	717	246
		Exhaust centre		697	1080 [334]	
		Pressure centre		1276 [628]	647	

Series SV4000

Valve Model	Type of Actuation		Port size	Flow characteristics		Weight (g) Note)
				1→4, 2 (P→A, B)	4, 2→5, 3 (A, B→EA, EB)	M12 waterproof connector (cable length 300mm)
				Nℓ/min	Nℓ/min	
SV4□00-□-03	2 position	Single	Rc 3/8	1962	2453	505 (208)
		Double				509 (212)
	3 position	Closed centre		1767	1669	530 (233)
		Exhaust centre		1669	2748 [932]	
		Pressure centre		2748 [825]	1865	
SV4□00-□-04	2 position	Single	Rc 1/2	2158	2453	484
		Double				488
	3 position	Closed centre		1767	1767	509
		Exhaust centre		1963	3533 [2356]	
		Pressure centre		3239 [923]	1865	

Construction: SV1000/2000/3000/4000 Single Valve/Sub-plate Type

2 position single

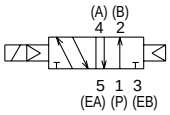

2 position single

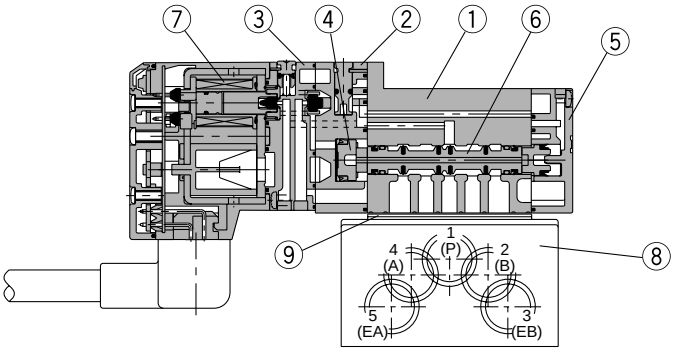

2 position double

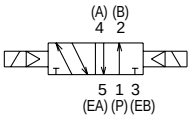

2 position double

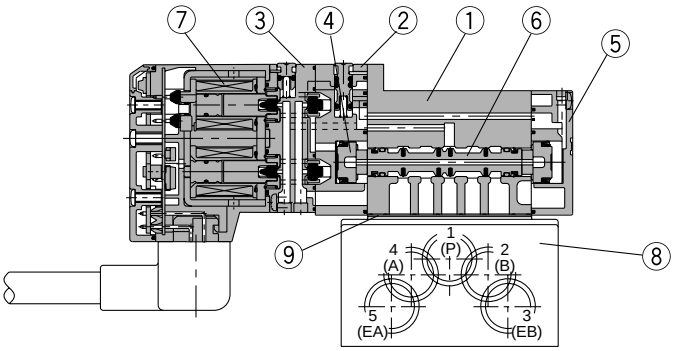

3 position closed centre

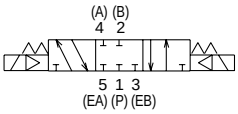

3 position exhaust centre

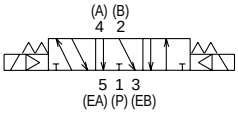

3 position pressure centre

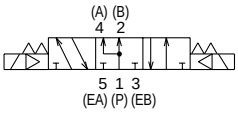

3 position closed centre/exhaust centre/pressure centre

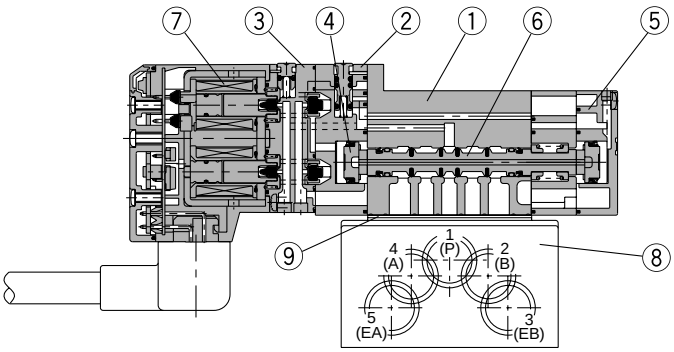

Parts list

No.	Description	Material	Note
1	**Body**	Die-cast aluminum (SV1000 is die-cast zinc)	White
2	**Adapter plate**	Resin	White
3	**Pilot body**	Resin	White
4	**Piston**	Resin	—
5	**End plate**	Resin	White
6	**Spool valve assembly**	Aluminum/H-NBR	—
7	**Molded coil**	Resin	Gray

⚠Caution

Mounting screw tightening torques

M2: 0.15N·m
M3: 0.6N·m
M4: 1.4N·m

Replacement parts

No.	Description	Part number				Note
		SV1□00	SV2□00	SV3□00	SV4□00	
8	**Sub-plate**	SY3000-27-1□-Q	SY5000-27-1□-Q	1/4: SY7000-27-1□-Q 3/8: SY7000-27-2□-Q	3/8: SY9000-27-1□ 1/2: SY9000-27-2□	Die-cast aluminium See thread types on page 86 for □.
9	**Gasket**	SY3000-11-25	SY5000-11-18	SY7000-11-14	SY9000-11-2	
—	**Round head combination screw**	SX3000-22-2 (M2 x 24)	SV2000-21-1 (M3 x 30)	SV3000-21-1 (M4 x 35)	SV2000-21-2 (M3 x 40)	For valve mounting (flat nickel plated)

Dimensions: Series SV1000

2 position single/double/4 position dual 3 port [M12 waterproof connector type]
SV1□00(R)-□W□□-01

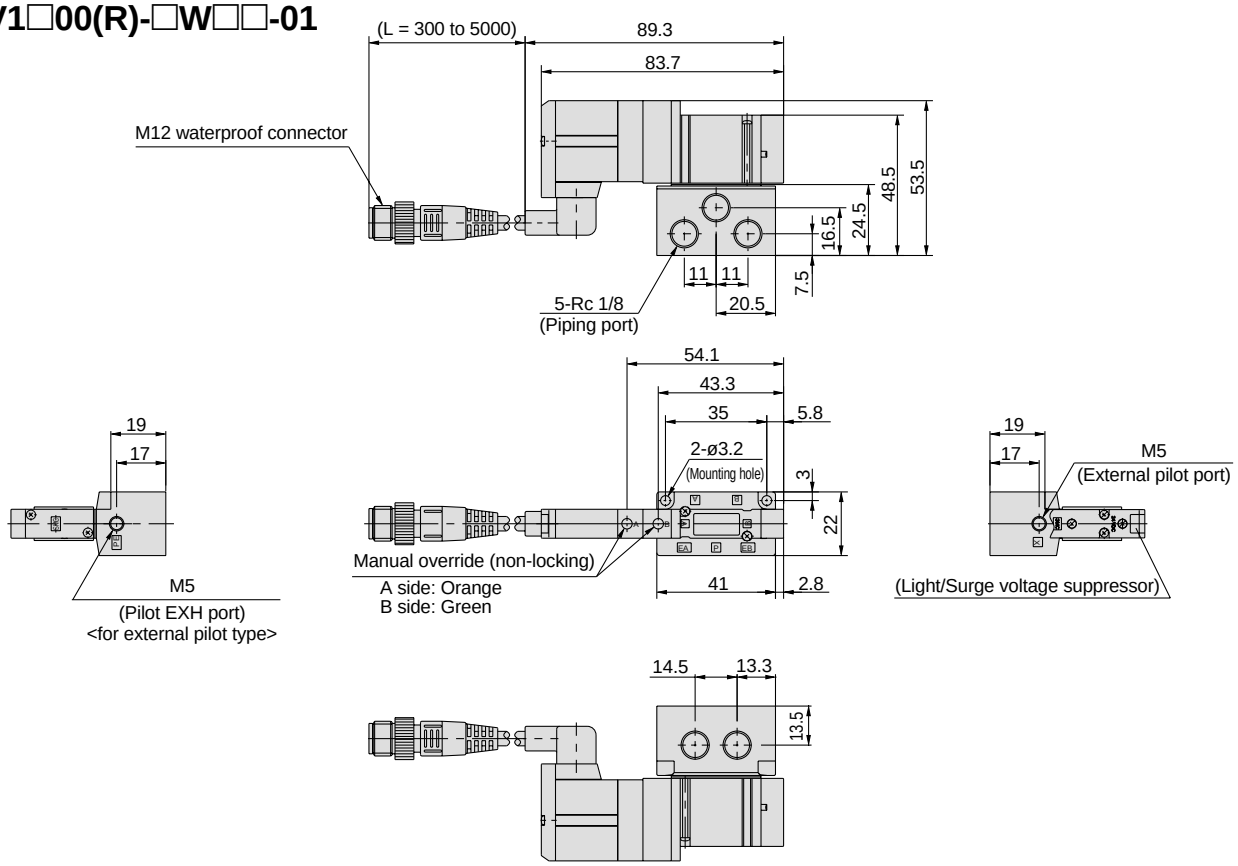

3 position closed centre/exhaust centre/pressure centre [M12 waterproof connector type]
SV1□00(R)-□W□□-01

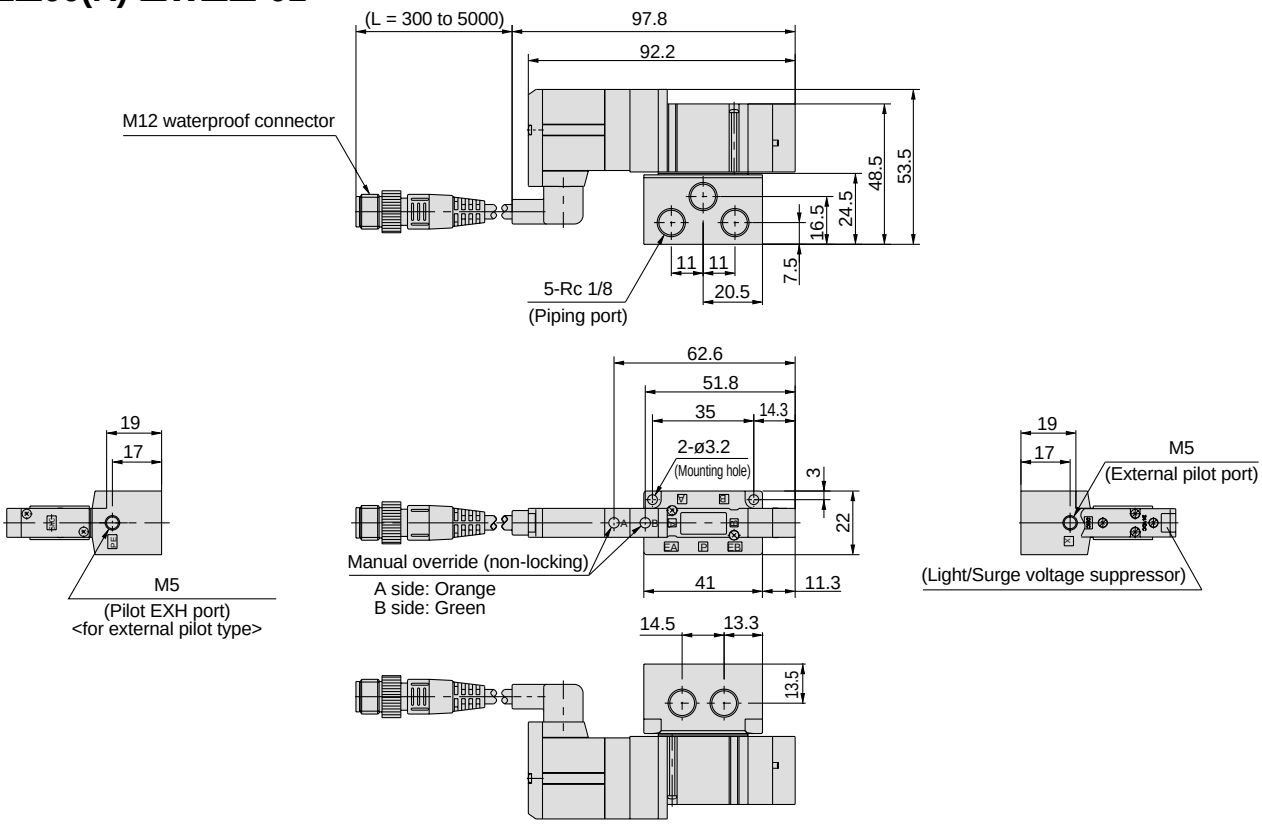

Dimensions: Series SV2000

2 position single/double/4 position dual 3 port [M12 waterproof connector type]
SV2□00(R)-□W□□-02

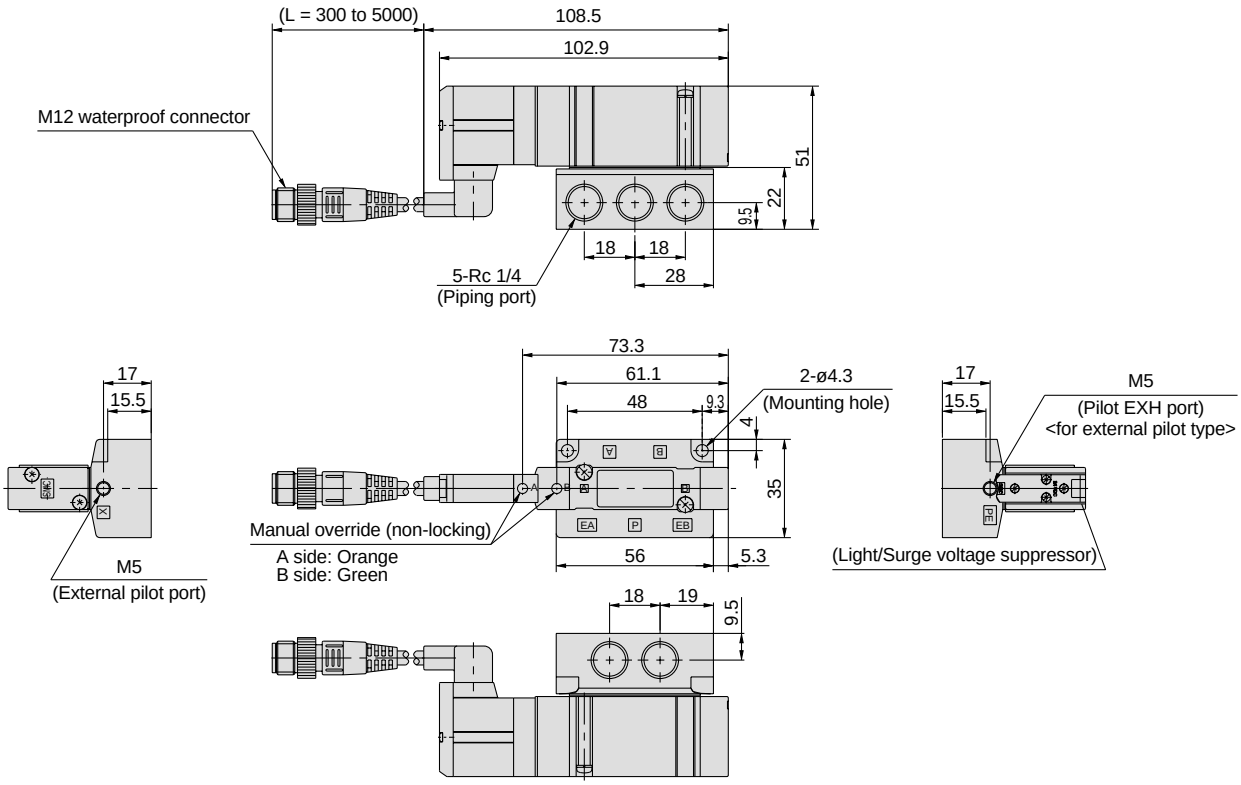

3 position closed centre/exhaust centre/pressure centre [M12 waterproof connector type]
SV2□00(R)-□W□□-02

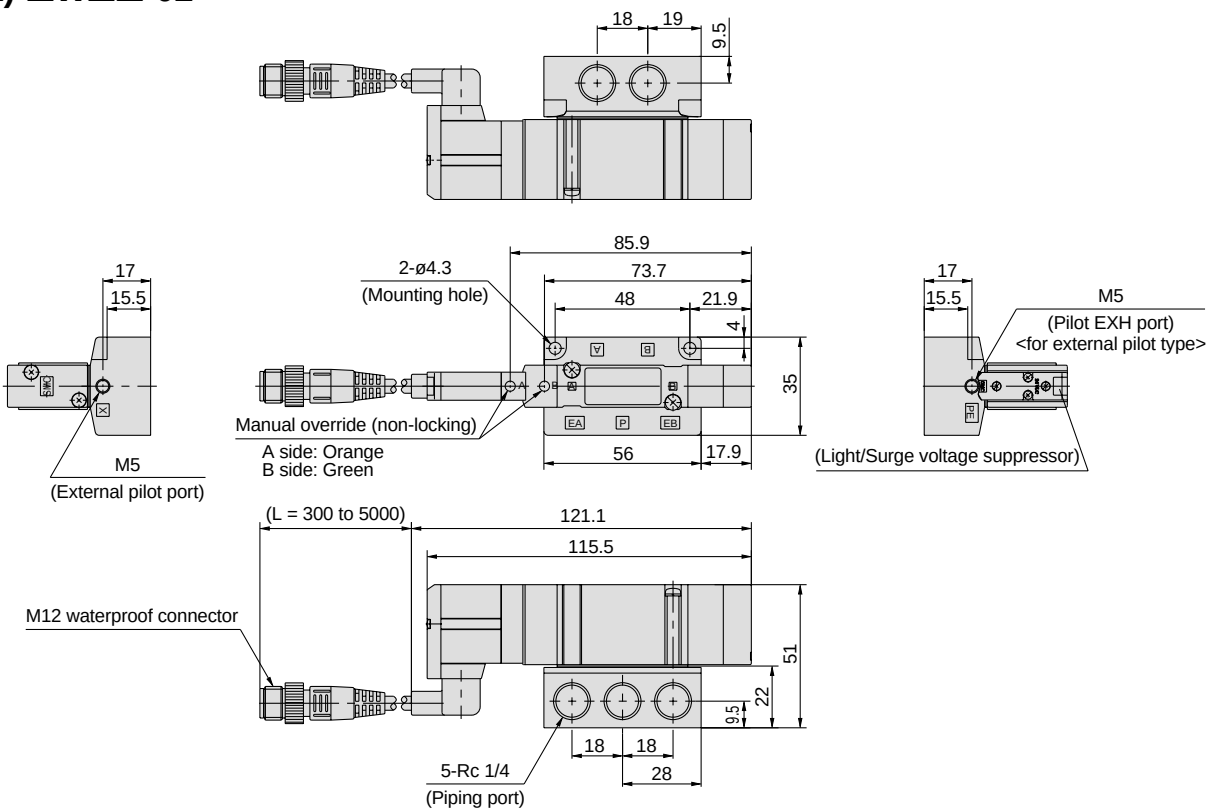

Dimensions: Series SV3000

2 position single/double [M12 waterproof connector type]
SV3□00(R)-□W□□-02, 03

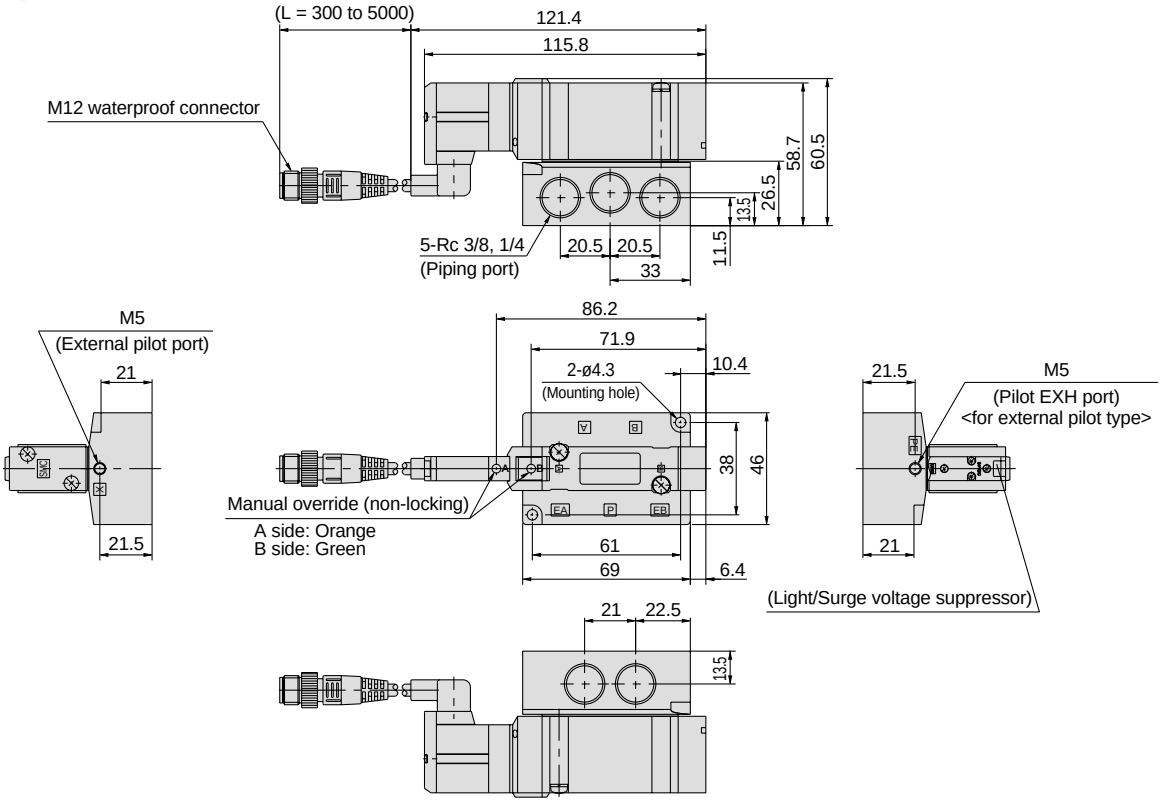

3 position closed centre/exhaust centre/pressure centre [M12 waterproof connector type]
SV3□00(R)-□W□□-02, 03

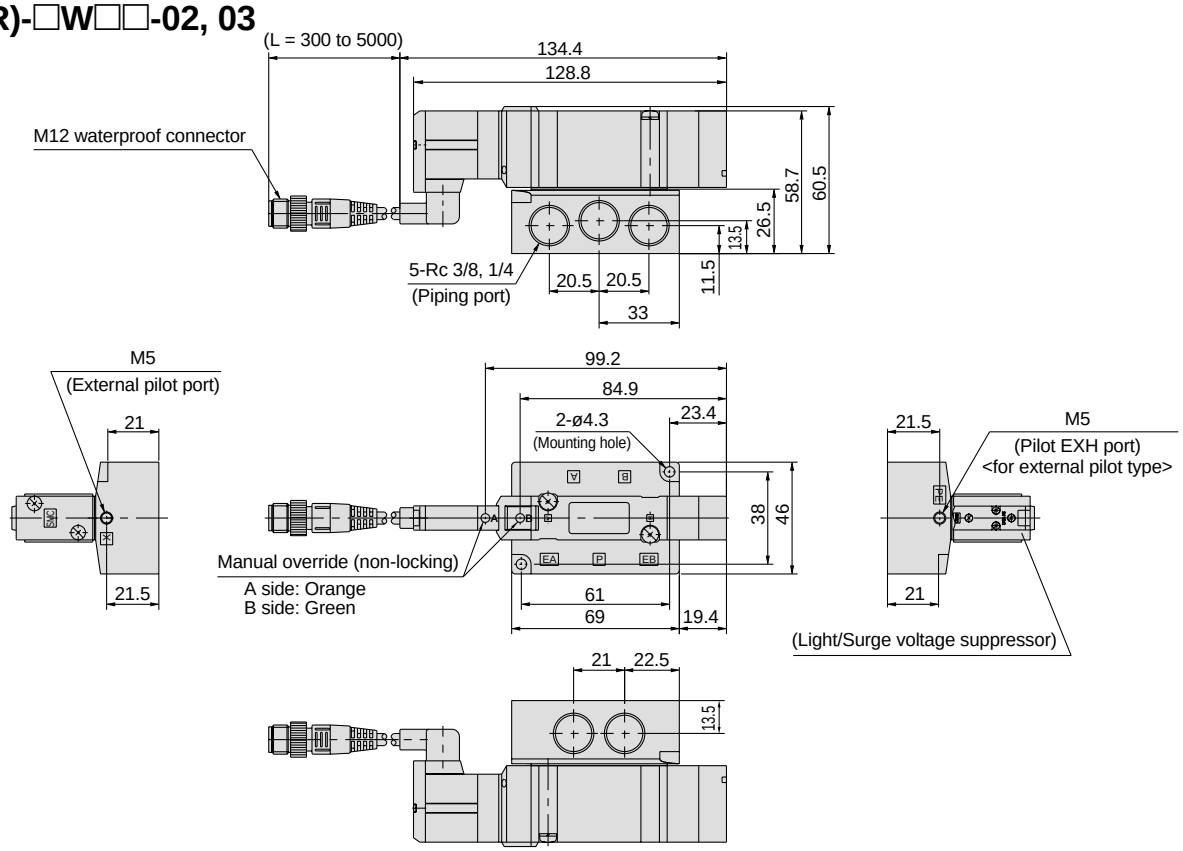

Dimensions: Series SV4000

2 position single/double [M12 waterproof connector type]

SV4□00(R)-□W□□-03, 04

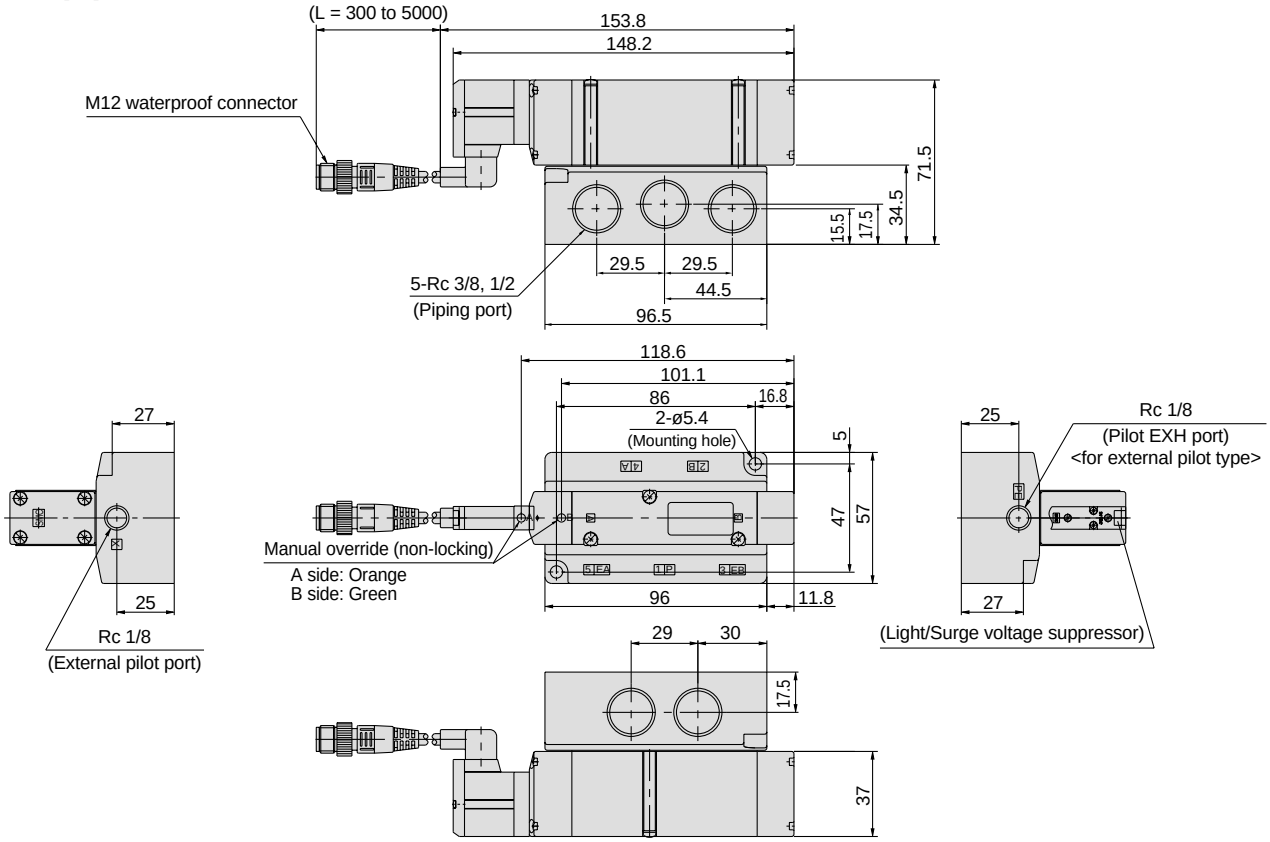

3 position closed centre/exhaust centre/pressure centre [M12 waterproof connector type]

SV4□00(R)-□W□□-03, 04

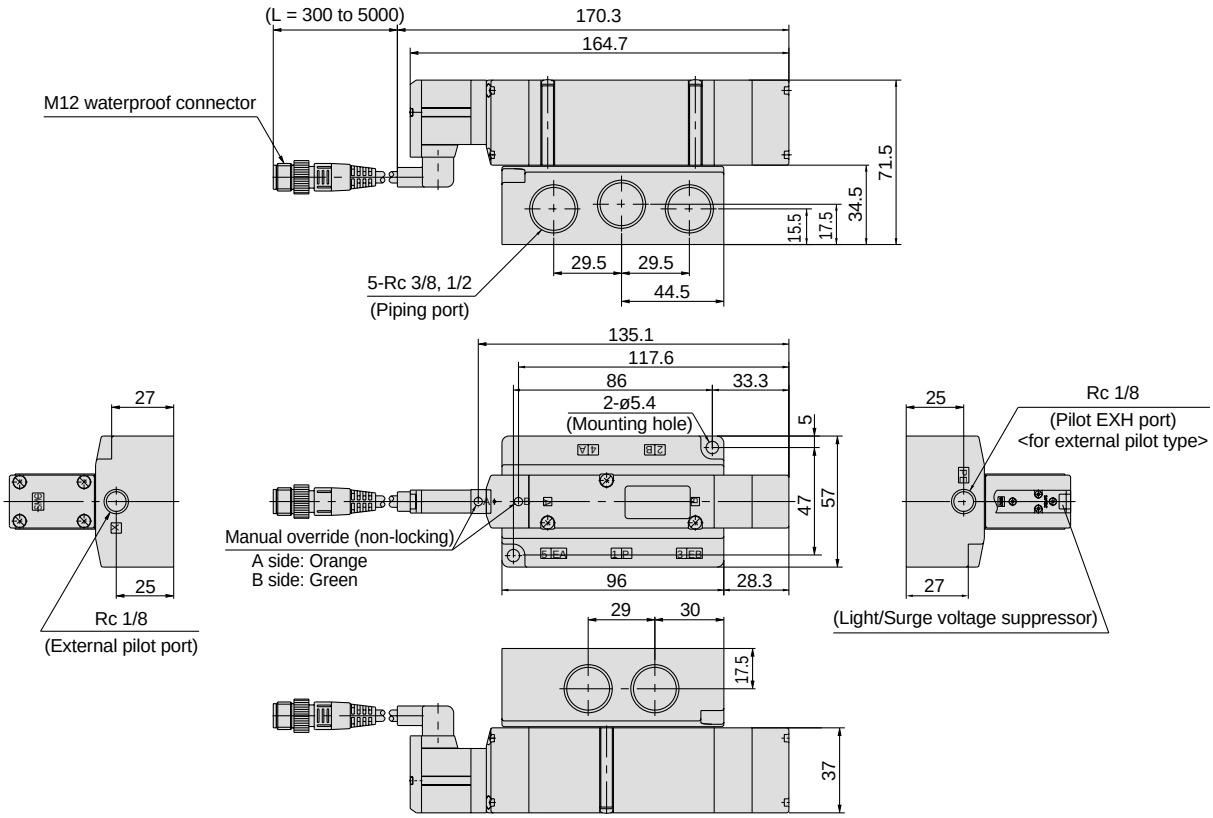

Series SV
Made to Order Specifications

MADE TO ORDER

Contact SMC regarding detailed specifications, lead times and pricing.

1 Main Valve Fluoro Rubber Specification — Symbol -X90

Fluoro rubber is used for rubber parts of the main valve to allow use in applications such as the following.

1. When using a lubricant other than the recommended turbine oil, and there is a possibility of malfunction due to swelling of the spool valve seals.
2. When ozone enters or is generated in the air supply.

Part no. SV 1 2 3 4 □00 – □□□□ – □ – X90

● **Entry is the same as standard products.**

Specifications and performance are the same as standard products.

Note) Because in series-X90 fluoro rubber is used for only main valve, the rubber parts of the application/usage in conditions requiring heat resistance should be avoided.

2 Single, Double Common Type — Symbol -X5

Single solenoid and double solenoid can be changed at the installation.

How to order

SV 1 2 3 4 200 □ – □ □ □ D – X5

Manual override

● **Entry is the same as standard products.**

Specifications

Valve configuration	Pilot type 2 position 5 port solenoid valve		
Type of actuation	Single solenoid, double solenoid common type		
Internal pilot operating pressure range MPa	2 position single		0.15 to 0.7
	2 position double		0.15 to 0.7
External pilot operating pressure range MPa	Operating pressure range		–100kPa to 0.7
	Pilot pressure range	2 position single	0.25 to 0.7
		2 position double	0.25 to 0.7
Ambient and fluid temperature °C	–10 to 50 (with no freezing) Note)		
Power consumption W	0.6 (With light: 0.65)		

∗ Other specifications (effective area, response time, etc.) are the same as standard products.

Note) Refer to page 102.

⚠Caution

Operating precautions

1. The single solenoid specification is applicable when shipped from the factory. (Refer to Figure 1.)
2. For use as a double solenoid, set the manual override and connector assembly as follows.
   ①. Remove the B side manual override (green) label, and turn the slit of the B side manual override with a watchmakers screw driver so that it is positioned as shown in Figure 2.
3. When set for double solenoid, do not apply current to solenoids on both sides at the same time.
4. Refer to page 105 for details on electrical connections and electrical circuits with light and surge voltage suppressor.
5. Dimensions are the same as standard products.

Figure 1. When shipped: Manual override detail for single solenoid specification

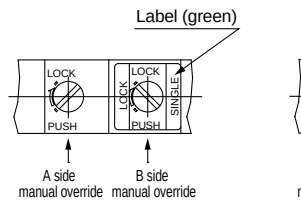

Figure 2. Manual override detail when changed to double solenoid

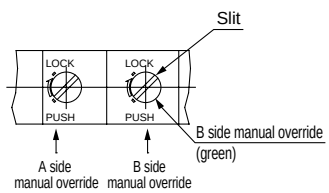

EX500 Decentralized Serial Type Manifold

Series SV$^{1}_{2}_{3}_{4}$000: Tie-rod base / Cassette base

Manifold Specification Sheet

Follow procedures ① through ③.

Date:

Customer name			
Contact person			
Specification sheet no.			
Purchase order no.			
Equipment name			
Quantity	set(s)	Required date	

❶ Manifolds

Refer to page 8 for appropriate specification symbols to fill in the blanks below.

SS5V □ — W □ S □ D — □ □ □ — □ — □

Series

1	SV1000
2	SV2000
3	SV3000
4	SV4000

Manifold type

10	Tie-rod base
16	Cassette base

Cassette base available for SV1000, 2000 only.

SI unit

0	Without SI unit
A1W	For remote I/O
A2W	For DeviceNet/ProfiBus

Valve stations
Includes the number of blanking plate assemblies.

P, E port position

Supply/Exhaust block assembly specification

A, B port size
For "M" (mixed ports), indicate the port size, such as C3 or C4, instead of a "○" in the ⓐ section of the station table.

Option
Manifold mounting and DIN rail length can be specified.

❷ Valves

Refer to page 9 for appropriate specification symbols to fill in the blanks below.

SV □ ∗00 ∗ ∗ — 5F □ □

Series

Type of actuation
Indicate in the station table below.

Pilot type
When using an external pilot valve, enter a "○" in the ⓑ section of the station table below.
However, the external pilot specification is not available for 4 position dual 3 port valves.

Back pressure check valve
When using a valve with back pressure check valve, enter a "○" in section ⓒ of the station table below.

Light/Surge voltage suppressor

Manual override

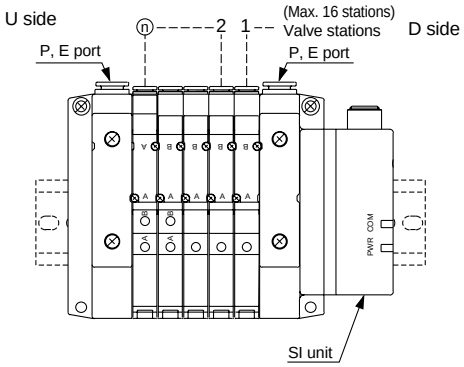

❸ Stations

Indicate the layout of valves, etc., with a "○".

Valve stations												16	15	14	13	12	11	10	9	8	7	6	5	4	3	2	1	Quantity
ⓐ	2 position	Single solenoid																										
		Double solenoid																										
	3 position	Closed center																										
		Exhaust center																										
		Pressure center																										
	4 position dual 3 port valve	N.C./N.C.																										
		N.O./N.O.																										
		N.C./N.O.																										
	Relay output module	1 output																										
		2 outputs																										
	Blanking plate assembly																											
ⓑ	External pilot specification (enter only for external pilot)																											
ⓒ	With back pressure check valve (enter only for back pressure check valve)																											
ⓓ	Supply																											
	Exhaust																											
ⓔ	SUP block plate assembly																											
	EXH block plate assembly																											
ⓕ	Wiring specifications	Single wiring																										
		Double wiring																										

Enter only when specifying the wiring.

For SMC use only

Enter ordered part numbers.

	Part no.	Qty.

	Part no.	Qty.

Order no.	
Clerk (code no.)	
Dept. code	

Date:

Customer name	
Contact person	
Specification sheet no.	
Purchase order no.	
Equipment name	
Quantity	set(s) Required date

EX250 Integrated Input/Output Serial Type Manifold

Series SV$^{1}_{2}_{3}$000: Tie-rod base

Manifold Specification Sheet

Follow procedures ① through ③.

❶ Manifolds

Refer to page 24 for appropriate specification symbols to fill in the blanks below.

SS5V □ — W10S1 □ □ □ □ D — □ □ □ — □ — □

Series

1	SV1000
2	SV2000
3	SV3000

SI unit

0	Without SI unit
NW	For ProfiBus-DP
QW	For DeviceNet

Input block

Input block type

Nil	Without input block
1	M12: 2 inputs
2	M12: 4 inputs
3	M8: 4 inputs (3 pins)

Input block common specification

Nil	Positive COM
N	Negative COM

Valve stations
Includes the number of blanking plate assemblies.

P, E port position

Supply/Exhaust block assembly specification

A, B port size
For mixed mounting, indicate the port size, such as C3 or C4, instead of a "○" in the ⓐ section of the station table.

Option
Manifold mounting and DIN rail length can be specified.

❷ Valves

Refer to page 25 for appropriate specification symbols to fill in the blanks below.

SV □ ∗00 ∗ ∗ — 5F □ □

Series

Type of actuation
Indicate in the station table below.

Pilot type
When using an external pilot valve, enter a "○" in the ⓑ section of the station table below. However, the external pilot specification is not available for 4 position dual 3 port valves.

Back pressure check valve
When using a valve with back pressure check valve, enter a "○" in section ⓒ of the station table below.

Light/Surge voltage suppressor

Manual override

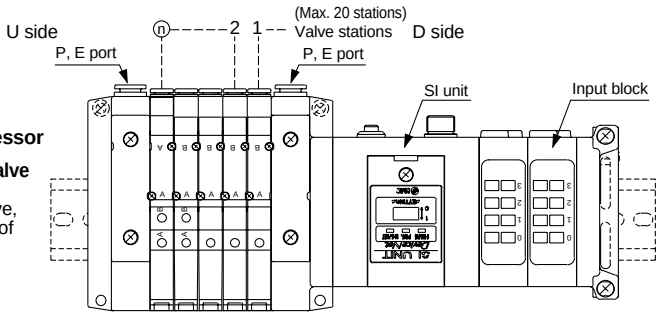

❸ Stations

Indicate the layout of valves, etc., with a "○".

Valve stations												16	15	14	13	12	11	10	9	8	7	6	5	4	3	2	1	Quantity
ⓐ	2 position	Single solenoid																										
		Double solenoid																										
	3 position	Closed center																										
		Exhaust center																										
		Pressure center																										
	4 position dual 3 port valve	N.C./N.C.																										
		N.O./N.O.																										
		N.C./N.O.																										
	Relay output module	1 output																										
		2 outputs																										
	Blanking plate assembly																											
ⓑ	External pilot specification (enter only for external pilot)																											
ⓒ	With back pressure check valve (enter only for back pressure check valve)																											
ⓓ	Supply																											
	Exhaust																											
ⓔ	SUP block plate assembly																											
	EXH block plate assembly																											
ⓕ	Wiring specifications	Single wiring																										
		Double wiring																										

Enter only when specifying the wiring.

For SMC use only

Enter ordered part numbers.

	Part no.	Qty.

	Part no.	Qty.

Order no.	
Clerk (code no.)	
Dept. code	

EX120 Dedicated Output Serial Type Manifold

Series SV$^{1}_{2}_{3}_{4}$000: Tie-rod base / Cassette base

Manifold Specification Sheet

Follow procedures ① through ③.

Date:

Customer name			
Contact person			
Specification sheet no.			
Purchase order no.			
Equipment name			
Quantity	set(s)	Required date	

❶ Manifolds

Refer to page 32 for appropriate specification symbols to fill in the blanks below.

SS5V □ — □ S3 □ D — □ □ □ — □ — □

Series

1	SV1000
2	SV2000
3	SV3000
4	SV4000

Manifold type

10	Tie-rod base
16	Cassette base

Cassette base available for SV1000, 2000 only.

SI unit

Valve stations
Includes the number of blanking plate assemblies.

P, E port position

Supply/Exhaust block assembly specification

A, B port size
For "M" (mixed ports), indicate the port size, such as C3 or C4, instead of a "○" in the ⓐ section of the station table.

Option
Manifold mounting and DIN rail length can be specified.

❷ Valves

Refer to page 33 for appropriate specification symbols to fill in the blanks below.

SV □ ∗00 ∗ ∗ — 5F □ □

Series

Type of actuation
Indicate in the station table below.

Pilot type
When using an external pilot valve, enter a "○" in the ⓑ section of the station table below.
However, the external pilot specification is not available for 4 position dual 3 port valves.

Back pressure check valve
When using a valve with back pressure check valve, enter a "○" in section ⓒ of the station table below.

Light/Surge voltage suppressor

Manual override

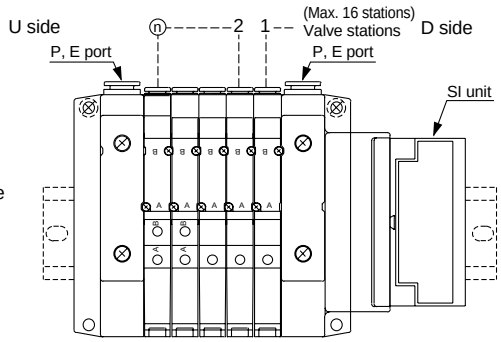

❸ Stations

Indicate the layout of valves, etc., with a "○".

Valve stations												16	15	14	13	12	11	10	9	8	7	6	5	4	3	2	1	Quantity
ⓐ	2 position	Single solenoid																										
		Double solenoid																										
	3 position	Closed center																										
		Exhaust center																										
		Pressure center																										
	4 position dual 3 port valve	N.C./N.C.																										
		N.O./N.O.																										
		N.C./N.O.																										
	Relay output module	1 output																										
		2 outputs																										
	Blanking plate assembly																											
ⓑ	External pilot specification (enter only for external pilot)																											
ⓒ	With back pressure check valve (enter only for back pressure check valve)																											
ⓓ	Supply																											
	Exhaust																											
ⓔ	SUP block plate assembly																											
	EXH block plate assembly																											
ⓕ	Wiring specifications	Single wiring																										
		Double wiring																										

Enter only when specifying the wiring.

For SMC use only

Enter ordered part numbers.

	Part no.	Qty.

	Part no.	Qty.

Order no.	
Clerk (code no.)	
Dept. code	

Date:

Customer name	
Contact person	
Specification sheet no.	
Purchase order no.	
Equipment name	
Quantity	set(s) Required date

Circular Connector Type Manifold

Series SV$^{1}_{2}{}^{3}_{4}$000: Tie-rod base / Cassette base

Manifold Specification Sheet

Follow procedures ① through ③.

❶ Manifolds

Refer to page 44 for appropriate specification symbols to fill in the blanks below.

SS5V □ — W □ CD — □ □ □ — □ — □

Series

1	SV1000
2	SV2000
3	SV3000
4	SV4000

Manifold type

10	Tie-rod base
16	Cassette base

Cassette base available for SV1000, 2000 only.

Valve stations
Includes the number of blanking plate assemblies.

P, E port position

Supply/Exhaust block assembly specification

A, B port size
For "M" (mixed ports), indicate the port size, such as C3 or C4, instead of a "○" in the ⓐ section of the station table.

Option
Manifold mounting and DIN rail length can be specified.

❷ Valves

Refer to page 45 for appropriate specification symbols to fill in the blanks below.

SV □ ∗ 00 ∗ ∗ — $^{5}_{6}$F □ □

Series

Type of actuation
Indicate in the station table below.

Pilot type
When using an external pilot valve, enter a "○" in the ⓑ section of the station table below.
However, the external pilot specification is not available for 4 position dual 3 port valves.

Back pressure check valve
When using a valve with back pressure check valve, enter a "○" in section ⓒ of the station table below.

Light/Surge voltage suppressor

Manual override

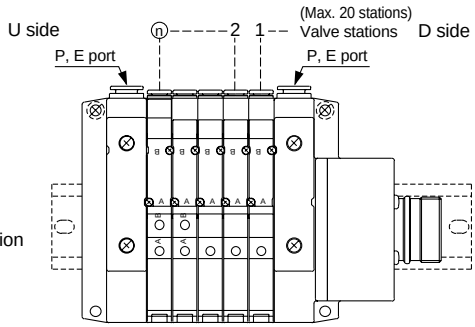

❸ Stations

Indicate the layout of valves, etc., with a "○".

Valve stations												16	15	14	13	12	11	10	9	8	7	6	5	4	3	2	1	Quantity
ⓐ	2 position	Single solenoid																										
		Double solenoid																										
	3 position	Closed center																										
		Exhaust center																										
		Pressure center																										
	4 position dual 3 port valve	N.C./N.C.																										
		N.O./N.O.																										
		N.C./N.O.																										
	Relay output module	1 output																										
		2 outputs																										
	Blanking plate assembly																											
ⓑ	External pilot specification (enter only for external pilot)																											
ⓒ	With back pressure check valve (enter only for back pressure check valve)																											
ⓓ	Supply																											
	Exhaust																											
ⓔ	SUP block plate assembly																											
	EXH block plate assembly																											
ⓕ	Wiring specifications	Single wiring																										
		Double wiring																										

Enter only when specifying the wiring.

For SMC use only

Enter ordered part numbers.

	Part no.	Qty.

	Part no.	Qty.

Order no.	
Clerk (code no.)	
Dept. code	

Date:

Customer name	
Contact person	
Specification sheet no.	
Purchase order no.	
Equipment name	
Quantity	set(s) Required date

D-sub Connector
Flat Ribbon Cable Connector **Type Manifold**

Series SV$^{1}_{2}{}^{3}_{4}$000: Tie-rod base / Cassette base

Manifold Specification Sheet

Follow procedures ①through ③.

❶ Manifolds

Refer to page 54 for appropriate specification symbols to fill in the blanks below.

SS5V □ — □□ D □ — □□ □ — □ — □

Series

1	SV1000
2	SV2000
3	SV3000
4	SV4000

Manifold type

10	Tie-rod base
16	Cassette base

Cassette base available for SV1000, 2000 only.

Connector type

F	D-sub connector 25 pins
P	Flat ribbon cable connector 26 pins
PG	Flat ribbon cable connector 20 pins
PH	Flat ribbon cable connector 10 pins

Valve stations
Includes the number of blanking plate assemblies.

Connector entry direction

1	Upward
2	Lateral

P, E port position

Supply/Exhaust block assembly specification

A, B port size
For "M" (mixed ports), indicate the port size, such as C3 or C4, instead of a "○" in the ⓐ section of the station table.

Option
Manifold mounting and DIN rail length can be specified.

❷ Valves

Refer to page 55 for appropriate specification symbols to fill in the blanks below.

SV □ ∗00 ∗ ∗ — 5/6F □ □

Series

Type of actuation
Indicate in the station table below.

Pilot type
When using an external pilot valve, enter a "○" in the ⓑ section of the station table below.
However, the external pilot specification is not available for 4 position dual 3 port valves.

Back pressure check valve
When using a valve with back pressure check valve, enter a "○" in section ⓒ of the station table below.

Light/Surge voltage suppressor

Manual override

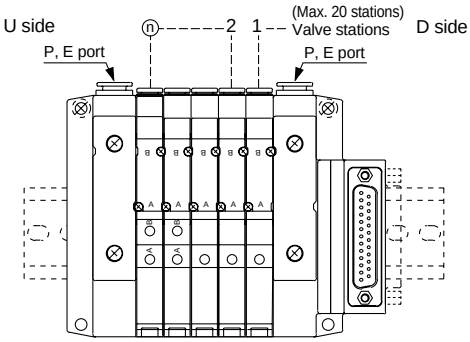

❸ Stations

Indicate the layout of valves, etc., with a "○".

Valve stations												16	15	14	13	12	11	10	9	8	7	6	5	4	3	2	1	Quantity
ⓐ	2 position	Single solenoid																										
		Double solenoid																										
	3 position	Closed center																										
		Exhaust center																										
		Pressure center																										
	4 position dual 3 port valve	N.C./N.C.																										
		N.O./N.O.																										
		N.C./N.O.																										
	Relay output module	1 output																										
		2 outputs																										
	Blanking plate assembly																											
ⓑ	External pilot specification (enter only for external pilot)																											
ⓒ	With back pressure check valve (enter only for back pressure check valve)																											
ⓓ	Supply																											
	Exhaust																											
ⓔ	SUP block plate assembly																											
	EXH block plate assembly																											
ⓕ	Wiring specifications	Single wiring																										
		Double wiring																										

Enter only when specifying the wiring.

For SMC use only

Enter ordered part numbers.

	Part no.	Qty.

	Part no.	Qty.

Order no.	
Clerk (code no.)	
Dept. code	

Date:

Customer name	
Contact person	
Specification sheet no.	
Purchase order no.	
Equipment name	
Quantity	set(s) Required date

EX500 Serial System

Input Unit Manifold Specification Sheet

To order, enter the input manifold part number + ∗block part number together.
For remote I/O (RIO) type, be sure to enter "-X1" at the end of each part number.

❶ Input Manifolds

Enter symbols for the required specifications in the blanks below.
An input manifold includes the input unit + end block + DIN rail.

EEX500 —IB1 — □ □ □ — □ (∗1)

Input unit specification

Connector type

E	M8 connector
T	M12 connector
M	M8, M12 mixed

Stations

1	1 station
⋮	⋮
8	8 stations

Applicable GW unit

Nil	DeviceNet PROFIBUS-DP
-X1	Remote I/O (RIO)

For the remote I/O (RIO) type, be sure to enter "-X1" at the end of the part number.

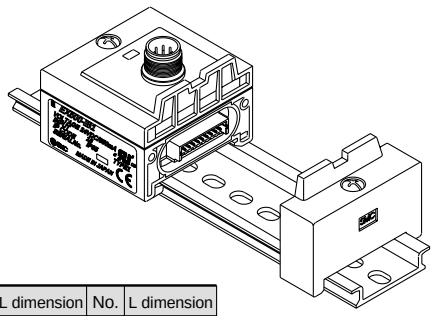

DIN rail L dimensions [mm]

Stations		M8 input block (m)								
		0	1	2	3	4	5	6	7	8
M12 input block (n)	0		0	1	2	3	4	5	6	7
	1	1	2	3	4	5	6	7	8	
	2	2	3	4	5	6	7	8		
	3	4	5	6	7	8	9			
	4	6	7	8	9	10				
	5	7	8	9	10					
	6	9	10	11						
	7	10	11							
	8	12								

Connector type:
For T (n = 1 to 8)

Connector type:
For M (m + n = 2 to 8)

Connector type:
For E (m = 1 to 8)

L dimension

No.	L dimension	No.	L dimension
0	98	7	185.5
1	110.5	8	198
2	123	9	210.5
3	135.5	10	223
4	148	11	235.5
5	160.5	12	248
6	173		

∗1) When a DIN rail other than the above is required, refer to the separate DIN rail dimensions (page 85), and enter a number form the L dimension table at the end of the part number.

❷ Input Blocks

Enter symbols for the required specifications in the blanks below.
Waterproof caps are attached to input blocks.

∗EX500— IE □ □

Block type

1	M8 connector, PNP specification
2	M8 connector, NPN specification
3	M12 connector, PNP specification
4	M12 connector, NPN specification
5	8 point integrated type, M8 connector, PNP specification
6	8 point integrated type, M8 connector, NPN specification

Applicable GW unit

Nil	DeviceNet PROFIBUS-DP
-X1	Remote I/O (RIO)

For the remote I/O (RIO) type, be sure to enter "-X1" at the end of the part number.

Ⓐ **M8 input block** Ⓑ **M12 input block** Ⓒ **8 point integrated type input block**

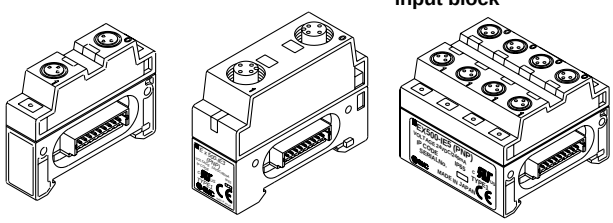

Indicate input sensor specifications and block arrangement (order) with "○" symbols.

Input sensor specifications		PNP (current source) NPN (current sink)									
Arrangement (order)		1	2	3	4	5	6	7	8		Quantity
Ⓐ	M8 input block										
Ⓑ	M12 input block										
Ⓒ	8 point integrated type input block (M8) ∗2)										

∗2) The 8 point integrated type input block corresponds to four M8 input blocks.

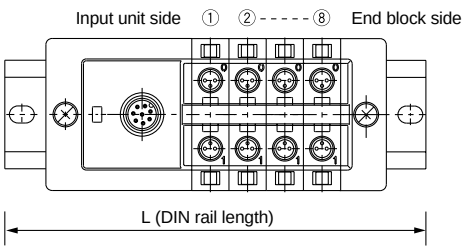

For SMC use only

Enter the part number to be ordered, and circle the connector type and sensor specification.

Connector type		Sensor specification	Description	Part number Note 1)	Qty.
–		–	① Input manifold	EEX500-IB1-	
E	M8 connector	PNP	② Input block Note 2)	∗EX500-IE	
T	M12 connector			∗EX500-IE	
M	M8, M12 mixed	NPN		∗EX500-IE	

Order no.	
P.O. no.	
Clerk (code no.)	
Dept. code	

Note 1) When the gateway (GW) unit is an RIO type, enter "-X1"at the end of each part number.
Note 2) For input blocks, enter the total number of each block used.

Series SV
Safety Instructions

These safety instructions are intended to prevent a hazardous situation and/or equipment damage. These instructions indicate the level of potential hazard by a label of **"Caution", "Warning" or "Danger"**. To ensure safety, be sure to observe ISO 4414 Note 1), JIS B 8370 Note 2) and other safety practices.

⚠ **Caution :** Operator error could result in injury or equipment damage.

⚠ **Warning :** Operator error could result in serious injury or loss of life.

⚠ **Danger :** In extreme conditions, there is a possible result of serious injury or loss of life.

Note 1) ISO 4414: Pneumatic fluid power – Recommendations for the application of equipment to transmission and control systems

Note 2) JIS B 8370: General Rules for Pneumatic Equipment

⚠Warning

1. The compatibility of pneumatic equipment is the responsibility of the person who designs the pneumatic system or decides its specifications.

Since the products specified here are used in various operating conditions, their compatibility for the specific pneumatic system must be based on specifications or after analysis and/or tests to meet your specific requirements.

2. Only trained personnel should operate pneumatically operated machinery and equipment.

Compressed air can be dangerous if an operator is unfamiliar with it. Assembly, handling or repair of pneumatic systems should be performed by trained and experienced operators.

3. Do not service machinery/equipment or attempt to remove components until safety is confirmed.

1. Inspection and maintenance of machinery/equipment should only be performed after confirmation of safe locked-out control positions.
2. When equipment is to be removed, confirm the safety process as mentioned above. Cut the supply pressure for this equipment and exhaust all residual compressed air in the system.
3. Before machinery/equipment is restarted, take measures to prevent shooting-out of cylinder piston rod, etc. (Bleed air into the system gradually to create back-pressure.)

4. Contact SMC if the product is to be used in any of the following conditions:

1. Conditions and environments beyond the given specifications, or if product is used outdoors.
2. Installation on equipment in conjunction with atomic energy, railway, air navigation, vehicles, medical equipment, food and beverages, recreation equipment, emergency stop circuits, press applications, or safety equipment.
3. An application which has the possibility of having negative effects on people, property, or animals, requiring special safety analysis.

Series SV
5 Port Solenoid Valve Precautions 1

Be sure to read before handling.

Design

⚠Warning

1. Actuator drive

When an actuator, such as a cylinder, is to be driven using a valve, take appropriate measures to prevent potential danger caused by actuator operation.

2. Intermediate stopping

When a 3 position closed center valve is used to stop a cylinder at an intermediate position, accurate stopping of the piston in a predetermined position is not possible due to the compressibility of air.

Furthermore, since valves and cylinders are not guaranteed for zero air leakage, it may not be possible to hold a stopped position for an extended length of time. Contact SMC if it is necessary to hold a stopped position for an extended time.

3. Effect of back pressure when using a manifold

Use caution when valves are used on a common exhaust manifold, as actuator malfunction due to back pressure may occur.

Special caution is necessary when driving an air operated valve or single acting cylinder, or when using a 3 position exhaust center valve. Since there is a possibility of malfunction due to exhaust from other actuators, use EXH block plates to divide the exhaust, or take other measures, when there may be an adverse effect from back pressure.

4. Holding of pressure (including vacuum)

Since valves are subject to air leakage, they cannot be used for applications such as holding pressure (including vacuum) in a pressure vessel.

5. Cannot be used as an emergency shutoff valve, etc.

The valves presented in this catalog are not designed for safety applications such as an emergency shutoff valve. If the valves are used in this type of system, other reliable safety assurance measures should also be adopted.

6. Maintenance space

The installation should allow sufficient space for maintenance activities (removal of valve, etc.).

7. Release of residual pressure

Provide a residual pressure release function for maintenance purposes. Special consideration should be given to the release of residual pressure between the valve and cylinder in the case of a 3 position closed center type valve.

8. Vacuum applications

When a valve is used for vacuum switching, etc., take measures against the suction of external dust or other contaminants from vacuum pads and exhaust ports, etc. Moreover, an external pilot type valve should be used in this case. Contact SMC in the case of an internal pilot type valve.

9. Double solenoid applications

When first using a double solenoid type, the actuator may operate in an unexpected direction depending on the valve's switch position. Take appropriate measures to prevent potential danger caused by actuator operation.

10. Ventilation

When using valves in a sealed control panel, install a vent so that the pressure inside the control panel will not rise due to exhaust air, and heat generated by the valves will not be trapped.

Selection

⚠Warning

1. Confirm the specifications.

The products presented in this catalog are designed only for use in compressed air systems (including vacuum). Do not operate at pressures or temperatures, etc., beyond the range of specifications, as this can cause damage or malfunction. (Refer to specifications.)

Contact SMC when using a fluid other than compressed air (including vacuum).

2. Extended periods of continuous energization

Contact SMC if valves will be continuously energized for extended periods of time, or the energized time exceeds the de-energized time.

⚠Caution

1. Momentary energization

If a double solenoid valve will be operated with momentary energization, it should be energized for at least 0.1 second.

However, depending on the secondary load conditions, it should be energized until the cylinder reaches the stroke end position, as there is a possibility of malfunction otherwise.

2. Leakage voltage

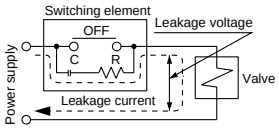

Particularly when using a C-R element (surge voltage suppressor) for the protection of a switching element, take note that leakage voltage will increase due to leakage current flowing through the C-R element. Therefore, select circuits and elements to limit the amount of residual leakage voltage to the following value. Also, when there is a reset malfunction due to leakage voltage, installation of a bleeder resistor is recommended. Contact SMC for details on bleeder resistors.

With DC coil: 3% or less of rated voltage

3. Low temperature operation

Appropriate measures should be taken to avoid solidification or freezing of drainage and moisture at low temperatures.

4. Operation for air blowing

When using a solenoid valve for air blow, use an external pilot type. Take note that when internal pilots and external pilots are used on the same manifold, the pressure drop caused by the air blowing can have an effect on the internal pilot type valves.

Moreover, when compressed air within the pressure range of the established specifications is supplied to the external pilot port, and a double solenoid valve is used for air blowing, the solenoids should normally be energized when air is being blown.

5. Mounting orientation

The mounting orientation is unrestricted.

5 Port Solenoid Valve Precautions 2

Be sure to read before handling.

Mounting

⚠Warning

1. If air leakage increases or equipment does not operate properly, stop operation of the valve.

At the time of mounting and maintenance, etc., connect the compressed air and power supplies, and perform appropriate function and leakage tests to confirm that the unit is mounted properly.

2. Instruction manual

Mount and operate the product after reading the manual carefully and understanding its contents. Also keep the manual where it can be referred to as necessary.

3. Painting and coating

Warnings or specifications printed or pasted on the product should not be erased, removed or covered up.

Consult SMC if paint is to be applied to resinous parts, as this may have an adverse effect due to the paint solvent.

Wiring

⚠Caution

1. Applied voltage

When electric power is connected to the solenoid valve, be careful to apply the proper voltage. Improper voltage may cause malfunction or coil damage.

2. Confirm the connections.

After completing the wiring, confirm that the connections are correct.

Lubrication

⚠Caution

1. Lubrication

1) The valve has been lubricated for life at the factory, and does not require any further lubrication.

2) In the event that it is lubricated, use Class 1 turbine oil (without additives), ISO VG32.

However, once lubrication is applied it must be continued, as the original lubricant may be lost leading to malfunction.

Piping

⚠Caution

1. Preparation before piping

Before piping is connected, it should be thoroughly blown out with air (flushing) or washed to remove chips, cutting oil and other debris from inside the pipe.

2. Wrapping of sealant tape

When connecting pipes and fittings, etc., be sure that chips from the pipe threads and sealing material do not get inside the valve.

Furthermore, when sealant tape is used, leave 1.5 to 2 thread ridges exposed at the end of the threads.

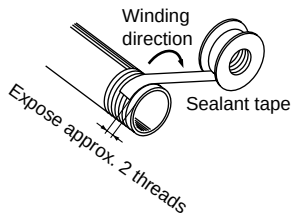

3. When using closed centre valves

When using closed centre type valves, check carefully to be sure there are no air leaks from the piping between the valves and cylinders.

4. Tightening of fittings

When connecting fittings, etc., to valves, tighten as indicated below.

1) M5 type

1. When using SMC fittings, follow the guidelines below.

M5: After tightening by hand, tighten an additional 1/6 turn with a tightening tool. However, if miniature fittings are used, tighten an additional 1/4 turn with a tightening tool after tightening by hand. For fittings with gaskets in 2 locations, e.g., universal elbow or universal tee, tighten an additional 1/2 turn.

Note) If fittings are over-tightened, air leakage may result due to breaking of fitting threads or deformation of the gaskets. However, if fittings are not tightened sufficiently, loosening of the threads and air leakage may occur.

2. When fittings other than SMC fittings are used, follow the instructions of the respective fitting manufacturer.

2) Rc threads

Follow the provided tightening torque levels below.

Connection thread	Proper tightening torque N·m
Rc 1/8	7 to 9
Rc 1/4	12 to 14
Rc 3/8	22 to 24
Rc 1/2	28 to 30

5. Connection of piping to products

When connecting piping to a product, refer to its instruction manual to avoid mistakes regarding the supply port, etc.

5 Port Solenoid Valve Precautions 3

Be sure to read before handling.

Air Supply

⚠Warning

1. Use clean air.

Do not use compressed air which contains chemicals, synthetic oils containing organic solvents, salts or corrosive gases, etc., as this can cause damage or malfunction.

⚠Caution

1. Install air filters.

Install air filters close to valves at their upstream side. A filtration degree of 5μm or less should be selected.

2. Install an air dryer, after-cooler or water separator, etc.

Air that contains excessive drainage may cause malfunction of valves and other pneumatic equipment. Take measures by installing an air dryer, after-cooler or water separator, etc.

3. If excessive carbon powder is generated, eliminate it by installing mist separators at the upstream side of valves.

If excessive carbon powder is generated by the compressor, it may adhere to the inside of valves and cause malfunction.

Refer to SMC's "Air Cleaning Equipment" catalog for further details on compressed air quality mentioned above.

Operating Environment

⚠Warning

1. Do not use valves in atmospheres of corrosive gases, chemicals, salt water, water, steam, or where there is direct contact with any of these.

2. Products with IP65 and IP67 enclosures (based on IEC529) are protected against dust and water, however, these products cannot be used in the water.

3. When using built-in silencer type manifold with an IP67 enclosure, keep the exhaust port of the silencer from coming in direct contact with water or other liquids. Liquid filtration through the exhaust port of the silencer can cause damage to the valve.

4. Do not use in an explosive atmosphere.

5. Do not use in locations subject to vibration or impact. Confirm the specifications in the main section of this catalog.

6. Use a protective cover, etc., to shield valves from direct sunlight.

7. Shield valves from radiated heat generated by nearby heat sources.

8. Employ suitable protective measures in locations where there is contact with oil or welding spatter, etc.

Operating Environment

9. When solenoid valves are mounted in a control panel or are energized for extended periods of time, employ measures to radiate excess heat, so that temperatures remain within the valve specification range.

Maintenance

⚠Warning

1. Perform maintenance procedures as shown in the instruction manual.

If handled improperly, malfunction or damage of machinery or equipment may occur.

2. Removal of equipment and supply/exhaust of compressed air

When equipment is serviced, first confirm that measures are in place to prevent dropping of work pieces and run-away of equipment, etc. Then cut the supply pressure and power, and exhaust all compressed air from the system using its residual pressure release function.

Furthermore, in the case of 3 position closed center type valves, compressed air will remain between valves and cylinders, and must be exhausted similarly.

When the equipment is to be started again after remounting or replacement, first confirm that measures are in place to prevent lurching of actuators, etc., and then confirm that the equipment is operating normally.

3. Low frequency operation

Switch valves at least once every 30 days to prevent malfunction. (Use caution regarding the air supply.)

4. Manual override operation

When the manual override is operated, connected equipment will be actuated. Confirm safety before operating.

⚠Caution

1. Drain flushing

Remove drainage from air filters regularly. (Refer to specifications.)

How to Find the Flow Rate (at air temperature of 20°C)

Subsonic flow when $P_1 + 0.1013 < 1.89\ (P_2 + 0.1013)$

$$Q = 226S\sqrt{\triangle P(P_2 + 0.1013)}$$

Sonic flow when $P_1 + 0.1013 \geq 1.89\ (P_2 + 0.1013)$

$$Q = 113S\ (P_1 + 0.1013)$$

Q: Air flow rate [L/min(ANR)]

S: Effective area (mm^2)

$\triangle P$: Pressure drop ($P_1 - P_2$) [MPa]

P_1: Upstream pressure [MPa]

P_2: Downstream pressure [MPa]

∗ Correction for different air temperatures

Multiply the flow rate calculated with the above formula by a coefficient from the table below.

Air temperature (°C)	–20	–10	0	10	30	40	50	60
Correction coefficient	1.08	1.06	1.04	1.02	0.98	0.97	0.95	0.94

Series SV
Specific Product Precautions 1

Be sure to read before handling.
Refer to pages 101 through 104 for safety instructions and common precautions.

⚠Warning

Manual override operation

Handle carefully, as connected equipment can be actuated through manual override operation.

■ **Non-locking push type**

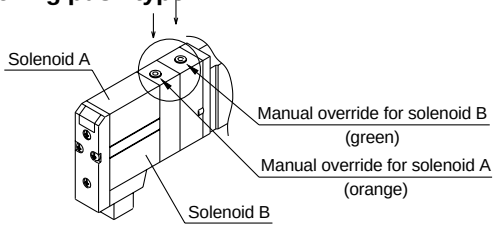

■ **Slotted locking type (screwdriver operated)**

After pushing down, turn in the direction of the arrow.
If it is not turned, it can be operated the same way as the non-locking type.

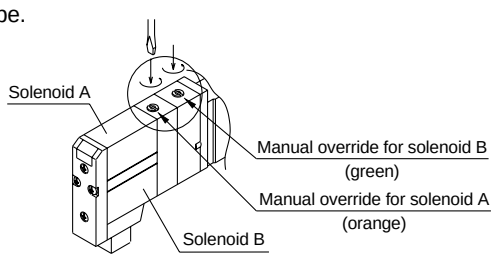

⚠Caution

When locking the manual override on the screwdriver operated slotted locking type, be sure to push it down before turning.

Turning without first pushing it down can cause damage to the manual override and other trouble such as air leakage, etc.

⚠Caution

Exhaust restriction

Since the series SV is a type in which the pilot valve exhaust joins the main valve exhaust inside the valve, care must be taken so that the piping from the exhaust port is not restricted.

⚠Caution

Series SV used as a 3 port valve

Using a 5 port valve as a 3 port valve

Series SV valves can be used as normally closed (N.C.) or normally open (N.O.) 3 port valves by closing one of the cylinder ports (A or B) with a plug. However, they should be used with the exhaust ports kept open. They are convenient at times when a double solenoid type 3 port valve is required.

Plug position		Port B	Port A
Actuation		N.C.	N.O.
Number of solenoids	Single	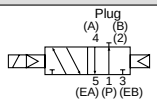	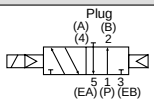
	Double	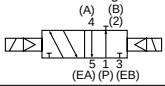	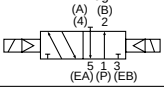

⚠Caution

Light/Surge voltage suppressor

Solenoid valves have no polarity.
Light/surge voltage suppressor

Single solenoid type

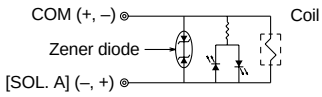

Double solenoid, 3 position type

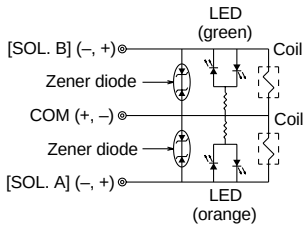

Surge voltage suppressor

Single solenoid type

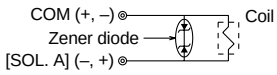

Double solenoid, 3 position type

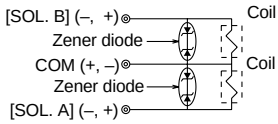

⚠Caution

Light indication

When equipped with light and surge voltage suppressor, the indicator light window turns orange when solenoid A is energized, and it turns green when solenoid B is energized.

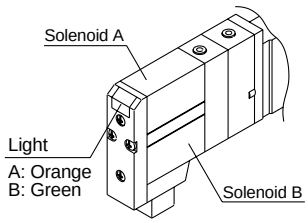

Specific Product Precautions 2

Be sure to read before handling.
Refer to pages 101 through 104 for safety instructions and common precautions.

⚠Caution
Connector entry directions

Connector entry directions for D-sub connectors and flat ribbon cables can be changed. To change the connector's entry direction, press the levers on both sides of the connector, take it off, and change the direction as shown in the drawing. Since lead wire assemblies are attached to the connector, excessive pulling or twisting can cause broken wires or other trouble. Also, take precautions so that lead wires are not caught and pinched when installing the connector.

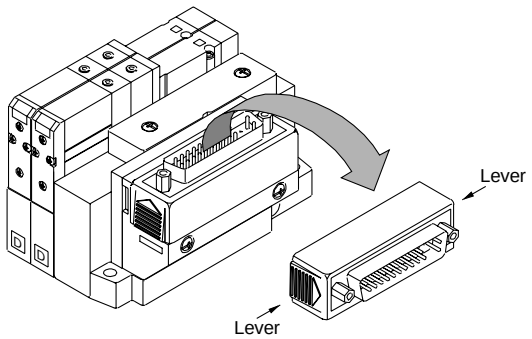

⚠Caution
How to order manifolds

The letter "S" or "D" is indicated on manifold blocks for series SV as shown below. This indication refers to the type substrate assembly (single wiring or double wiring) inside the manifold blocks.
When the manifold specification sheet does not include a wiring specification, all stations will be double wiring specification (D). In this case, single and double valves can be mounted in any position, but when a single valve is used, there will be an unused control signal. To avoid this, indicate positions of manifold blocks for single wiring specification (S) and double wiring specification (D) on a manifold specification sheet. (Note that double, 3 or 4 position valves cannot be used for manifolds blocks with single wiring specification (S).)

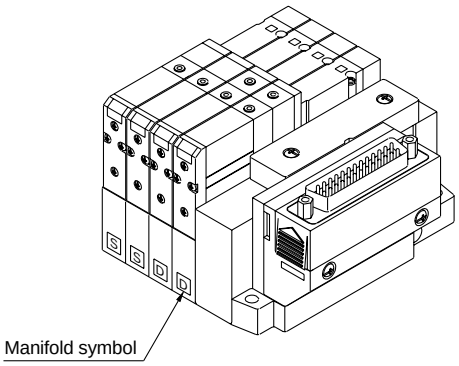

⚠Caution
One-touch fittings

1. Tube attachment/detachment for One-touch fittings

1) Attaching of tube

① Take a tube having no flaws on its periphery and cut it off at a right angle. When cutting the tube, use tube cutters TK-1, 2 or 3. Do not use pinchers, nippers or scissors, etc. If cutting is done with tools other than tube cutters, there is the danger that the tube may be cut diagonally or become flattened, etc., making a secure installation impossible, and causing problems such as the tube pulling out after installation or air leakage. Also allow some extra length in the tube.

② Grasp the tube and push it in slowly, inserting it securely all the way into the fitting.

③ After inserting the tube, pull on it lightly to confirm that it will not come out. If it is not installed securely all the way into the fitting, this can cause problems such as air leakage or the tube pulling out.

2) Detaching of tube

① Push in the release button sufficiently, and push the collar evenly at the same time.

② Pull out the tube while holding down the release button so that it does not come out. If the release button is not pressed down sufficiently, there will be increased bite on the tube and it will become more difficult to pull it out.

③ When the removed tube is to be used again, cut off the end or portion that was connected before reusing it as it may have become worn. If the grabbing or connecting portion of the tube is used as is, this can cause trouble such as air leakage or difficulty in removing the tube.

⚠Caution
Other tube brands

1. When using other than SMC brand tubes, confirm that the following specifications are satisfied with respect to the outside diameter tolerance of the tube.

1) Nylon tube within ±0.1mm
2) Soft nylon tube within ±0.1mm
3) Polyurethane tube within +0.15mm or less
within –0.2mm or less

Do not use tubes which do not meet these outside diameter tolerances. It may not be possible to connect them, or they may cause other trouble, such as air leakage or the tube pulling out after connection.

⚠Caution
Substrate assemblies inside manifolds

Substrate assemblies inside of manifolds cannot be taken apart. Attempting to do so may damage parts.

Specific Product Precautions 3

Be sure to read before handling.
Refer to pages 101 to 104 for safety instructions and common precautions.

Serial wiring EX500/EX250/EX120 Precautions

⚠Warning

1. **These products are intended for use in general factory automation equipment.**
   Avoid using these products in machinery/equipment which affects human safety, and in cases where malfunction or failure can result in extensive damage.
2. **Do not use in explosive atmospheres, environments with inflammable gases, or corrosive environments.**
   This can cause injury or fire, etc.
3. **Work such as transporting, installing, piping, wiring, operation, control and maintenance should be performed by personnel with specialized knowledge.**
   There is a danger of electrocution, injury or fire, etc.
4. **Install an external emergency stop circuit that can promptly stop operation and shut off the power supply.**
5. **Do not rebuild these products, as there is a danger of injury and damage.**

⚠Caution

1. **Read the instruction manual carefully, strictly observe the precautions and operate within the range of the specifications.**
2. **Do not drop these products or submit them to strong impacts. This can cause damage, failure or malfunction, etc.**
3. **In locations with poor electrical conditions, take steps to ensure a steady flow of the rated power supply. Use of a voltage outside of the specifications can cause malfunction, damage to the unit, electrocution or fire, etc.**
4. **Do not touch connector terminals or internal substrates when current is being supplied. There is a danger of malfunction, damage to the unit or electrocution if connector terminals or internal substrates are touched when current is being supplied.**
   Be sure that the power supply is OFF when adding or removing manifold valves or input blocks, etc., or when connecting or disconnecting connectors.
5. **Operate at an ambient temperature that is within the specifications. Even when the ambient temperature range is within the specifications, do not use in locations where there are rapid temperature changes.**
6. **Keep wire scraps and other extraneous material from getting inside these products. This can cause fire, failure or malfunction, etc.**
7. **Give consideration to the operating environment depending on the type of enclosure being used.**
   To achieve IP65 protection, provide appropriate wiring between all units using electrical wiring cables, communication connectors and cables with M12 connectors. Also, provide waterproof caps when there are unused ports, and perform proper mounting of input units, input blocks, SI units and manifold valves, etc. Provide a cover or other protection for applications in which there is constant exposure to water.
8. **Use the proper tightening torques.**
   There is a possibility of damaging threads if tightening exceeds the tightening torque range.

⚠Caution

9. **Provide adequate protection when operating in locations such as the following:**
   - Where noise is generated by static electricity, etc.
   - Where there is a strong electric field
   - Where there is a danger of exposure to radiation
   - When in close proximity to power supply lines
10. **When these products are installed in equipment, provide adequate protection against noise by using noise filters, etc.**
11. **Since these products are components that are used after installation in other equipment, the customer should confirm conformity to EMC directives for the finished product.**
12. **Do not remove the name plate.**
13. **Perform periodic inspections and confirm normal operation. It may otherwise be impossible to guarantee safety due to unexpected malfunction or erroneous operation.**

Power Supply Safety Instructions

⚠Caution

1. **Operation is possible with a single power supply or a separate power supply. However, be sure to provide two wiring systems (one for solenoid valves, and one for input and control units).**
2. **Use the following UL approved products for DC power supply combinations.**
   (1) Controlled voltage current circuit conforming to UL508
   Circuit uses the secondary coil of an isolated transformer as the power supply, satisfying the following conditions.
   - Max. voltage (with no load): 30Vrms (42.4V peak) or less
   - Max. current: ① 8A or less (including shorts), and
     ② When controlled by a circuit protector (fuse, etc.) with the following rating

No-load voltage (V peak)	Max. current rating
0 to 20 [V]	5.0
Over 20 [V] to 30 [V]	$\frac{100}{\text{Peak voltage value}}$

   (2) A circuit (class 2 circuit) with maximum 30Vrms (42.4V peak) or less, and a power supply consisting of a class 2 power supply unit conforming to UL1310, or a class 2 transformer conforming to UL1585

Cable Safety Instructions

⚠Caution

1. **Be careful of mis-wiring. This can cause malfunction, damage and fire in the unit.**
2. **To prevent noise and surge in signal lines, keep all wiring separate from power lines and high voltage lines. Otherwise, this can cause malfunction.**
3. **Check wiring insulation, as defective insulation can cause damage to the unit due to excessive voltage or current.**
4. **Do not bend or pull cables repeatedly , and do not place heavy objects on them or allow them to be pinched. This can cause broken lines.**

Austria
SMC Pneumatik GmbH (Austria).
Girakstrasse 8, A-2100 Korneuburg
Phone: 02262-62280, Fax: 02262-62285

Belgium
SMC Pneumatics N.V./S.A.
Nijverheidsstraat 20, B-2160 Wommelgem
Phone: 03-355-1464, Fax: 03-355-1466

Czech
SMC Czech.s.r.o.
Kodanska 46, CZ-100 10 Prague 10
Phone: 02-67154 790, Fax: 02-67154 793

Denmark
SMC Pneumatik
Knudsminde 4B, DK-8300 Odder
Phone:(45)70252900, Fax: (45)70252901

Estonia
Teknoma Eesti AS
Mustamäe tee 5, EE-0006 Tallinn, Estonia
Phone: 259530, Fax: 259531

Finland
SMC Pneumatiikka OY
Veneentekijäntie 7, SF-00210 Helsinki
Phone: 09-681021, Fax: 09-6810233

France
SMC Pneumatique, S.A.
1, Boulevard de Strasbourg, Parc Gustave Eiffel
Bussy Saint Georges
F-77607 Marne La Vallee Cedex 3
Phone: 01-6476 1000, Fax: 01-6476 1010

Germany
SMC Pneumatik GmbH
Boschring 13-15, D-63329 Egelsbach
Phone: 06103-4020, Fax: 06103-402139

Greece
S. Parianopoulus S.A.
9, Konstantinoupoleos Street,
GR-11855 Athens
Phone: 01-3426076, Fax: 01-3455578

Hungary
SMC Hungary Kft.
Budafoki ut 107-113, 1117 Budapest
Phone: 01-204 4366, Fax: 01-204 4371

Ireland
SMC Pneumatics (Ireland) Ltd.
2002 Citywest Business Campus,
Naas Road, Saggart, Co. Dublin
Phone: 01-403 9000, Fax: 01-464 0500

Italy
SMC Italia S.p.A
Via Garibaldi 62, I-20061 Carugate, (Milano)
Phone: 02-92711, Fax: 02-92150394

Latvia
Ottensten Latvia SIA
Ciekurkalna Prima Gara Linija 11,
LV-1026 Riga, Latvia
Phone: 371-23-68625, Fax: 371-75-56748

Lithuania
UAB Ottensten Lietuva
Savanoriu pr.180, LT-2600 Vilnius, Lithuania
Phone/Fax: 370-2651602

Netherlands
SMC Pneumatics BV
Postbus 308, 1000 AH Amsterdam
Phone: 020-5318888, Fax: 020-5318880

Norway
SMC Pneumatics Norway AS
Vollsveien 13 C, Granfoss Næringspark
N-1324 Lysaker
Tel: (47) 67 12 90 20, Fax: (47) 67 12 90 21

Poland
Semac Co., Ltd.
PL-05-075 Wesola k/Warszaway, ul. Wspolna 1A
Phone: 022-6131847, Fax: 022-613-3028

Portugal
SMC España (Sucursal Portugal), S.A.
Rua de Engº Ferreira Dias 452, 4100 Porto
Phone: 02-610-89-22, Fax: 02-610-89-36

Romania
SMC Romania srl
Vasile Stroescu 19, Sector 2, Bucharest
Phone: 01-210-1354 , Fax: 01-210-1680

Russia
SMC Pneumatik LLC.
36/40 Sredny pr. St. Petersburg 199004
Phone.:(812) 118 5445, Fax:(812) 118 5449

Slovakia
SMC Slovakia s.r.o.
Pribinova ul. C. 25, 819 02 Bratislava
Phone: 0-563 3548, Fax: 07-563 3551

Slovenia
SMC Slovenia d.o.o.
Grajski trg 15, 8360 Zuzemberk
Phone: 068-88 044 Fax: 068-88 041

Spain
SMC España, S.A.
Zuazobidea 14, Pol. Ind. Jundiz,
E-01015 Vitoria
Phone: 945-184 100, Fax: 945-184 124

Sweden
SMC Pneumatics Sweden A.B.
Ekhagsvägen 29-31, S-14105 Huddinge
Phone: 08-603 07 00, Fax: 08-603 07 10

Switzerland
SMC Pneumatik AG
Dorfstrasse 7, CH-8484 Weisslingen
Phone: 052-396-3131, Fax: 052-396-3191

Turkey
Entek Pnömatik San. ve Tic Ltd. Sti.
Perpa Tic. Merkezi Kat: 11 No: 1625,
TR-80270 Okmeydani Istanbul
Phone: 0212-221-1512, Fax: 0212-220-2381

UK
SMC Pneumatics (UK) Ltd
Vincent Avenue, Crownhill,
Milton Keynes, MK8 0AN
Phone: 01908-563888 Fax: 01908-561185

OTHER SUBSIDIARIES WORLDWIDE:

ARGENTINA, AUSTRALIA, BOLIVIA, BRASIL, CANADA, CHILE, CHINA, HONG KONG, INDIA, MALAYSIA, MEXICO, NEW ZEALAND, PHILIPPINES, SINGAPORE, SOUTH KOREA, TAIWAN, THAILAND, USA, VENEZUELA

SMC UK Contact Numbers

Head Office: SMC Pneumatics (UK) Ltd, Vincent Avenue, Crownhill, Milton Keynes MK8 0AN

THE NATIONAL SALES CENTRE FOR ENGLAND & WALES

Internal Sales
(Price, Delivery Information & Order Placement)
Freephone: 0800 138 2930 Fax: 01908 555064
e-mail:sales@smcpneumatics.co.uk

Customer Services
(Post-Order Resolution)
Freephone: 0800 138 2931 Fax: 01908 555065
e-mail: customerservice@smcpneumatics.co.uk

TECHNICAL CENTRE
Freephone: 0800 138 2932 Fax: 01908 555066
e-mail: technical@smcpneumatics.co.uk

SMC FAST RESPONSE
(Literature & Catalogue Requests)
0800 0262006

SMC SALES CENTRE FOR SCOTLAND & N. IRELAND

Tel: 01236 781133 Fax: 01236 780611
SMC Pneumatics (UK) Ltd, 1 Carradale Crescent, Broadwood Business Park, Cumbernauld, Glasgow G69 9LE

SMC UK Sales Partners

Birmingham
JAMES LISTER
Tel: 0121 5803800
Fax: 0121 5535951

Blackburn
BLACKBURN PNEUMATIC SYSTEMS LTD
Tel: 01254 682232
Fax: 01254 682224

Bristol
APPLIED AUTOMATION
Tel: 0117 9827769
Fax: 0117 9235522

Bury St Edmunds
PNEUMATIC LINES
Tel: 01284 706239
Fax: 01284 761218

Cardiff
WALES FLUID POWER
Tel: 02920 494551
Fax: 02920 481955

Plymouth
APPLIED AUTOMATION
Tel: 01752 343300
Fax: 01752 341161

SMC CORPORATION 1-16-4 Shimbashi, Minato-ku, Tokio 105 JAPAN; Phone:03-3502-2740 Fax:03-3508-2480

Produced and printed by SMC European Marketing Centre - 2000/6/02

Specifications are subject to change without prior notice
and any obligation on the part of the manufacturer.