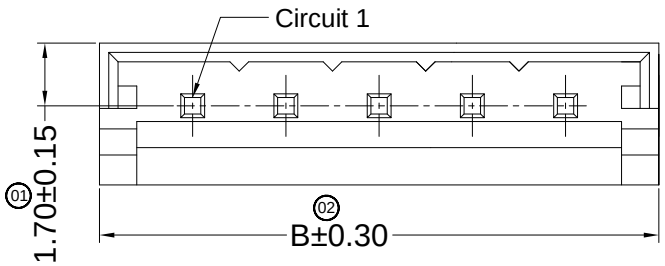

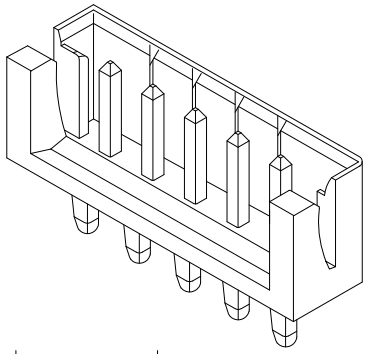

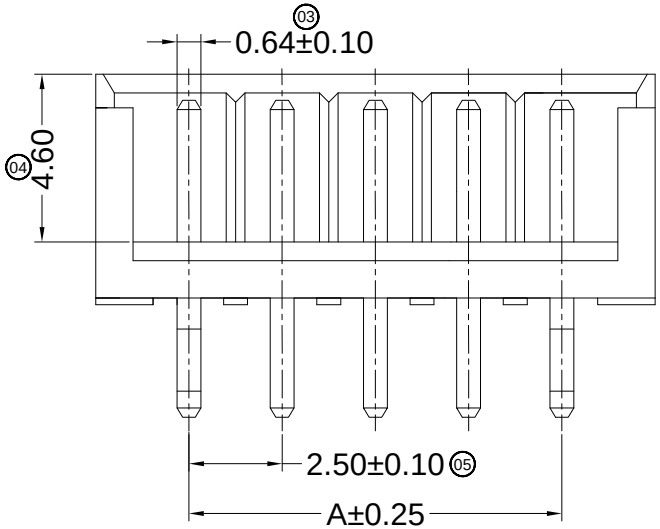

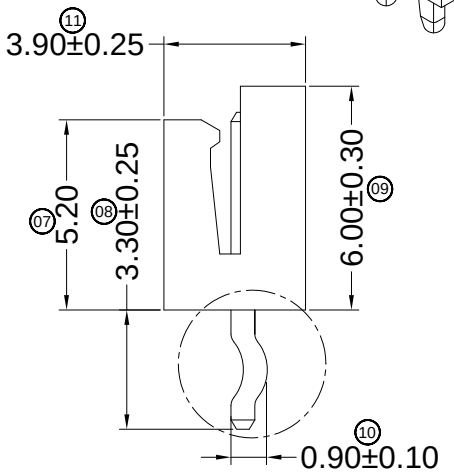

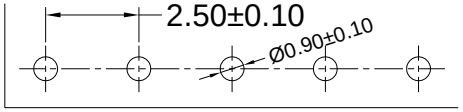

Recommand PCB Layout

X2581WV-XXX-N0SN	Nylon 66 UL 94V-0	Brass	Tin-Plated	X2581H
PART N0	Material	Material(Pin)	Finish(Pin)	Mates With XKB Housing

■ Specifications :

- Voltage rating: 250V AC / DC
- Current rating: 3A AC / DC
- Withstanding voltage: 800V AC/minute
- Temperature range: -25°C~+85°C
- Insulation resistance:≥1000MΩ
- Contact resistance: ≤10mΩ
- After environmental testing：≤20mΩ

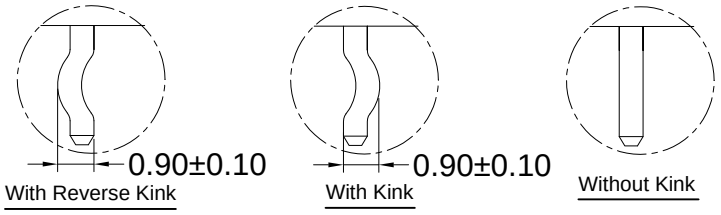

X2581 W V X- XX X-N0 SN XX
① ② ③ ④ ⑤ ⑥ ⑦ ⑧ ⑨

① Series No.
② Category：W-Wafer
③ Welding Board Angle：V-180° ; R-90°
④ Welding Way: Blank-DIP ; S-SMT
⑤ Row No.-Pin No.: XX-Single Row ; 2*XX-Double Row
⑥ Plug the Pin & Special No. : Blank-With Kink
A-Without Kink ; B-With Reverse Kink
⑦ Material: N0 -PA66 94V-0
⑧ Plating Category: G**-Gold Plated Contact
V**- All Gold-Plated
01-Gold Flash 02-2u" 03-3u"
05-5u" 10-10u" 15-15u"
SN-Bright Tin Plating (70u")
SN1-Bright Tin Plating (120u" Min).
0-No Plating Material
SW- Fog Tin Plating
HS-Hight temperature Tin
⑨ Color : Blank-Natural Color

Poles	Dimensions (mm)	
	A	B
02	2.50	7.50
03	5.00	10.00
04	7.50	12.50
05	10.00	15.00
06	12.50	17.50
07	15.00	20.00
08	17.50	22.50
09	20.00	25.00
10	22.50	27.50
11	25.00	30.00
12	27.50	32.50
13	30.00	35.00
14	32.50	37.50
15	35.00	40.00

For and on behalf of
XKB INDUSTRIAL PRECISION CO., LIMITED
香港星坤工業精密有限公司
Authorised Signature(s)

MARK	DESCRIPTION	DATE	REVISED	APPROVED
△ X				
△ X				
△ X				

REVISIONS

UNSPECIFIED TOLERANCES	
ANGULAR	±5°
L≤4	±0.2
4< L≤16	±0.3
16< L≤63	±0.4
L> 63	±0.5

DSND		DATE		SCALE: N/A
DWN		DATE		VIEW:
CHKD		DATE		UNIT: mm
APPD		DATE		SIZE: A4

XKB INDUSTRIAL PRECISION CO.,LIMITED

MODEL TYPE: X2581WV-XXX-N0SN
PART NO.: 2.50 mm Crimp Style connectors
DWG NO.:

WEIGHT	SHEET	REVISION
1.0g	1/1	A0