嘉尼企業股份有限公司CANAL ELECTRONIC CO.,LTD.

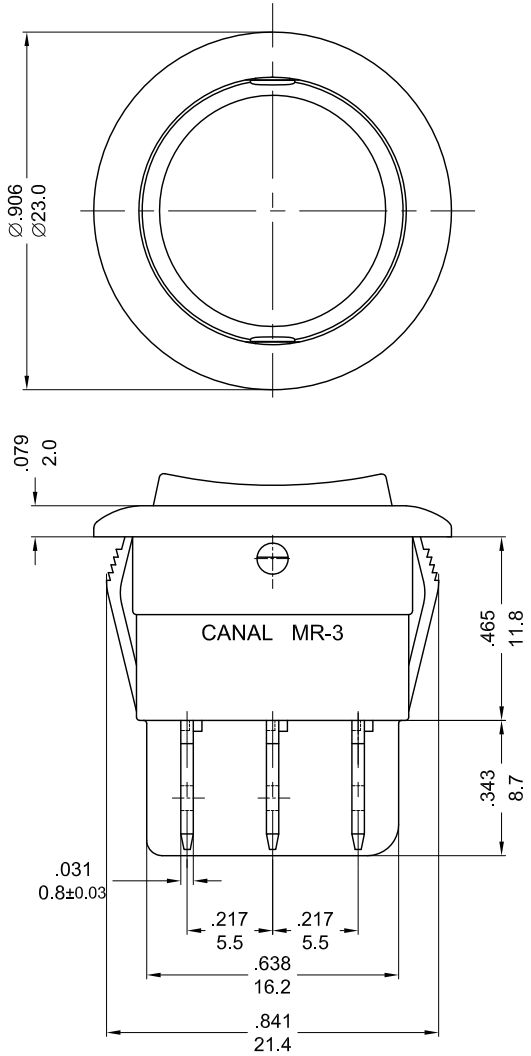

SWITCHING CIRCUIT

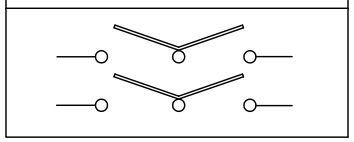

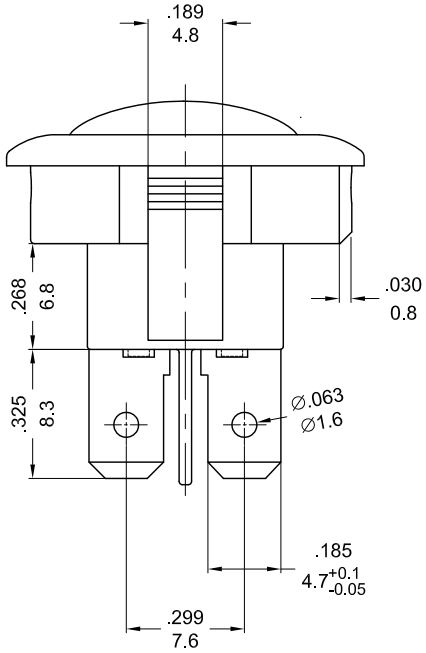

ROCKER SWITCH MODEL MR-3

RATING: 10A 125/250VAC, (UL/CUL)
10(4)A 250V~ T85 (FI/ENEC16)
CONTACT RESISTANCE:20mΩ INITIAL(MAX),
INSULATION RESISTANCE:500VDC 100MΩ(MIN),
UITASTAND VOLTAGE:1000VAC FOR 1 MINUTE.

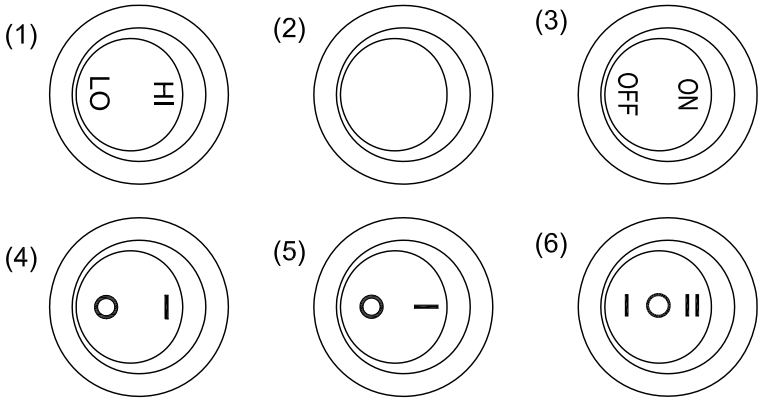

SCALE:1/1

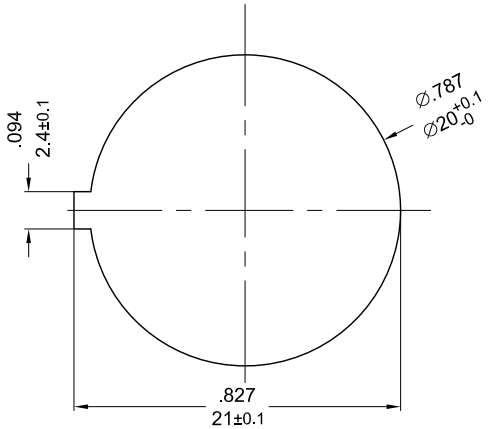

NOTE: TOLERANCES UNLESS OTHERWISE PECIFIED:± 0.012/0.3 (in/mm)

PANEL CUTOUT DIMENSION TABLE

REVISION	DESCRIPTION	REVISED BY	TOLERANCES			ANGLE ½°	UNIT	mm	PART NAME	MR-3 ROUND SPEC DRAWING	DWG NO
4			DRAWN BY	郭洋	DESIGNED BY	蔡劍	SCALE	2/1			S4648B
3											
2 2013.05.03	取消CSA. 重新出圖	郭洋	CHECKED BY	2013.06.03 09:50:10 +08'00'	APPROVED BY	2013.06.03 09:50:23 +08'00'	DATE	2012.03.08	PART NO	MR-3-230-R*-**N*	
1 2012.03.08	首次出圖	吳福濤									