VCOM LOW VOLTAGE 80℃ 30V COMPUTER CABLE (A group of white lettering)

REV	Change record	Change the date
A/0	Initial issue	2017-05-13

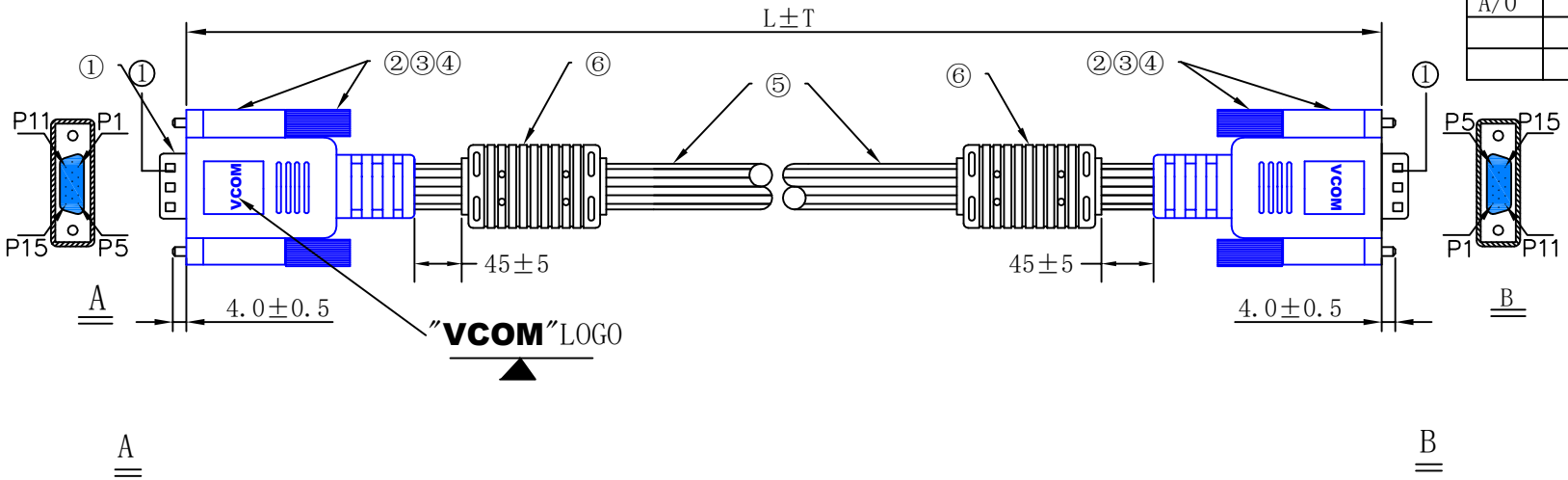

A

B

WIRING TABLE:

A	B
1	1
2	2
3	3
6+7+8 +11+G	6+7+8 +11+G
10	10
13	13
14	14
15	15

NO.	Cable length (L)	Cable tolerance (T)
1	1500MM	15MM
2	1800MM	20MM
3	3000MM	30MM
4	5000MM	50MM
5	10000MM	100MM
6		

Test Conditions:

1. 100% open & short circuit test;
2. Insulation Resistance: 2.0Mohm (MAX);
3. Conduction Resistance: 5ohm (MIN) at 300V DC/0.01S .

NO.	The material content	Stock NO.	unit	quantity	Mould NO.
⑥	FERRITE:φ9.5*17.5*28.5mm MOLDING CLOUR:BLACK		PCS		
⑤	CABLE:[(28AWG+SP)*3C+30AWG*4C+ABD,Black Jacket,OD:8.0mm "VCOM" LETTERING		M		
④	THUMB SCREW: φ4.0*32mm NICKEL PLATING,TAIL SHAPE BLUE PVC		PCS		
③	OVER MOLDING:45P PVC BlUE		g		
②	INNER MOLDING:LD PE		g		
①	HD15P MALE SOLDERING TYPE ,Blue PBT Insulator, NICKEL PLATING		PCS		

VCOM INTERNATIONAL LTD.

TITLE	HD15M/M+2*CORE	CUSTOMER		CUSTOMER	mm	PAGE:1of1
PART NO.	VC-F10-0004-A	CUSTOMER NO.		SCALE	
PRODUCT NO.	CG341AD	REV:	A/0	DATE	2017-05-13
APPROVED BY:		CHECKED BY:		DRAWN BY: CT	

VCOM LOW VOLTAGE 80℃ 30V COMPUTER CABLE (A group of white lettering)

REV	Change record	Change the date
A/0	Initial issue	2017-05-13

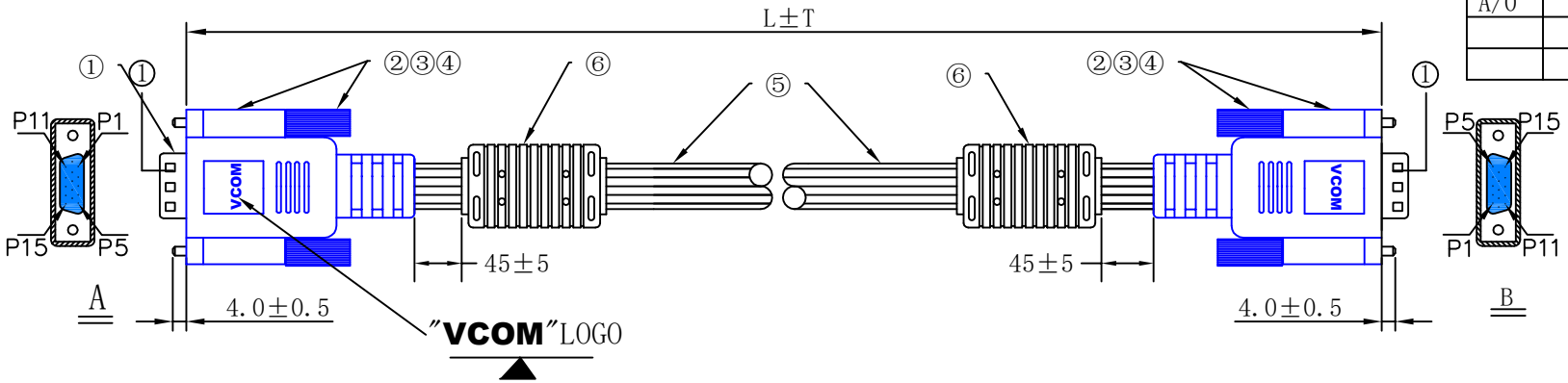

A

NO.	Cable length (L)	Cable tolerance (T)
1	15000MM	150MM
2	20000MM	200MM
3	25000MM	250MM
4	30000MM	300MM
5	35000MM	350MM

B

WIRING TABLE:

A	B
1	1
2	2
3	3
6+7+8 +11+G	6+7+8 +11+G
10	10
13	13
14	14
15	15

Test Conditions:

1. 100% open & short circuit test;
2. Insulation Resistance: 2.0Mohm (MAX);
3. Conduction Resistance: 5ohm (MIN) at 300V DC/0.01S .

NO.	The material content	Stock NO.	unit	quantity	Mould NO.
⑥	FERRITE:φ9.5*17.5*28.5mm MOLDING CLOUR:BLACK		PCS		
⑤	CABLE:[(28AWG+SP)*3C+28AWG*4C+ABD,Black Jacket,OD:8.0mm "VCOM" LETTERING		M		
④	THUMB SCREW: φ4.0*32mm NICKEL PLATING,TAIL SHAPE BLUE PVC		PCS		
③	OVER MOLDING:45P PVC BlUE		g		
②	INNER MOLDING:LD PE		g		
①	HD15P MALE SOLDERING TYPE ,Blue PBT Insulator, NICKEL PLATING		PCS		

VCOM INTERNATIONAL LTD.

TITLE	HD15M/M+2*CORE	CUSTOMER		CUSTOMER	mm	PAGE:1of1
PART NO.	VC-F10-0004-B	CUSTOMER NO.		SCALE	
PRODUCT NO.	CG341AD	REV:	A/0	DATE	2017-05-13
APPROVED BY:		CHECKED BY:		DRAWN BY: CT	

VCOM LOW VOLTAGE 80℃ 30V COMPUTER CABLE (A group of white lettering)

REV	Change record	Change the date
A/0	Initial issue	2017-05-13

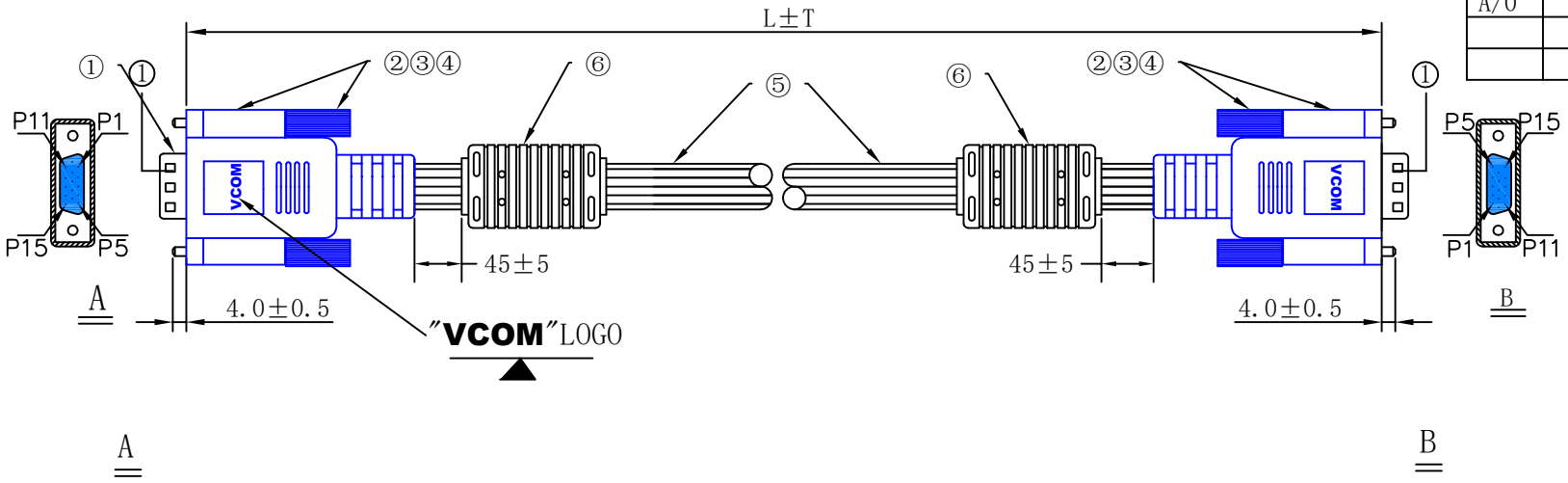

A

B

WIRING TABLE:

A	B
1	1
2	2
3	3
6+7+8 +11+G	6+7+8 +11+G
10	10
13	13
14	14
15	15

NO.	Cable length (L)	Cable tolerance (T)
1	40000MM	400MM
2	50000MM	500MM
3		

Test Conditions:

1. 100% open & short circuit test;
2. Insulation Resistance: 2.0Mohm (MAX);
3. Conduction Resistance: 5ohm (MIN) at 300V DC/0.01S .

NO.	The material content	Stock NO.	unit	quantity	Mould NO.
⑥	FERRITE:φ9.5*17.5*28.5mm MOLDING CLOUR:BLACK		PCS		
⑤	CABLE:[(28AWG+SP)*3C+26AWG*4C+ABD,Black Jacket,OD:8.0mm "VCOM" LETTERING		M		
④	THUMB SCREW: φ4.0*32mm NICKEL PLATING,TAIL SHAPE BLUE PVC		PCS		
③	OVER MOLDING:45P PVC BlUE		g		
②	INNER MOLDING:LD PE		g		
①	HD15P MALE SOLDERING TYPE ,Blue PBT Insulator, NICKEL PLATING		PCS		

VCOM INTERNATIONAL LTD.

TITLE	HD15M/M+2*CORE	CUSTOMER		CUSTOMER	mm	PAGE:1of1
PART NO.	VC-F10-0004-C	CUSTOMER NO.		SCALE	
PRODUCT NO.	CG341AD	REV:	A/0	DATE	2017-05-13
APPROVED BY:		CHECKED BY:		DRAWN BY: CT	