PRODUCT NO.
SEE TABLE

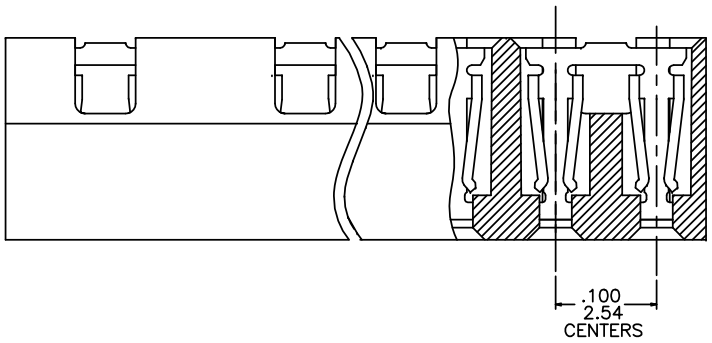

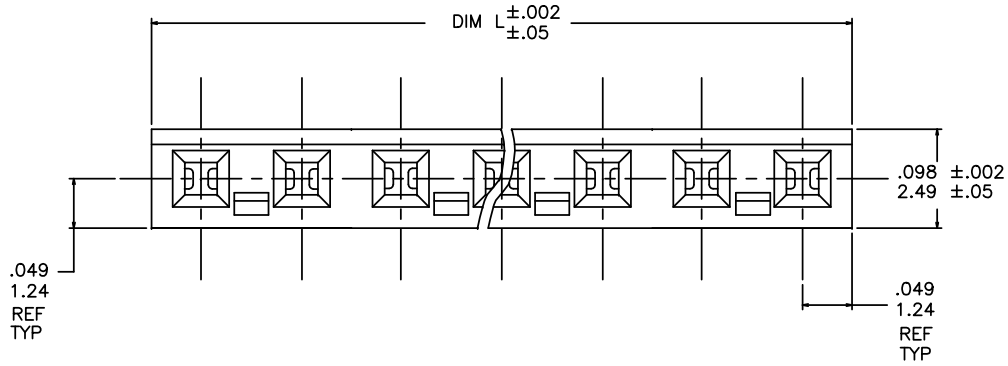

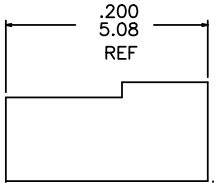

ltr	ecn	nodr	date
A	RELEASE	JGS	4/1/91
B	V11440	MRC	7/19/91
C	V80322	SAR	5/21/98
D	M05-0205	ERE	09/29/05
E	M06-0238	MN	06/17/06
F	M06-0389	AGS	10/4/06
G	ELX-N-011707	J.Z	2012-05-04

sheet index	revision	G	G
	sheet	1	2

mat'l. code

surface ISO 1302

tolerance ISO 406 ISO 1101

tolerances unless otherwise specified

angles 0°±2°

linear .XX±.01/.3 .XXX±.005/.13 .XXXX±.0020/.051

dr	J. SHREINER	4/1/91
engr	M.HAHN	4/1/91
chr	M.HAHN	4/1/91
appd	M.HAHN	4/1/91

projection

INCH/MM

scale 1:1

product family
JUMPER

title
S. R. MULTI POSITION
LOW PROFILE JUMPER ASS'Y

dwg no 69146 sheet 1 of 2 size A3

type Product Customer Drawing

form A3

FCIconnect.com
Copyright FCI

PRODUCT NO.	NO. OF POS.	DIM L	LEAD FREE OPTION
69146–X04	1 X 4	.398/10.11	NOTE 3,4
–X06	1 X 6	.598/15.19	
–X08	1 X 8	.798/20.27	
–X10	1 X 10	.998/25.35	
–X12	1 X 12	1.198/30.43	
–X14	1 X 14	1.398/35.51	
–X16	1 X 16	1.598/40.59	
–X18	1 X 18	1.798/45.67	
69146–X20	1 X 20	1.998/50.75	NOTE 3,4

XXXXX–XYYLF

BASE NUMBER

LEAD FREE OPTION

No. OF POSITIONS

PLATING CODE

NOTES:

1. MATERIAL; POLYESTER,FLAME RETARDANT PER UL–94–VO. COLOR – BLACK
2. RECOMMENDED APPLICATION DATA:
   A. ALL MATING PINS TO BE .025/.64 SQ.ON TRUE CENTER OF GIVEN TERMINAL SPACEING WITHIN .015/.38 DIA.
   B. SUGGESTED MATING PIN LENGTH .160/4.06 MIN.
3. ADD "LF" SUFFIX AT THE END OF PART NUMBER FOR LEAD FREE OPTION.
4. THESE PRODUCTS MEET EUROPEAN UNION DIRECTIVES AND OTHER COUNTRY REGULATIONS AS DESCRIBED IN GS–22–008.
5. THE PRODUCT IS NOT INTENDED TO BE EXPOSED TO A MANUFACTURING SOLDER PROCESS.
6. "THIS PRODUCT HAS 100% TIN PLATING IN THE INTERFACE AND HAS NOT BEEN TESTED FOR WHISKERS GROWTH IN ALL INTERCONNECT ENVIRONMENTS."
7. PRODUCT SPECIFICATION: BUS–12–071.

CONTACT PLATING:

–1XX 15µ"/0.38µ Au OR GXT OVER 50µ"/1.27µ Ni

–2XX 30µ"/0.76µ Au OR GXT OVER 50µ"/1.27µ Ni

–3XXLF 100µ"/2.54µ Sn OVER 50µ"/1.27µ Ni (NOTE 6)

~~–4XX Au FLASH OVER 50µ"/1.27 Ni in CONTACT AREA~~ – OBSOLETE

mat'l. code	surface ISO 1302	tolerance ISO 406 ISO 1101	projection	product family JUMPER	
ltr ecn no dr date	tolerances unless otherwise specified			title	
G	angles 0°±2°	linear .XX±.01/.3 .XXX±.005/.13 .XXXX±.0020/.051	INCH/MM scale 1:1	S. R. MULTI POSITION LOW PROFILE JUMPER ASS'Y	
	dr	J. SHREINER	4/1/91	dwg no 69146	sheet 2 of 2 size A3
	engr	M.HAHN	4/1/91		
	chr	M.HAHN	4/1/91		
	appd	M.HAHN	4/1/91	type Product Customer Drawing	
sheet index	revision sheet				

FCIconnect.com

Copyright FCI

form A3

PDS: Rev :G STATUS:Released Printed: May 24, 2012

Mouser Electronics

Authorized Distributor

Click to View Pricing, Inventory, Delivery & Lifecycle Information:

FCI / Amphenol:

69146-210 69146-212 69146-206LF 69146-204LF 69146-208LF 69146-210LF 69146-212LF 69146-208 69146-206 69146-204 69146-216 69146-214 69146-220 69146-218