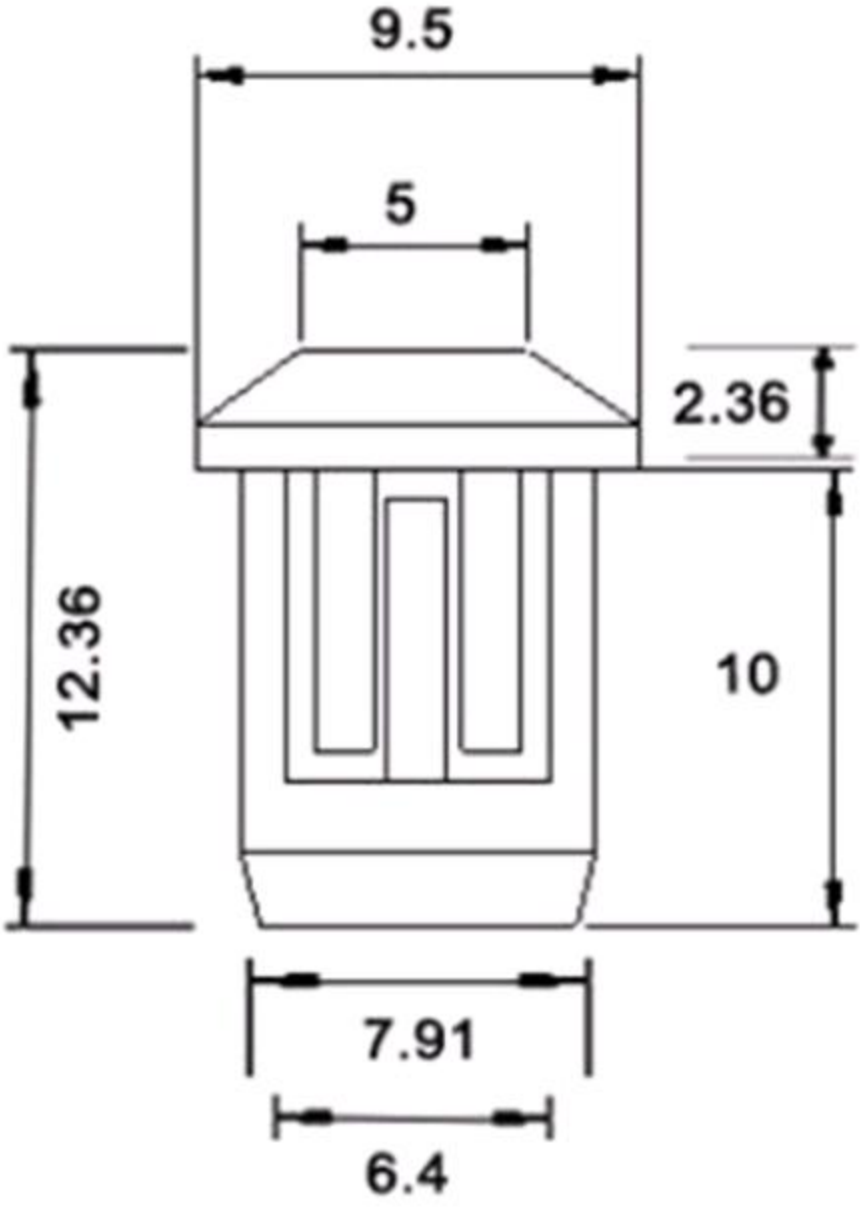
9.5
5
2.36
12.36
10
7.91
6.4