THIS DRAWING IS UNPUBLISHED. RELEASED FOR PUBLICATION 20
© COPYRIGHT 20 BY - ALL RIGHTS RESERVED.

LOC	DIST
FT	0

REVISIONS

P	LTR	DESCRIPTION	DATE	DWN	APVD
	P1	REVISED PER ECO-12-007714	25APR2012	KH	MS
	P2	STANDOFF DIMENSIONS OF 1mm SHOWN IN C4	11APR2016	FP	NG

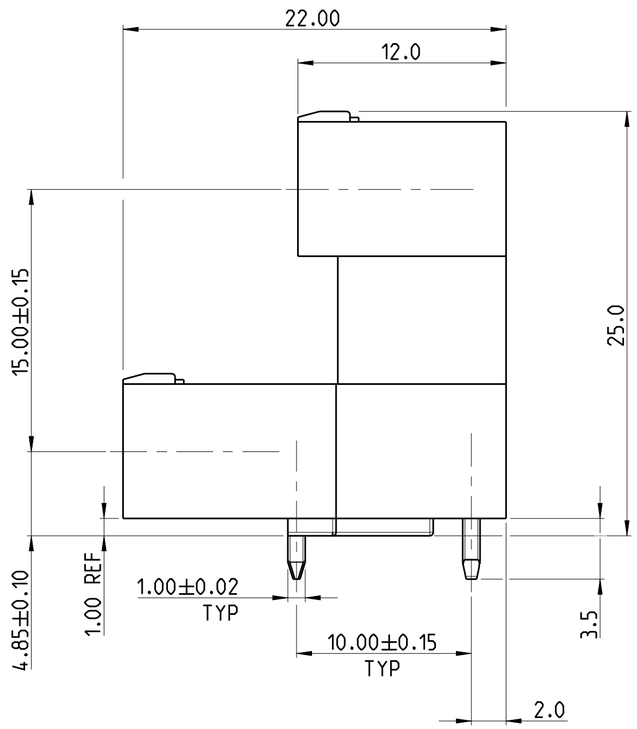

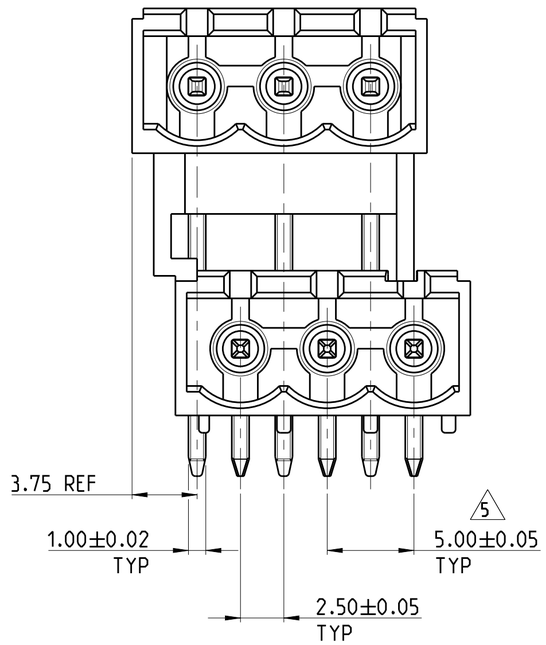

NOTES

1. MATERIALS AND FINISH
   HOUSING : HIGH TEMPERATURE POLYAMIDE, UL 94V-0 RATED, COLOR: BLACK.
   TERMINAL : COPPER ALLOY, TIN PLATED.

2. MECHANICAL
   MAX. INSERTION FORCE PER HOLE : 3N
   MIN. WITHDRAWAL FORCE PER HOLE : 1.5N
   PCB THICKNESS : MAX 2.4 mm

3. ELECTRICAL
   WIRE RANGE : 30 - 12 AWG
   MAX. VOLTAGE : 300 V
   MAX CURRENT : 15 A
   CONTACT RESISTANCE : < 15 m Ohm
   INSULATION RESISTANCE : > 1000 M Ohm (500V DC)

4. OPERATING TEMPERATURE RANGE: -40°C TO +110°C

5 TOLERANCE NOT CUMULATIVE.

6. P/Ns FROM 1776166-4 TO 1776166-8 ARE OBTAINED BY ASSEMBLING 1776166-2 AND 1776166-3 TO ACHIEVE THE DESIRED NUMBER OF POSITIONS.

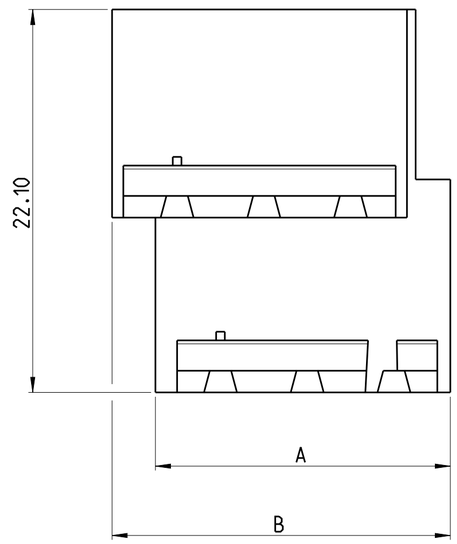

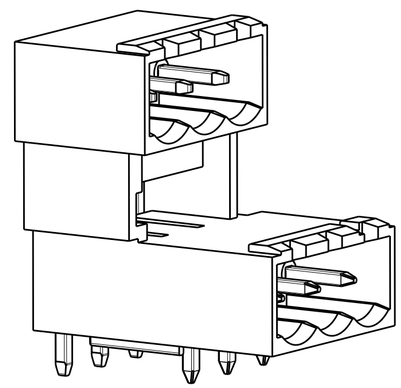

1776166-3 AS SHOWN

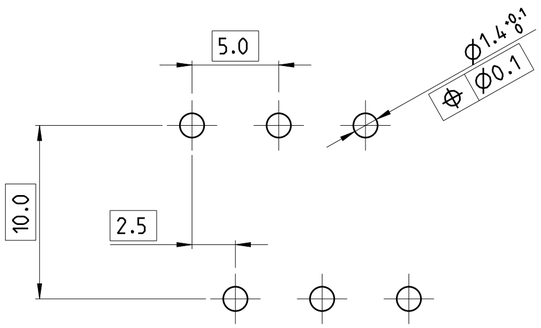

RECOMMENDED PC BOARD LAYOUT

B	A	NO OF POSN	PART NUMBER
44.5	42.0	8	1776166-8
39.5	37.0	7	1776166-7
34.5	32.0	6	1776166-6
29.5	27.0	5	1776166-5
24.5	22.0	4	1776166-4
19.5	17.0	3	1776166-3
14.5	12.0	2	1776166-2

THIS DRAWING IS A CONTROLLED DOCUMENT.

DIMENSIONS: mm

TOLERANCES UNLESS OTHERWISE SPECIFIED:
0 PLC ±
1 PLC ±0.3
2 PLC ±0.25
3 PLC ±
4 PLC ±
ANGLES ±2°

MATERIAL: SEE NOTES
FINISH: SEE NOTES

DWN S.WELDON 19JUL2005
CHK C.RICHARD 19JUL2005
APVD C.RICHARD 19JUL2005
PRODUCT SPEC -
APPLICATION SPEC -
WEIGHT -

TE Connectivity

NAME: TERMINAL BLOCK HEADER ASSEMBLY, MULTIPLE, 90 DEGREE, CLOSED ENDS, 5.00mm PITCH

SIZE	CAGE CODE	DRAWING NO	RESTRICTED TO
A2	00779	C-1776166	-

CUSTOMER DRAWING | SCALE 4:1 | SHEET 1 OF 1 | REV P2

1471-9 (3/11)

Mouser Electronics

Authorized Distributor

Click to View Pricing, Inventory, Delivery & Lifecycle Information:

TE Connectivity:

1776166-6