PRODUCT NO.	ROWS	POWER			SIGNAL				
		E1	P1	P2	1	2	3	4	E2
51939-483__ NOTE 3	D C B A	HA	PA	PA	U T S R	X X X X	U T S R	U T S R	HA

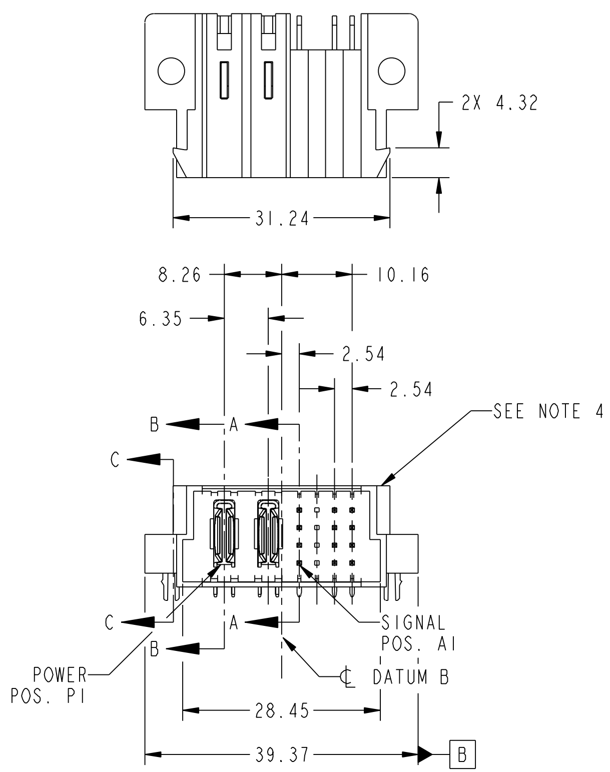

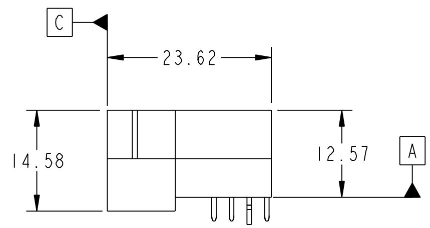

CODE	DIM "M" MATING LENGTH	CONTACT TYPE
X	OMITTED	OMITTED
U	[6.86]	SIGNAL
T	[6.86]	SIGNAL
S	[6.86]	SIGNAL
R	[6.86]	SIGNAL
PA	[N/A]	POWER
HA	[N/A]	HOLD-DOWN

mat'l code

SEE NOTE

ltr	ecn no.	dr	date
A	DG09-0362	WL	11/22/09

tolerances unless otherwise specified

linear	0.X ±0.5
	0.XX ±0.25
	0.XXX ±0.1
angles	0° ±2°
dr	WL ZHANG 10/27/09
engr	JEROME CHEN 10/27/09
chr	PM ZHENG 10/27/09
appd	JOSEPH HSIA 10/27/09

sheet index				
revision	A	A	A	A
sheet	1	2	3	4

CUSTOMER COPY

projection

MM

scale 1:1

FCI

www.fciconnect.com

title 2P + 16S RIGHT ANGLE SOLDER HEADER

product family PwrBlade

code 213

size A

dwg no 51939-483

sheet 1 of 4

cage code 22526

Pro/E

Tous droits strictement reserves. Reproduction ou communication a des tiers interdite sous quelque forme que ce soit sans autorisation ecrite du propietaire. Propriete de c FCI. Droits de reproduction FCI.

All rights strictly reserved. Reproduction or issue to third parties in any form whatever is not permitted without written authority from the proprietor. Property of FCI. Copyright FCI.

PDM: Rev:A STATUS:Released Printed: Dec 20, 2010

Downloaded from Arrow.com.

PRODUCT NUMBER
51939-483__
NOTE: 3

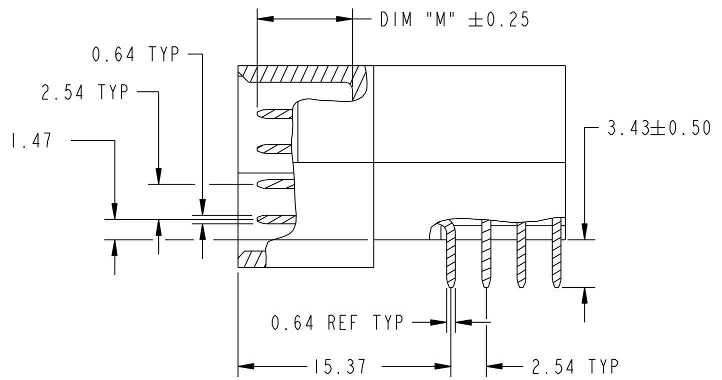

BROKEN-OUT SECTION A-A
SCALE 2:1

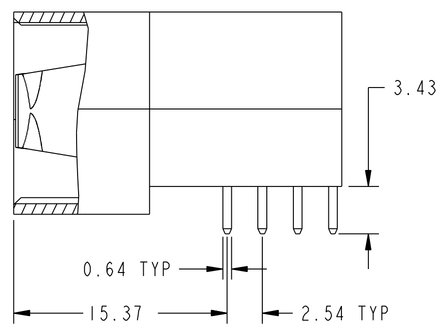

BROKEN-OUT SECTION B-B
SCALE 2:1

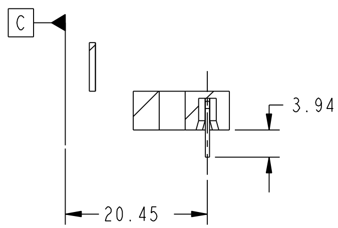

SECTION C-C

mat'l code	SEE NOTE
ltr / ecn no. / dr / date	A
tolerances unless otherwise specified	linear: 0.X ±0.5; 0.XX ±0.25; 0.XXX ±0.1; angles: 0° ±2°
dr	WL ZHANG 10/27/09
engr	JEROME CHEN 10/27/09
chr	PM ZHENG 10/27/09
appd	JOSEPH HSIA 10/27/09
CUSTOMER	COPY
projection	
units	MM
scale	1:1
title	2P + 16S RIGHT ANGLE SOLDER HEADER
product family	PwrBlade
code	213
size	A
dwg no	51939-483
sheet	2 of 4
cage code	22526
sheet index / revision sheet	

FCI www.fciconnect.com

Pro/E

Tous droits strictement reserves. Reproduction ou communication a des tiers interdite sous quelque forme que ce soit sans autorisation ecrite du propietaire. Propriete de c FCI. Droits de reproduction FCI.

All rights strictly reserved. Reproduction or issue to third parties in any form whatever is not permitted without written authority from the proprietor. Property of FCI. Copyright FCI.

PDM: Rev:A STATUS: Released Printed: Dec 20, 2010

Downloaded from Arrow.com.

PRODUCT NUMBER

51939-483__
NOTE: 3

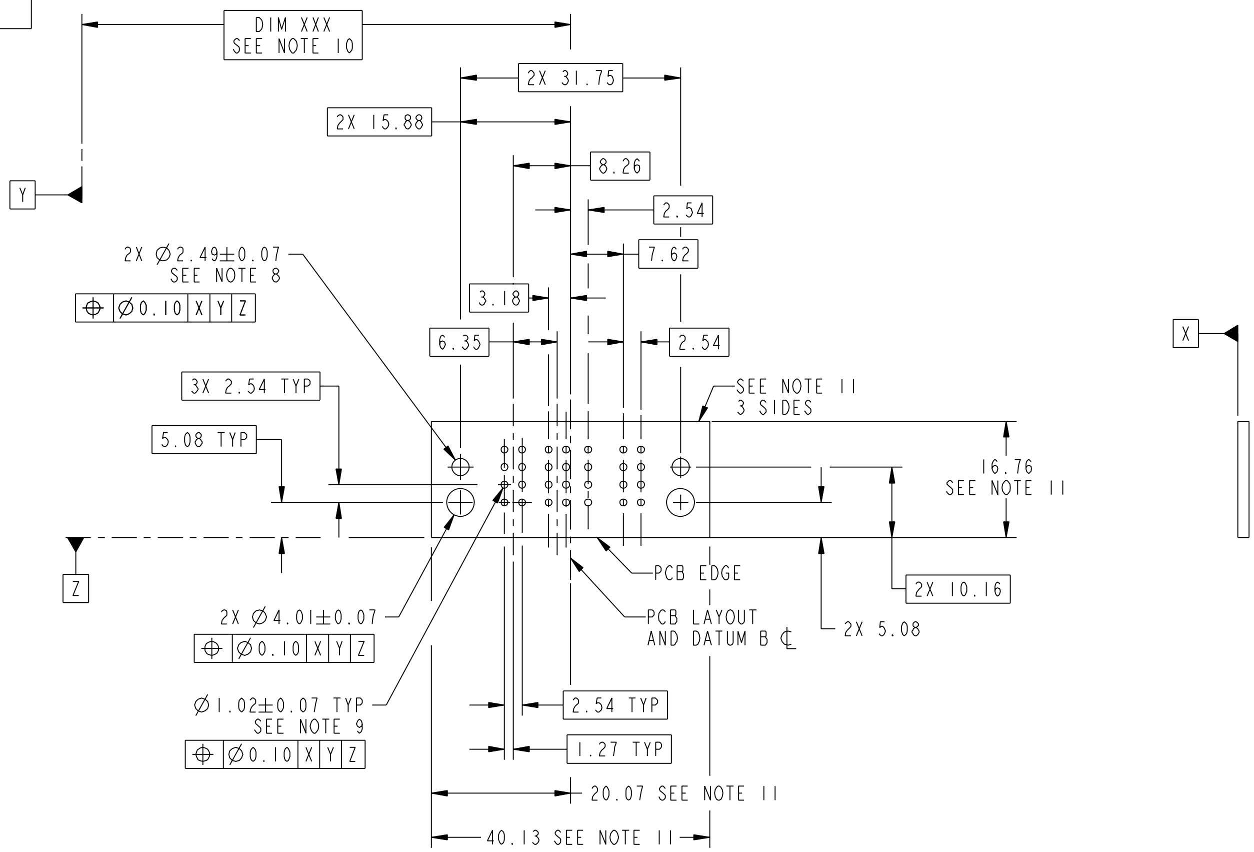

RECOMMENDED PCB LAYOUT

mat'l code	SEE NOTE			tolerances unless otherwise specified			CUSTOMER COPY
ltr	ecn no.	dr	date	linear	0.X ±0.5		projection
A					0.XX ±0.25		
					0.XXX ±0.1		
				angles	0° ±2°		
				dr	WL ZHANG	10/27/09	MM
				engr	JEROME CHEN	10/27/09	
				chr	PM ZHENG	10/27/09	scale
				appd	JOSEPH HSIA	10/27/09	1:1
sheet index	revision sheet						

FCI www.fciconnect.com

title: 2P + 16S RIGHT ANGLE SOLDER HEADER

product family: PwrBlade — code: 213

size: A — dwg no: 51939-483 — sheet: 3 of 4

cage code: 22526

Pro/E

All rights strictly reserved. Reproduction or issue to third parties in any form whatever is not permitted without written authority from the proprietor. Property of FCI. Copyright FCI.

Tous droits strictement reserves. Reproduction ou communication a des tiers interdite sous quelque forme que ce soit sans autorisation ecrite du propietaire. Propriete de c FCI. Droits de reproduction FCI.

PDM: Rev:A STATUS:Released Printed: Dec 20, 2010

Downloaded from Arrow.com.

Downloaded from Arrow.com.

Tous droits strictement reserves. Reproduction ou communication a des tiers interdite sous quelque forme que ce soit sans autorisation ecrite du proprietaire. Propriete de c FCI. Droits de reproduction FCI.

All rights strictly reserved. Reproduction or issue to third parties in any form whatever is not permitted without written authority from the proprietor. Property of FCI. Copyright FCI.

PRODUCT NUMBER
51939-483__ NOTE: 3

NOTES:

1. DIMENSIONS AND TOLERANCES ARE IN ACCORDANCE WITH ASME Y14.5M, 1994 UNLESS OTHERWISE SPECIFIED.

CONNECTOR NOTES:

(2.) HOUSING MATERIAL: UL 94 V-0 GLASS FILLED
HIGH-TEMP THERMOPLASTIC
POWER CONTACT MATERIAL: COPPER ALLOY
SIGNAL PIN MATERIAL: COPPER ALLOY

3. PLATING SPEC.
SEE ITEM 1 & 2 IN PRINT 10064183 FOR PLATING SPEC OF 51939-483; 51939-483LF PRESPECTIVELY

(4.) MANUFACTURER'S NAME, DATE CODE AND OPTIONAL P/N TO APPEAR ON THIS SURFACE.
THE P/N CAN BE OMITTED IF THERE IS NOT ENOUGH SPACE ON THIS SURFACE.

5. PRODUCT SPECIFICATION GS-12-149.
APPLICATION SPECIFICATION BUS-20-067.

6. PACKAGED IN TRAYS.

PCB NOTES:

7. ALL HOLE DIAMETERS ARE FINISHED HOLE SIZE.

(8.) MOUNTING HOLES, WHERE APPLICABLE, ARE UNPLATED.

(9.) Ø1.151±0.025 DRILLED HOLES PLATED WITH
0.008 MIN SnPb OR Sn OVER 0.03
TO 0.08 Cu PLATING TO ACHIEVE
Ø1.02±.07 HOLE.

(10.) "DIM XXX" TO BE DETERMINED BY THE CUSTOMER.

(11.) CONNECTOR KEEP-OUT ZONE.

mat'l code	SEE NOTE

ltr	ecn no.	dr	date
A			

sheet	revision
index	sheet

tolerances unless otherwise specified		
linear	0.X ±0.5	
	0.XX ±0.25	
	0.XXX ±0.1	
angles	0° ±2°	
dr	WL ZHANG	10/27/09
engr	JEROME CHEN	10/27/09
chr	PM ZHENG	10/27/09
appd	JOSEPH HSIA	10/27/09

CUSTOMER
COPY

projection

MM

scale 1:1

www.fciconnect.com

title
2P + 16S
RIGHT ANGLE SOLDER HEADER

product family PwrBlade
code 213
size A
dwg no 51939-483
sheet 4 of 4

cage code 22526

Pro/E

PDM: Rev:A STATUS:Released Printed: Dec 20, 2010