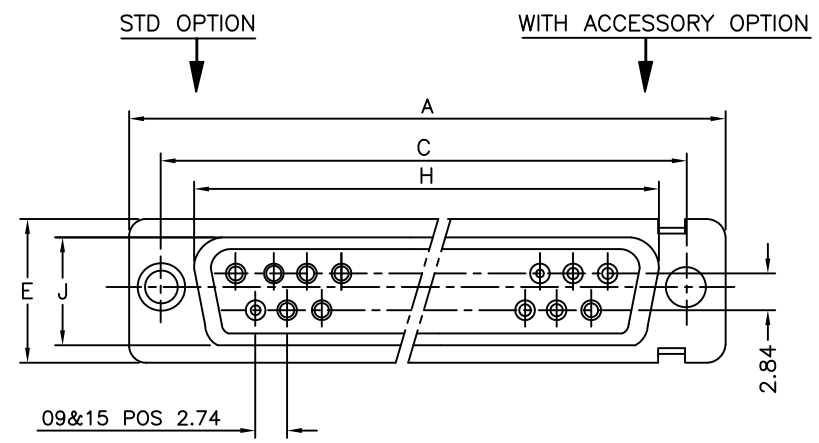

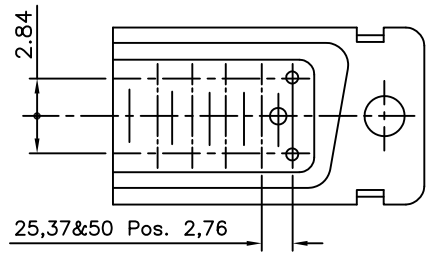

LAY OUT OF 50P CONNECTOR

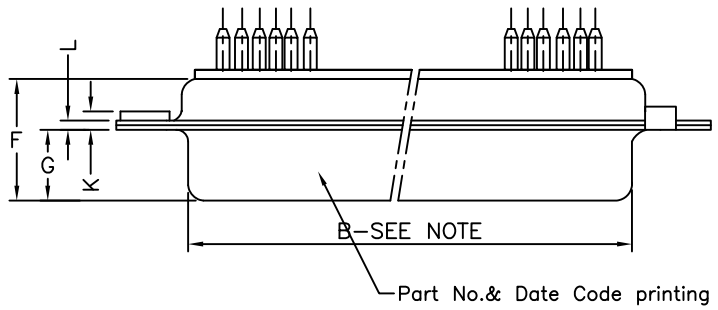

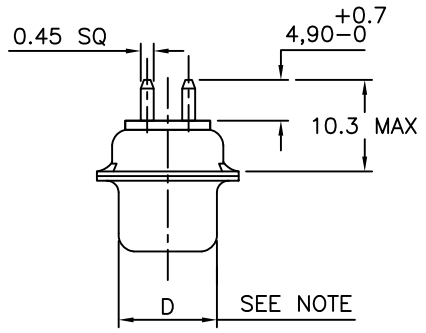

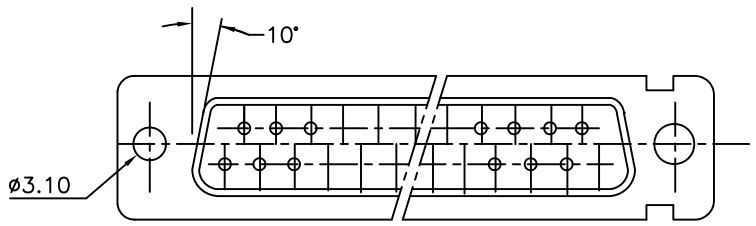

VIEW OF MATING FACE

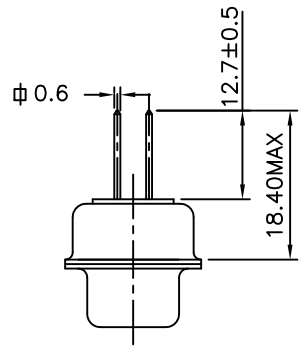

WIRE WRAP CODE 4

EXTENDED FEMALE SCREW LOCK WITH SPACER

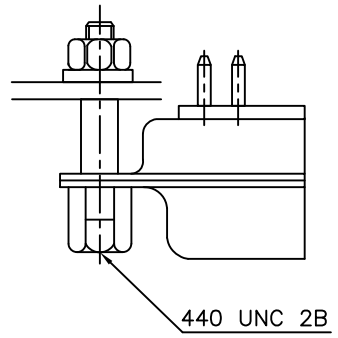

ORD CODE –8630–01–062

SPACERS RIVETTED TO SHELL

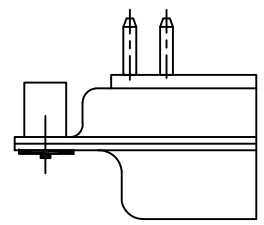

PREFIX:– S

MALE SCREW LOCK

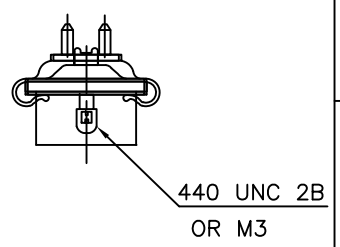

ORD CODE:–
8630– 05(E.A.B.C.)
8630–03 D SHELL FEMALE
8630–15 D SHELL MALE
8630–04 E,A,B,C SHELL
WITH METAL HOOD

FOR 440 UNC 2A THREADED ADD UNC TO THE CORRESPONDING ORD. CODE.

SHELL SIZE		A $^{+0.76}_{0}$	B $^{+0.25}_{0}$	C $^{\pm0.12}$	D $^{+0.25}_{0}$	E $^{+0.76}_{0}$	F MAX	G $^{+0.15}_{0}$	H $^{+0.51}_{0}$	J $^{+0.51}_{0}$	K $^{\pm0.2}$	L $^{+0.22}_{0}$
		DIMENSIONS										
50	P	66.65	52.68	61.11	11.08	14.99	11.09	5.85	55.07	13.31	1.50	1.0
	S	66.65	52.30	61.11	10.62	14.99	11.21	6.05	55.07	13.31	1.10	0.8
37	P	68.94	55.30	63.50	8.23	12.17	11.09	5.85	57.45	10.46	1.50	1.0
	S	68.94	54.71	63.50	7.77	12.17	11.21	6.05	57.45	10.46	1.10	0.8
25	P	52.65	38.84	47.04	8.23	12.17	11.07	5.85	41.02	10.46	1.10	0.8
	S	52.65	38.25	47.04	7.77	12.17	11.21	6.05	41.02	10.46	1.10	0.8
15	P	38.76	25.12	33.32	8.23	12.17	10.99	5.85	27.25	10.46	1.10	0.8
	S	38.76	24.54	33.32	7.77	12.17	11.21	6.05	27.25	10.46	1.10	0.8
09	P	30.43	16.79	24.99	8.23	12.17	10.99	5.85	19.02	10.46	1.10	0.8
	S	30.43	16.21	24.99	7.77	12.17	11.21	6.05	19.02	10.46	1.10	0.8

NOTE: INSIDE DIMENSION OF MALE AND OUTSIDE DIMENSION OF THE FEMALE CONNETOR

TECHNICAL SPECIFICATIONS

SHELLS	: TIN/ZINC PLATED STEEL
CONTACTS DIA ON ACTIVE AREA	: ø1 MM.
CONTACTS MATERIAL	: COPPER ALLOY
CONTACT PLATING	: GXT / GOLD OVER NICKEL (ACTIVE ZONE) TIN OVER NICKEL (TERMINATION ZONE)
FOR LEAD FREE PLATING	: 2μ MIN. TIN TOP OVER 1.27μ MIN.NICKEL UNDER PLATE(ON TERMINATION ZONE)
INSULATOR MATERIAL	: SELF EXTINGUISHING THERMOPLASTIC– TO UL CLASS 94 V0 THE HOUSING WILL WITHSTAND EXPOSURE TO 260–265°C IF WE USE PROTECTIVE ADHESIVE (type Kapton or Teflon) OR PROTECTIVE METALLIC DEVICE
OPERATING TEMPERATURE	: –55°C +125°C
OPERATING CURRENT	: 5 A PER CONTACT
CONTACT RESISTANCE	: ⩽10m Ω
INSULATION RESISTANCE	: ⩾5000 M Ω
MAXIMUM VOLTAGE	: 1000 V.r.m.s
MECHANICAL ENDURANCE	: 500 MATINGS FOR CODE 64 200 MATINGS FOR CODE 65
DAMP HEAT	: 56 DAYS FOR ⩾0.75μ GOLD PLATING 21 DAYS FOR ⩽0.40μ GOLD PLATING

CLINCH NUT

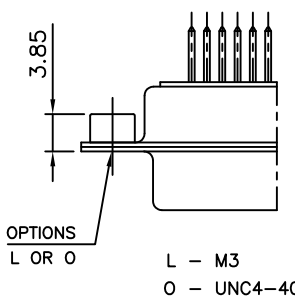

HEXAGONAL FEMALE SCREW

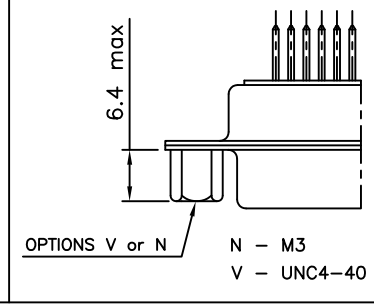

HARPOON RIVETTED TO SHELL

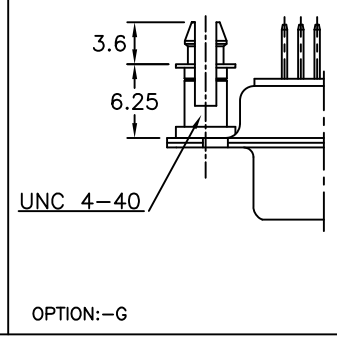

HARPOON PRESS FITTED TO SHELL

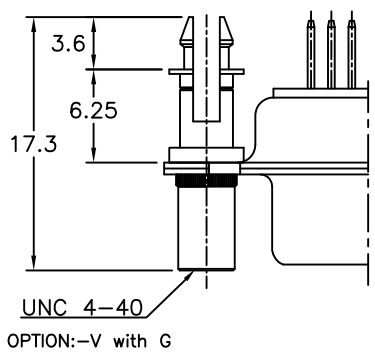

ORDERING INFORMATION

D B V 25 P 3 64 G T X XXX LF

- SERIES
- SHELL SIZE: E,A,B,C,D
- PANEL MOUNTING OPTIONS: BLANK–STANDARD; V–FEM. SCREW LOCK (UNC); N–FEM. SCREW LOCK M3; S–SPACER RIVETTED TO SHELL; L–CLINCH NUT (M3); O–CLINCH NUT (UNC)
- NO.OF CONTACTS: 09,15,25,37,50
- CONTACTS: P – PIN; S – SOCKET
- TERMINATION TYPE: 3–STRAIGHT SPILL; 4–WIRE WRAP
- LEAD FREE
- SPECIAL CODES
- DIMPLES: X–ON MALE CONNECTORS ONLY
- SHELL PLATING: BLANK–ZINC (Cr+3); T–STD. TIN Over Cu
- PCB MOUNTING OPTIONS: BLANK–STANDARD; G–HARPOON
- CONTACT PLATING: 64 – 200 MATING CYCLES; 65 – 500 MATING CYCLES

"This LF product meets European Union Directives and other country regulations as described in GS–22–008"

The housing will withstand exposure to 260°C peak temperature for 3.5 seconds in a wave solder application with a 1.6mm minimum thick circuit board.

Packaging as per GS–14–920

mat'l. code				surface		tolerance		projection	product family
SEE NOTE 4				ISO 1302		ISO 406 ISO 1101			
ltr	ecn no	dr	date	tolerances unless otherwise specified					title
D	I06–0074	GVJ	2006/06/08	angles	linear			MM	D- SUB S/S W/W CONNECTOR
E	I09–0179	AMR	2009/09/04						(WITH ASSEMBLY OPTIONS)
F	I09–0195	AMR	2009/09/04					scale –	
G	I11–0003	AMR	2011/01/06	dr	Mini K Vandanath	1999/03/20			dwg no C-DSUB-0065
H	I11–0047	AMR	2011/03/05	engr	George V Joseph	1999/03/20			sheet 1 of 1
				chr	Abhilash M R	2009/09/04			size A3
				appd	Sudhir Varma	2009/09/04			type Product Customer Drawing
sheet index	revision	H							
	sheet	1							

form: A3

PDM: Rev:H STATUS:Released Printed: Mar 06, 2011

FCIconnect.com
Copyright FCI
Downloaded from Arrow.com