MCP1703

250 mA, 16V, Low Quiescent Current

Features

- 2.0 µA Typical Quiescent Current
- Input Operating Voltage Range: 2.7V to16.0V
- 250 mA Output Current for Output Voltages ≥ 2.5V
- 200 mA Output Current for Output Voltages < 2.5V
- Low Drop Out Voltage, 625 mV typical @ 250 mA for V_R = 2.8V
- 0.4% Typical Output Voltage Tolerance
- Standard Output Voltage Options (1.2V, 1.5V, 1.8V, 2.5V, 2.8V, 3.0V, 3.3V, 4.0V, 5.0V)
- Output voltage range 1.2V to 5.5V in 0.1V increments (50 mV increments available upon request)
- Stable with 1.0 µF to 22 µF output capacitance
- Short-Circuit Protection
- Overtemperature Protection

Applications

- Battery-powered Devices
- Battery-powered Alarm Circuits
- Smoke Detectors
- CO^2 Detectors
- Pagers and Cellular Phones
- Smart Battery Packs
- Low Quiescent Current Voltage Reference
- PDAs
- Digital Cameras
- Microcontroller Power
- Solar-Powered Instruments
- Consumer Products
- Battery Powered Data Loggers

Description

The MCP1703 is a family of CMOS low dropout (LDO) voltage regulators that can deliver up to 250 mA of current while consuming only 2.0 µA of quiescent current (typical). The input operating range is specified from 2.7V to 16.0V, making it an ideal choice for two to six primary cell battery-powered applications, 9V alkaline and one or two cell Li-Ion-powered applications.

The MCP1703 is capable of delivering 250 mA with only 625 mV (typical) of input to output voltage differential (V_{OUT} = 2.8V). The output voltage tolerance of the MCP1703 is typically ±0.4% at +25°C and ±3% maximum over the operating junction temperature range of -40°C to +125°C. Line regulation is ±0.1% typical at +25°C.

Output voltages available for the MCP1703 range from 1.2V to 5.5V. The LDO output is stable when using only 1 µF of output capacitance. Ceramic, tantalum or aluminum electrolytic capacitors can all be used for input and output. Overcurrent limit and overtemperature shutdown provide a robust solution for any application.

Package options include the SOT-223-3, SOT-23A, and SOT-89-3.

Related Literature

- AN765, “Using Microchip’s Micropower LDOs”, DS00765, Microchip Technology Inc., 2002
- AN766, “Pin-Compatible CMOS Upgrades to BiPolar LDOs”, DS00766, Microchip Technology Inc., 2002
- AN792, “A Method to Determine How Much Power a SOT23 Can Dissipate in an Application”, DS00792, Microchip Technology Inc., 2001

Package Types

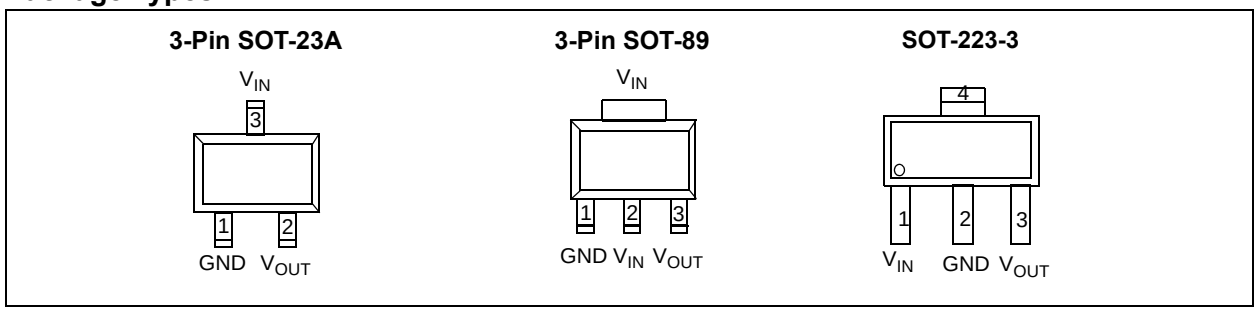

Functional Block Diagrams

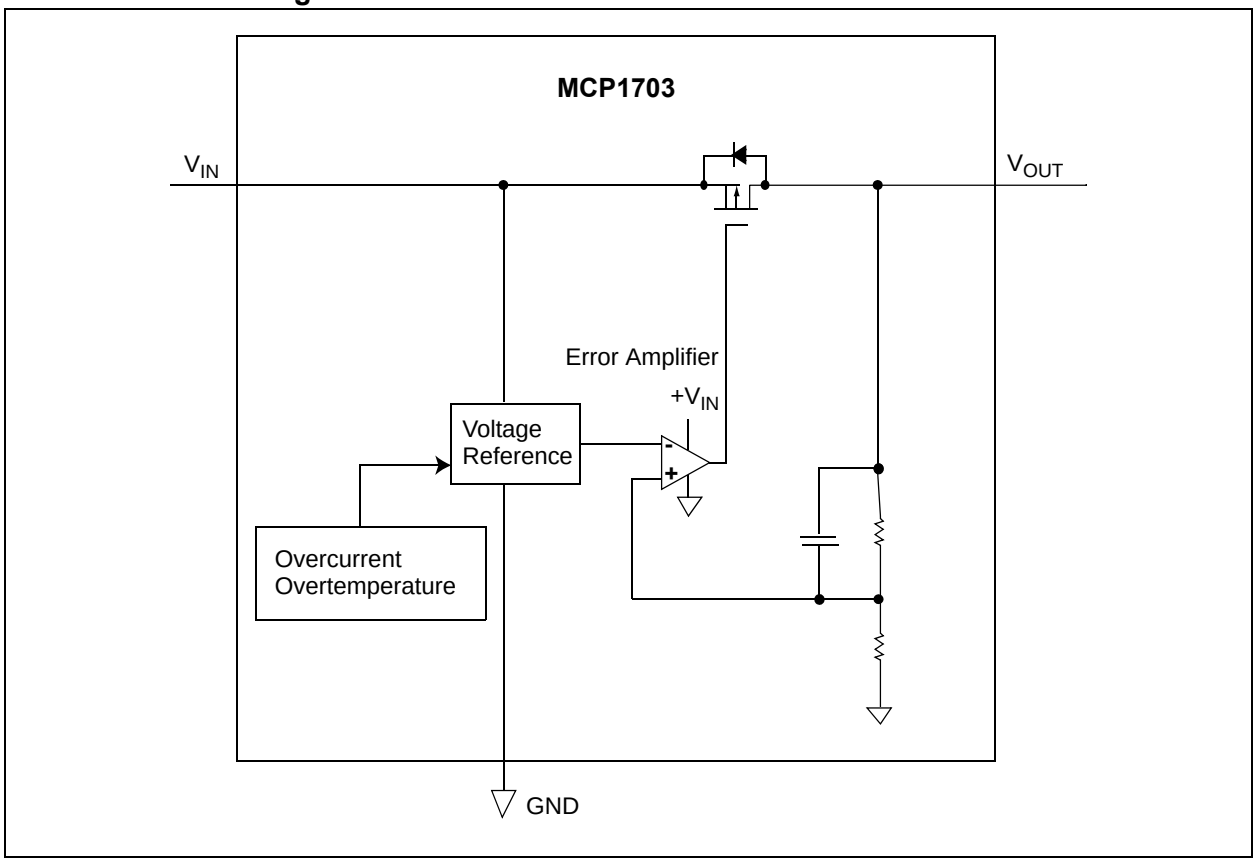

Typical Application Circuits

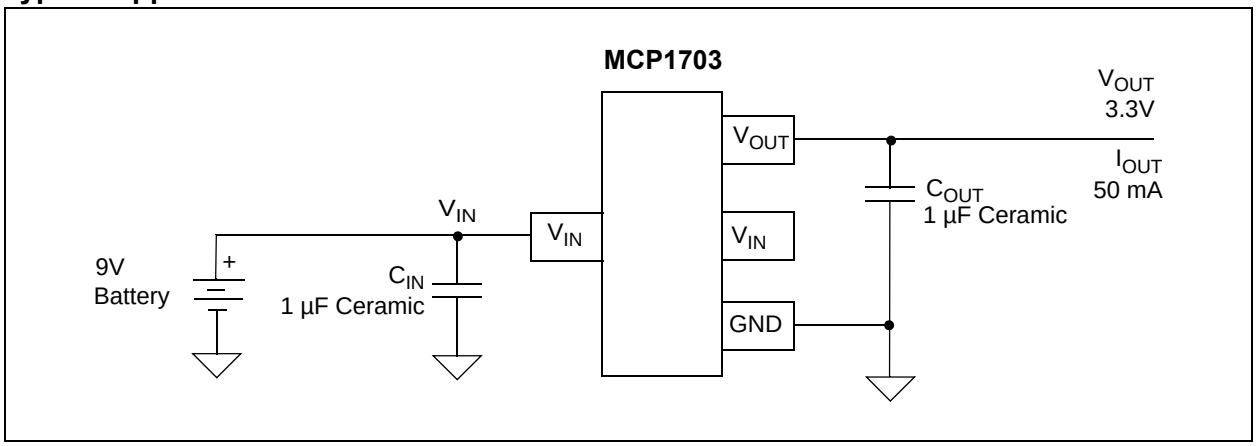

© 2007 Microchip Technology Inc.

1.0 ELECTRICAL CHARACTERISTICS

Absolute Maximum Ratings †

V_{DD}.....+18V

All inputs and outputs w.r.t. .....(V_{SS}-0.3V) to (V_{IN}+0.3V)

Peak Output Current.....500 mA

Storage temperature .....-65°C to +150°C

Maximum Junction Temperature.....+150°C

Operating Junction Temperature.....-40°C to +125°C

ESD protection on all pins (HBM;MM).....≥ 4 kV; ≥ 400V

† Notice: Stresses above those listed under “Maximum Ratings” may cause permanent damage to the device. This is a stress rating only and functional operation of the device at those or any other conditions above those indicated in the operational listings of this specification is not implied. Exposure to maximum rating conditions for extended periods may affect device reliability.

DC CHARACTERISTICS

Electrical Specifications: Unless otherwise specified, all limits are established for $V_{IN} = V_{OUT(MAX)} + V_{DROPOUT(MAX)}$, **Note 1**, I_{LOAD} = 100 µA, C_{OUT} = 1 µF (X7R), C_{IN} = 1 µF (X7R), T_A = +25°C.
Boldface type applies for junction temperatures, T_J **(Note 7)** of -40°C to +125°C.

Parameters	Symbol	Min	Typ	Max	Units	Conditions
Input / Output Characteristics						
Input Operating Voltage	V_{IN}	**2.7**	—	**16.0**	V	**Note 1**
Input Quiescent Current	I_q	—	2.0	**5**	µA	I_L = 0 mA
Maximum Output Current	I_{OUT_mA}	**250**	—	—	mA	For $V_R \geq 2.5V$
		50	100	—	mA	For $V_R < 2.5V$, $V_{IN} \geq 2.7V$
		100	130	—	mA	For $V_R < 2.5V$, $V_{IN} \geq 2.95V$
		150	200	—	mA	For $V_R < 2.5V$, $V_{IN} \geq 3.2V$
		200	250	—	mA	For $V_R < 2.5V$, $V_{IN} \geq 3.45V$
Output Short Circuit Current	I_{OUT_SC}	—	400	—	mA	$V_{IN} = V_{IN(MIN)}$ (**Note 1**), V_{OUT} = GND, Current (average current) measured 10 ms after short is applied.
Output Voltage Regulation	V_{OUT}	**V_R-3.0%** V_R-2.0%	V_R±0.4 %	**V_R+3.0%** V_R+2.0%	V	**Note 2**
V_{OUT} Temperature Coefficient	TCV_{OUT}	—	50	**150**	ppm/°C	**Note 3**
Line Regulation	$\Delta V_{OUT}/(V_{OUT} X \Delta V_{IN})$	**-0.3**	±0.1	**+0.3**	%/V	$(V_{OUT(MAX)} + V_{DROPOUT(MAX)}) \leq V_{IN} \leq 16V$, **Note 1**
Load Regulation	$\Delta V_{OUT}/V_{OUT}$	**-2.5**	±1.0	**+2.5**	%	I_L = 1.0 mA to 250 mA for V_R >= 2.5V I_L = 1.0 mA to 200 mA for V_R < 2.5V V_{IN} = 3.65V, **Note 4**

Note 1: The minimum V_{IN} must meet two conditions: $V_{IN} \geq 2.7V$ and $V_{IN} \geq (V_{OUT(MAX)} + V_{DROPOUT(MAX)})$.

2: V_R is the nominal regulator output voltage. For example: V_R = 1.2V, 1.5V, 1.8V, 2.5V, 2.8V, 3.0V, 3.3V, 4.0V, or 5.0V. The input voltage $V_{IN} = V_{OUT(MAX)} + V_{DROPOUT(MAX)}$ or Vi_{IN} = 2.7V (whichever is greater); I_{OUT} = 100 µA.

3: $TCV_{OUT} = (V_{OUT-HIGH} - V_{OUT-LOW}) *10^6 / (V_R * \Delta Temperature)$, $V_{OUT-HIGH}$ = highest voltage measured over the temperature range. $V_{OUT-LOW}$ = lowest voltage measured over the temperature range.

4: Load regulation is measured at a constant junction temperature using low duty cycle pulse testing. Changes in output voltage due to heating effects are determined using thermal regulation specification TCV_{OUT}.

5: Dropout voltage is defined as the input to output differential at which the output voltage drops 2% below its measured value with an applied input voltage of $V_{OUT(MAX)} + V_{DROPOUT(MAX)}$ or 2.7V, whichever is greater.

6: The maximum allowable power dissipation is a function of ambient temperature, the maximum allowable junction temperature and the thermal resistance from junction to air (i.e., T_A, T_J, θ_{JA}). Exceeding the maximum allowable power dissipation will cause the device operating junction temperature to exceed the maximum 150°C rating. Sustained junction temperatures above 150°C can impact the device reliability.

7: The junction temperature is approximated by soaking the device under test at an ambient temperature equal to the desired Junction temperature. The test time is small enough such that the rise in the Junction temperature over the ambient temperature is not significant.

DC CHARACTERISTICS (CONTINUED)

Electrical Specifications: Unless otherwise specified, all limits are established for $V_{IN} = V_{OUT(MAX)} + V_{DROPOUT(MAX)}$, **Note 1**, I_{LOAD} = 100 µA, C_{OUT} = 1 µF (X7R), C_{IN} = 1 µF (X7R), T_A = +25°C.
Boldface type applies for junction temperatures, T_J **(Note 7)** of -40°C to +125°C.

Parameters	Symbol	Min	Typ	Max	Units	Conditions
Dropout Voltage **Note 1**, **Note 5**	$V_{DROPOUT}$	—	330	**650**	mV	I_L = 250 mA, V_R = 5.0V
		—	525	**725**	mV	I_L = 250 mA, 3.3V ≤ V_R < 5.0V
		—	625	**975**	mV	I_L = 250 mA, 2.8V ≤ V_R < 3.3V
		—	750	**1100**	mV	I_L = 250 mA, 2.5V ≤ V_R < 2.8V
		—	—	—	mV	V_R < 2.5V, See Maximum Output Current Parameter
Output Delay Time	T_{DELAY}	—	1000	—	µs	V_{IN} = 0V to 6V, V_{OUT} = 90% V_R, R_L = 50Ω resistive
Output Noise	e_N	—	8		µV/(Hz)$^{1/2}$	I_L = 50 mA, f = 1 kHz, C_{OUT} = 1 µF
Power Supply Ripple Rejection Ratio	PSRR	—	44	—	dB	f = 100 Hz, C_{OUT} = 1 µF, I_L = 100 µA, V_{INAC} = 100 mV pk-pk, C_{IN} = 0 µF, V_R = 1.2V
Thermal Shutdown Protection	T_{SD}	—	150	—	°C	

Note 1: The minimum V_{IN} must meet two conditions: $V_{IN} \geq 2.7V$ and $V_{IN} \geq (V_{OUT(MAX)} + V_{DROPOUT(MAX)})$.

2: V_R is the nominal regulator output voltage. For example: V_R = 1.2V, 1.5V, 1.8V, 2.5V, 2.8V, 3.0V, 3.3V, 4.0V, or 5.0V. The input voltage $V_{IN} = V_{OUT(MAX)} + V_{DROPOUT(MAX)}$ or Vi_{IN} = 2.7V (whichever is greater); I_{OUT} = 100 µA.

3: $TCV_{OUT} = (V_{OUT-HIGH} - V_{OUT-LOW}) *10^6 / (V_R * \Delta Temperature)$, $V_{OUT-HIGH}$ = highest voltage measured over the temperature range. $V_{OUT-LOW}$ = lowest voltage measured over the temperature range.

4: Load regulation is measured at a constant junction temperature using low duty cycle pulse testing. Changes in output voltage due to heating effects are determined using thermal regulation specification TCV_{OUT}.

5: Dropout voltage is defined as the input to output differential at which the output voltage drops 2% below its measured value with an applied input voltage of $V_{OUT(MAX)} + V_{DROPOUT(MAX)}$ or 2.7V, whichever is greater.

6: The maximum allowable power dissipation is a function of ambient temperature, the maximum allowable junction temperature and the thermal resistance from junction to air (i.e., T_A, T_J, θ_{JA}). Exceeding the maximum allowable power dissipation will cause the device operating junction temperature to exceed the maximum 150°C rating. Sustained junction temperatures above 150°C can impact the device reliability.

7: The junction temperature is approximated by soaking the device under test at an ambient temperature equal to the desired Junction temperature. The test time is small enough such that the rise in the Junction temperature over the ambient temperature is not significant.

TEMPERATURE SPECIFICATIONS

Parameters	Sym	Min	Typ	Max	Units	Conditions
Temperature Ranges						
Specified Temperature Range	T_A	-40		+125	°C	
Operating Temperature Range	T_A	-40		+125	°C	
Storage Temperature Range	T_A	-65		+150	°C	
Thermal Package Resistance						
Thermal Resistance, 3LD-SOT-223	θ_{JA} θ_{JC}	— —	62 15	— —	°C/W	EIA/JEDEC JESD51-7 FR-4 0.063 4-Layer Board
Thermal Resistance, 3LD-SOT-23A	θ_{JA} θ_{JC}	— —	336 110	— —	°C/W	EIA/JEDEC JESD51-7 FR-4 0.063 4-Layer Board
Thermal Resistance, 3LD-SOT-89	θ_{JA} θ_{JC}	— —	75 10	— —	°C/W	0.100 sq in copper on both sides of 2 sided board, with vias

Note 1: The maximum allowable power dissipation is a function of ambient temperature, the maximum allowable junction temperature and the thermal resistance from junction to air (i.e., T_A, T_J, θ_{JA}). Exceeding the maximum allowable power dissipation will cause the device operating junction temperature to exceed the maximum 150°C rating. Sustained junction temperatures above 150°C can impact the device reliability.

© 2007 Microchip Technology Inc.

2.0 TYPICAL PERFORMANCE CURVES

Note:	The graphs and tables provided following this note are a statistical summary based on a limited number of samples and are provided for informational purposes only. The performance characteristics listed herein are not tested or guaranteed. In some graphs or tables, the data presented may be outside the specified operating range (e.g., outside specified power supply range) and therefore outside the warranted range.

Note: Unless otherwise indicated: V_R = 1.8V, C_{OUT} = 1 µF Ceramic (X7R), C_{IN} = 1 µF Ceramic (X7R), I_L = 100 µA, T_A = +25°C, $V_{IN} = V_{OUT(MAX)} + V_{DROPOUT(MAX)}$ or 2.7V, whichever is greater.

Note: Junction Temperature (T_J) is approximated by soaking the device under test to an ambient temperature equal to the desired junction temperature. The test time is small enough such that the rise in Junction temperature over the Ambient temperature is not significant.

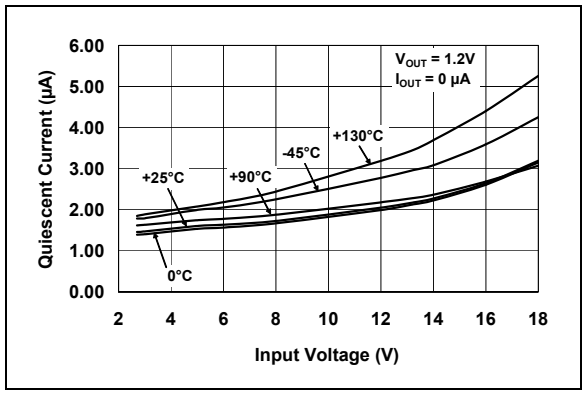

FIGURE 2-1: *Quiescent Current vs. Input Voltage.*

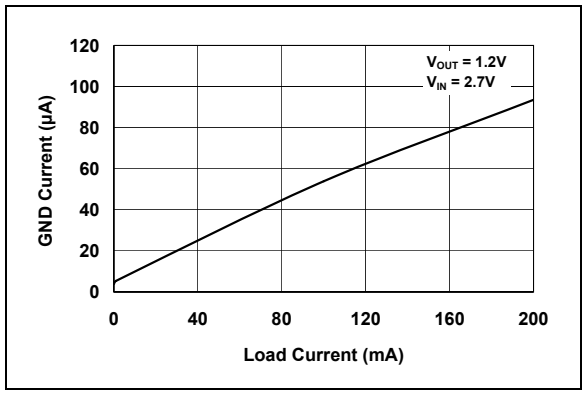

FIGURE 2-4: *Ground Current vs. Load Current.*

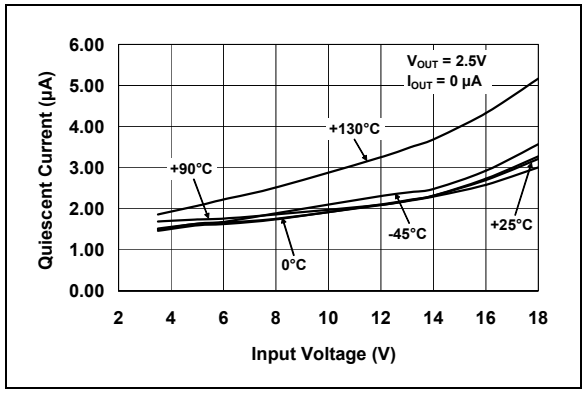

FIGURE 2-2: *Quiescent Current vs. Input Voltage.*

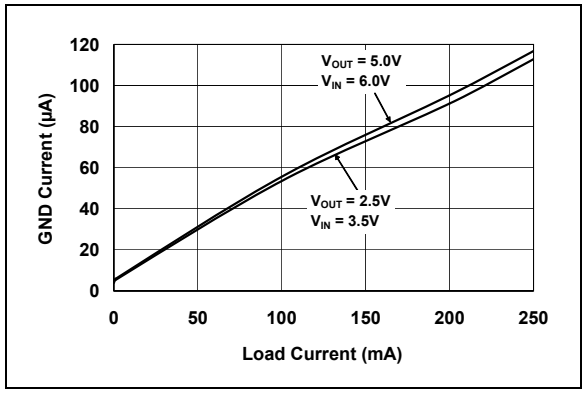

FIGURE 2-5: *Ground Current vs. Load Current.*

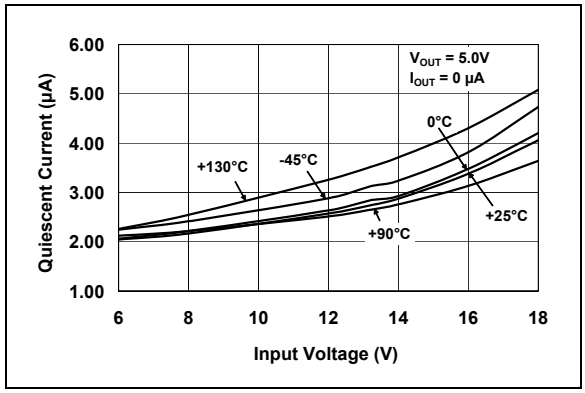

FIGURE 2-3: *Quiescent Current vs. Input Voltage.*

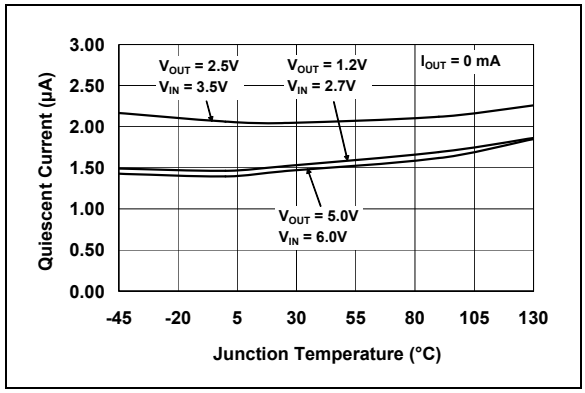

FIGURE 2-6: *Quiescent Current vs. Junction Temperature.*

Note: Unless otherwise indicated: V_R = 1.8V, C_{OUT} = 1 µF Ceramic (X7R), C_{IN} = 1 µF Ceramic (X7R), I_L = 100 µA, T_A = +25°C, $V_{IN} = V_{OUT(MAX)} + V_{DROPOUT(MAX)}$ or 2.7V, whichever is greater.

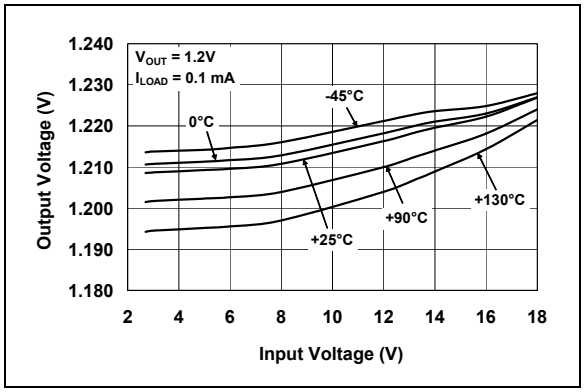

FIGURE 2-7: *Output Voltage vs. Input Voltage.*

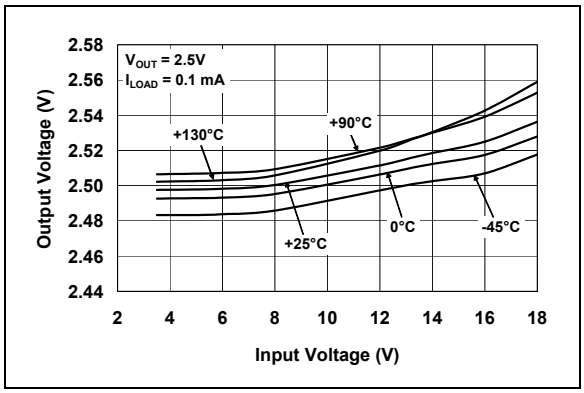

FIGURE 2-8: *Output Voltage vs. Input Voltage.*

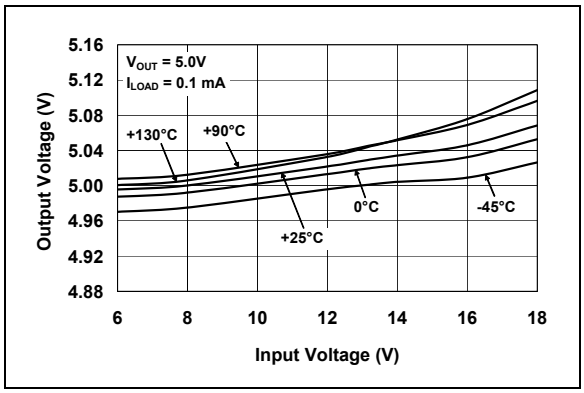

FIGURE 2-9: *Output Voltage vs. Input Voltage.*

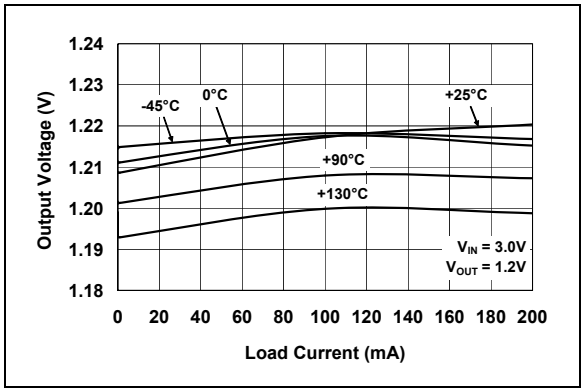

FIGURE 2-10: *Output Voltage vs. Load Current.*

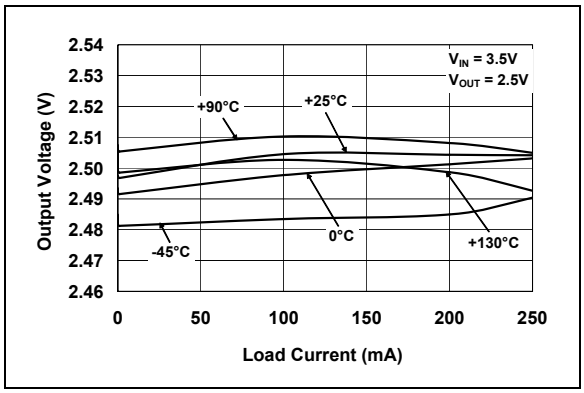

FIGURE 2-11: *Output Voltage vs. Load Current.*

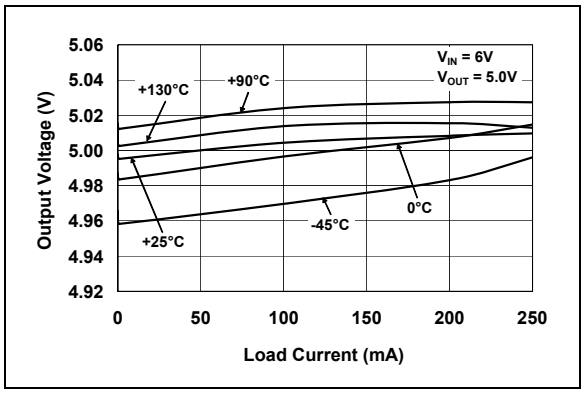

FIGURE 2-12: *Output Voltage vs. Load Current.*

© 2007 Microchip Technology Inc.

Note: Unless otherwise indicated: V_R = 1.8V, C_{OUT} = 1 µF Ceramic (X7R), C_{IN} = 1 µF Ceramic (X7R), I_L = 100 µA, T_A = +25°C, $V_{IN} = V_{OUT(MAX)} + V_{DROPOUT(MAX)}$ or 2.7V, whichever is greater.

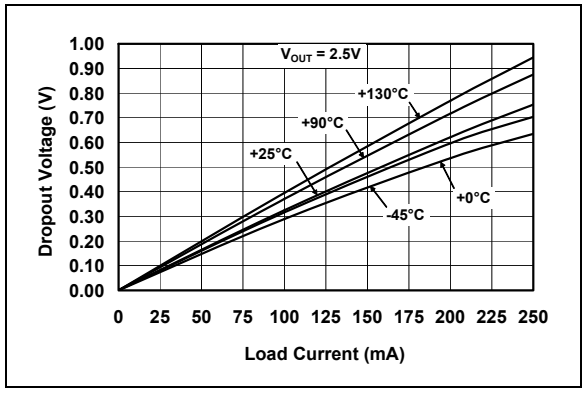

FIGURE 2-13: *Dropout Voltage vs. Load Current.*

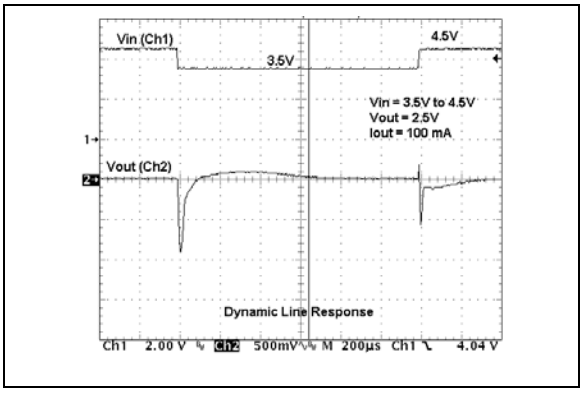

FIGURE 2-16: *Dynamic Line Response.*

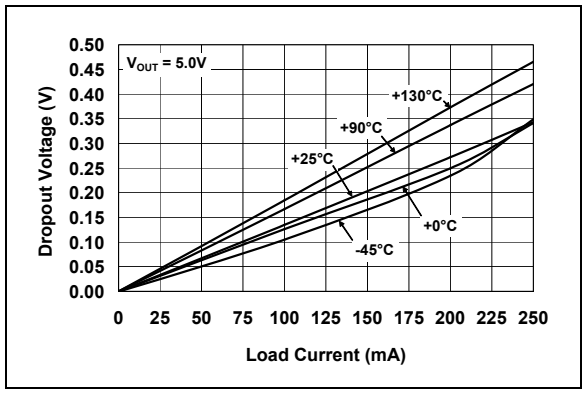

FIGURE 2-14: *Dropout Voltage vs. Load Current.*

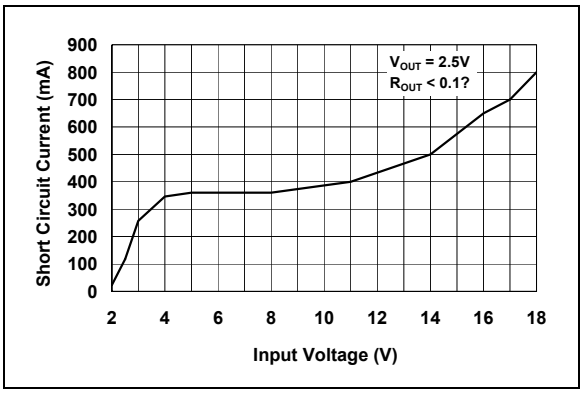

FIGURE 2-17: *Short Circuit Current vs. Input Voltage.*

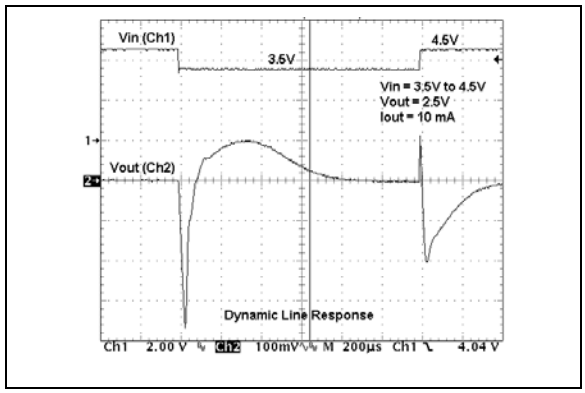

FIGURE 2-15: *Dynamic Line Response.*

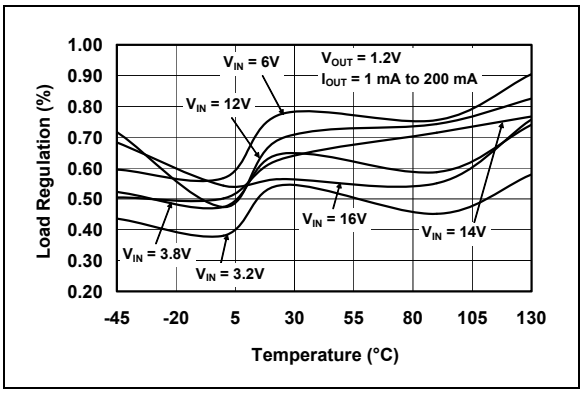

FIGURE 2-18: *Load Regulation vs. Temperature.*

Note: Unless otherwise indicated: V_R = 1.8V, C_{OUT} = 1 µF Ceramic (X7R), C_{IN} = 1 µF Ceramic (X7R), I_L = 100 µA, T_A = +25°C, $V_{IN} = V_{OUT(MAX)} + V_{DROPOUT(MAX)}$ or 2.7V, whichever is greater.

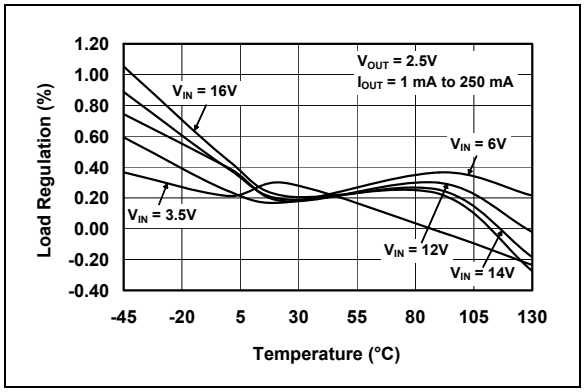

FIGURE 2-19: *Load Regulation vs. Temperature.*

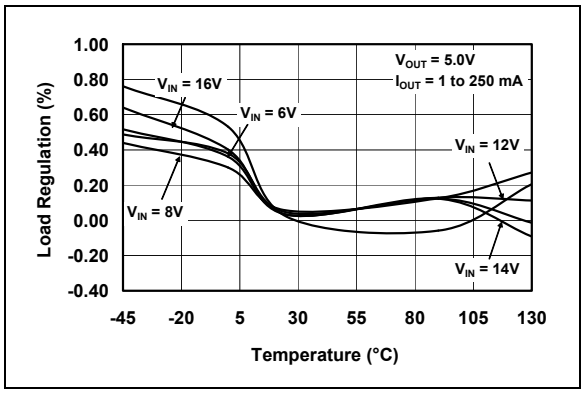

FIGURE 2-20: *Load Regulation vs. Temperature.*

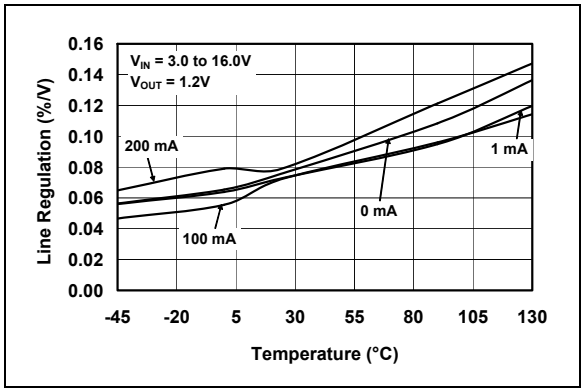

FIGURE 2-21: *Line Regulation vs. Temperature.*

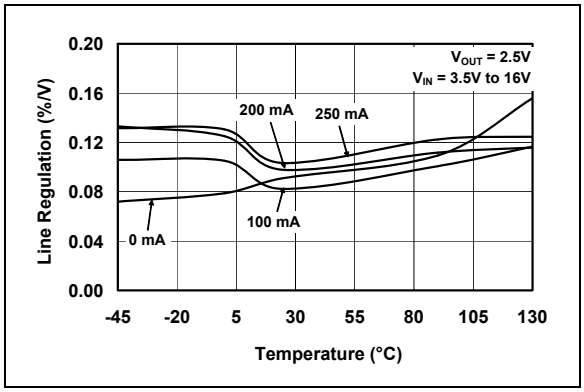

FIGURE 2-22: *Line Regulation vs. Temperature.*

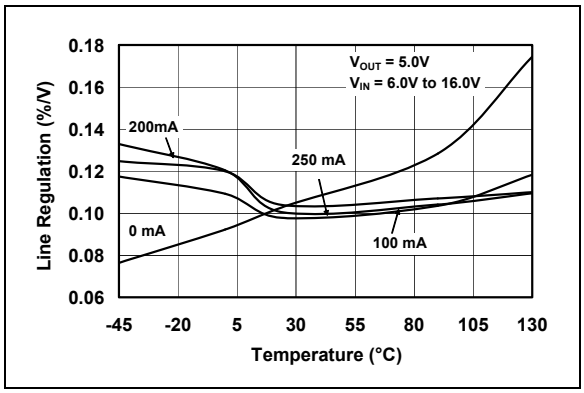

FIGURE 2-23: *Line Regulation vs. Temperature.*

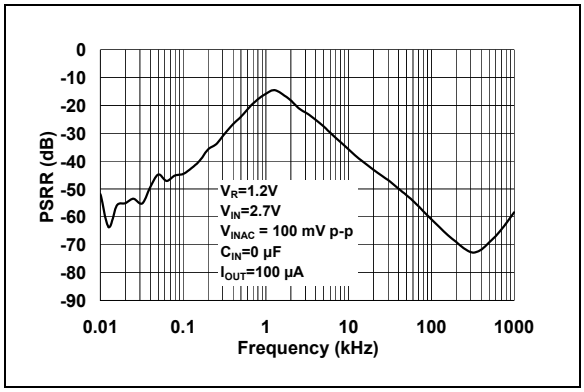

FIGURE 2-24: *PSRR vs. Frequency.*

© 2007 Microchip Technology Inc.

Note: Unless otherwise indicated: V_R = 1.8V, C_{OUT} = 1 µF Ceramic (X7R), C_{IN} = 1 µF Ceramic (X7R), I_L = 100 µA, T_A = +25°C, $V_{IN} = V_{OUT(MAX)} + V_{DROPOUT(MAX)}$ or 2.7V, whichever is greater.

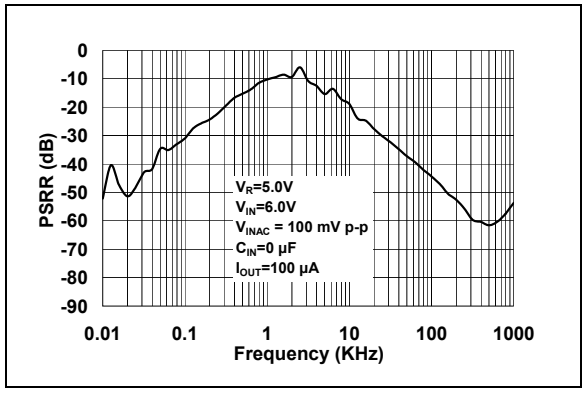

FIGURE 2-25: *PSRR vs. Frequency.*

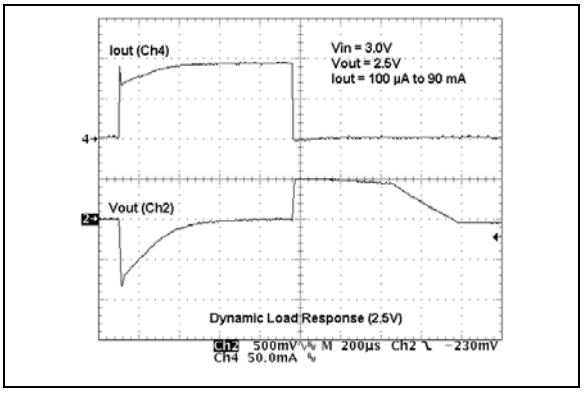

FIGURE 2-28: *Dynamic Load Response.*

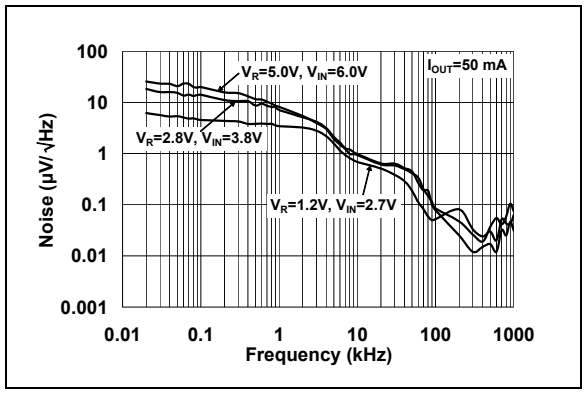

FIGURE 2-26: *Output Noise vs. Frequency.*

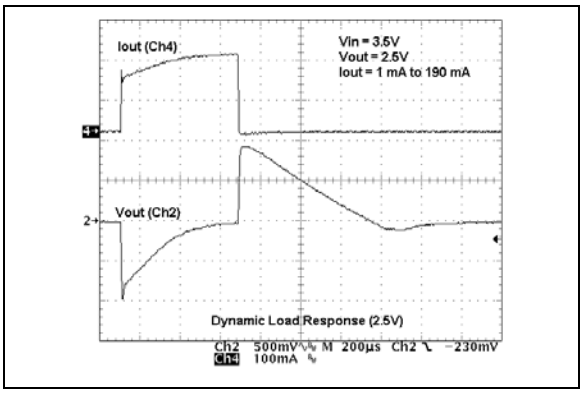

FIGURE 2-29: *Dynamic Load Response.*

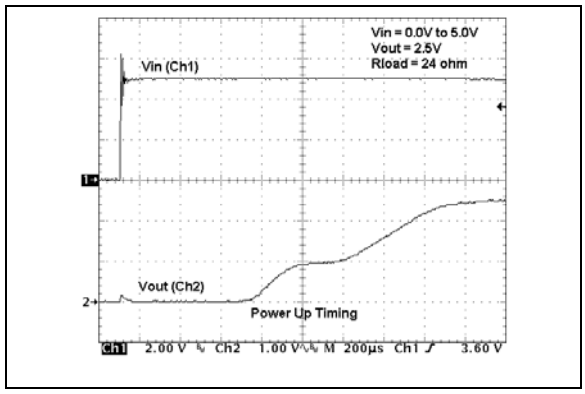

FIGURE 2-27: *Power Up Timing.*

3.0 PIN DESCRIPTIONS

The descriptions of the pins are listed in Table 3-1.

TABLE 3-1: MCP1703 PIN FUNCTION TABLE

Pin No. SOT-223-3	Pin No. SOT-23A	Pin No. SOT-89-3	Name	Function
2	1	1	GND	Ground Terminal
3	2	3	V_{OUT}	Regulated Voltage Output
1	3	2,Tab	V_{IN}	Unregulated Supply Voltage
	-	-	NC	No connection

3.1 Ground Terminal (GND)

Regulator ground. Tie GND to the negative side of the output and the negative side of the input capacitor. Only the LDO bias current (2.0 µA typical) flows out of this pin; there is no high current. The LDO output regulation is referenced to this pin. Minimize voltage drops between this pin and the negative side of the load.

3.2 Regulated Output Voltage (V_{OUT})

Connect V_{OUT} to the positive side of the load and the positive terminal of the output capacitor. The positive side of the output capacitor should be physically located as close to the LDO V_{OUT} pin as is practical. The current flowing out of this pin is equal to the DC load current.

3.3 Unregulated Input Voltage (V_{IN})

Connect V_{IN} to the input unregulated source voltage. Like all low dropout linear regulators, low source impedance is necessary for the stable operation of the LDO. The amount of capacitance required to ensure low source impedance will depend on the proximity of the input source capacitors or battery type. For most applications, 1 µF of capacitance will ensure stable operation of the LDO circuit. For applications that have load currents below 100 mA, the input capacitance requirement can be lowered. The type of capacitor used can be ceramic, tantalum or aluminum electrolytic. The low ESR characteristics of the ceramic will yield better noise and PSRR performance at high-frequency.

© 2007 Microchip Technology Inc.

4.0 DETAILED DESCRIPTION

4.1 Output Regulation

A portion of the LDO output voltage is fed back to the internal error amplifier and compared with the precision internal band-gap reference. The error amplifier output will adjust the amount of current that flows through the P-Channel pass transistor, thus regulating the output voltage to the desired value. Any changes in input voltage or output current will cause the error amplifier to respond and adjust the output voltage to the target voltage (refer to Figure 4-1).

4.2 Overcurrent

The MCP1703 internal circuitry monitors the amount of current flowing through the P-Channel pass transistor. In the event of a short-circuit or excessive output current, the MCP1703 will turn off the P-Channel device for a short period, after which the LDO will attempt to restart. If the excessive current remains, the cycle will repeat itself.

4.3 Overtemperature

The internal power dissipation within the LDO is a function of input-to-output voltage differential and load current. If the power dissipation within the LDO is excessive, the internal junction temperature will rise above the typical shutdown threshold of 150°C. At that point, the LDO will shut down and begin to cool to the typical turn-on junction temperature of 130°C. If the power dissipation is low enough, the device will continue to cool and operate normally. If the power dissipation remains high, the thermal shutdown protection circuitry will again turn off the LDO, protecting it from catastrophic failure.

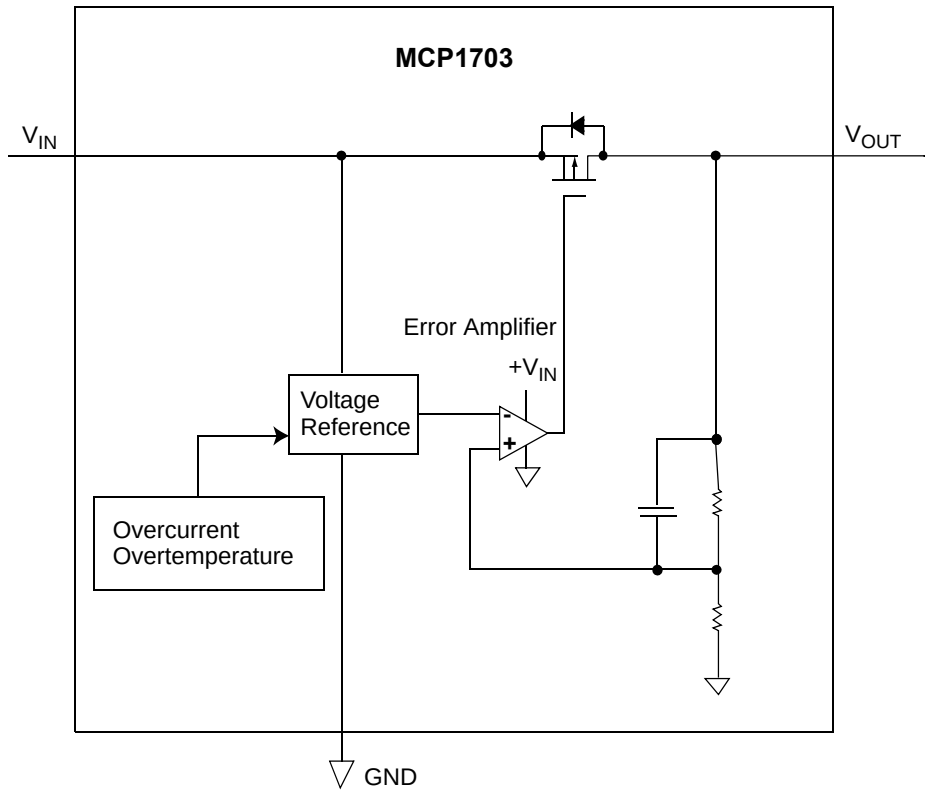

FIGURE 4-1: *Block Diagram.*

5.0 FUNCTIONAL DESCRIPTION

The MCP1703 CMOS low dropout linear regulator is intended for applications that need the lowest current consumption while maintaining output voltage regulation. The operating continuous load range of the MCP1703 is from 0 mA to 250 mA ($V_R \geq 2.5V$). The input operating voltage range is from 2.7V to 16.0V, making it capable of operating from two or more alkaline cells or single and multiple Li-Ion cell batteries.

5.1 Input

The input of the MCP1703 is connected to the source of the P-Channel PMOS pass transistor. As with all LDO circuits, a relatively low source impedance (10Ω) is needed to prevent the input impedance from causing the LDO to become unstable. The size and type of the capacitor needed depends heavily on the input source type (battery, power supply) and the output current range of the application. For most applications (up to 100 mA), a 1 µF ceramic capacitor will be sufficient to ensure circuit stability. Larger values can be used to improve circuit AC performance.

5.2 Output

The maximum rated continuous output current for the MCP1703 is 250 mA ($V_R \geq 2.5V$). For applications where $V_R < 2.5V$, the maximum output current is 200 mA.

A minimum output capacitance of 1.0 µF is required for small signal stability in applications that have up to 250 mA output current capability. The capacitor type can be ceramic, tantalum or aluminum electrolytic. The esr range on the output capacitor can range from 0Ω to 2.0Ω.

5.3 Output Rise time

When powering up the internal reference output, the typical output rise time of 1000 µs is controlled to prevent overshoot of the output voltage.

© 2007 Microchip Technology Inc.

6.0 APPLICATION CIRCUITS & ISSUES

6.1 Typical Application

The MCP1703 is most commonly used as a voltage regulator. Its low quiescent current and low dropout voltage make it ideal for many battery-powered applications.

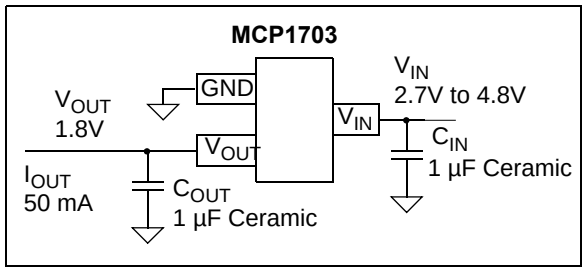

FIGURE 6-1: *Typical Application Circuit.*

6.1.1 APPLICATION INPUT CONDITIONS

Package Type	=	SOT-23A
Input Voltage Range	=	2.7V to 4.8V
V_{IN} maximum	=	4.8V
V_{OUT} typical	=	1.8V
I_{OUT}	=	50 mA maximum

6.2 Power Calculations

6.2.1 POWER DISSIPATION

The internal power dissipation of the MCP1703 is a function of input voltage, output voltage and output current. The power dissipation, as a result of the quiescent current draw, is so low, it is insignificant (2.0 µA x V_{IN}). The following equation can be used to calculate the internal power dissipation of the LDO.

EQUATION 6-1:

$$P_{LDO} = (V_{IN(MAX))} - V_{OUT(MIN)}) \times I_{OUT(MAX))}$$

P_{LDO} = LDO Pass device internal power dissipation

$V_{IN(MAX)}$ = Maximum input voltage

$V_{OUT(MIN)}$ = LDO minimum output voltage

The maximum continuous operating junction temperature specified for the MCP1703 is +125°C. To estimate the internal junction temperature of the MCP1703, the total internal power dissipation is multiplied by the thermal resistance from junction to ambient ($R\theta_{JA}$). The thermal resistance from junction to ambient for the SOT-23A pin package is estimated at 336°C/W.

EQUATION 6-2:

$$T_{J(MAX)} = P_{TOTAL} \times R\theta_{JA} + T_{AMAX}$$

Where:

$T_{J(MAX)}$	=	Maximum continuous junction temperature
P_{TOTAL}	=	Total device power dissipation
$R\theta_{JA}$	=	Thermal resistance from junction-to-ambient
T_{AMAX}	=	Maximum ambient temperature

The maximum power dissipation capability for a package can be calculated given the junction-to-ambient thermal resistance and the maximum ambient temperature for the application. The following equation can be used to determine the package maximum internal power dissipation.

EQUATION 6-3:

$$P_{D(MAX)} = \frac{(T_{J(MAX)} - T_{A(MAX)})}{R\theta_{JA}}$$

Where:

$P_{D(MAX)}$	=	Maximum device power dissipation
$T_{J(MAX)}$	=	Maximum continuous junction temperature
$T_{A(MAX)}$	=	Maximum ambient temperature
$R\theta_{JA}$	=	Thermal resistance from junction-to-ambient

EQUATION 6-4:

$$T_{J(RISE)} = P_{D(MAX)} \times R\theta_{JA}$$

Where:

$T_{J(RISE)}$	=	Rise in device junction temperature over the ambient temperature
P_{TOTAL}	=	Maximum device power dissipation
$R\theta_{JA}$	=	Thermal resistance from junction to ambient

EQUATION 6-5:

$$T_J = T_{J(RISE)} + T_A$$

Where:

T_J	=	Junction Temperature
$T_{J(RISE)}$	=	Rise in device junction temperature over the ambient temperature
T_A	=	Ambient temperature

© 2007 Microchip Technology Inc.

6.3 Voltage Regulator

Internal power dissipation, junction temperature rise, junction temperature and maximum power dissipation are calculated in the following example. The power dissipation, as a result of ground current, is small enough to be neglected.

6.3.1 POWER DISSIPATION EXAMPLE

Package

Package Type = SOT-23A

Input Voltage

V_{IN} = 2.7V to 4.8V

LDO Output Voltages and Currents

V_{OUT} = 1.8V

I_{OUT} = 50 mA

Maximum Ambient Temperature

$T_{A(MAX)}$ = +40°C

Internal Power Dissipation

Internal Power dissipation is the product of the LDO output current times the voltage across the LDO (V_{IN} to V_{OUT}).

$P_{LDO(MAX)} = (V_{IN(MAX)} - V_{OUT(MIN)}) \times I_{OUT(MAX)}$

P_{LDO} = (4.8V - (0.97 x 1.8V)) x 50 mA

P_{LDO} = 152.7 milli-Watts

Device Junction Temperature Rise

The internal junction temperature rise is a function of internal power dissipation and the thermal resistance from junction to ambient for the application. The thermal resistance from junction to ambient ($R\theta_{JA}$) is derived from an EIA/JEDEC standard for measuring thermal resistance for small surface mount packages. The EIA/JEDEC specification is JESD51-7, “High Effective Thermal Conductivity Test Board for Leaded Surface Mount Packages”. The standard describes the test method and board specifications for measuring the thermal resistance from junction to ambient. The actual thermal resistance for a particular application can vary depending on many factors, such as copper area and thickness. Refer to AN792, “A Method to Determine How Much Power a SOT23 Can Dissipate in an Application”, (DS00792), for more information regarding this subject.

$T_{J(RISE)} = P_{TOTAL} \times Rq_{JA}$

T_{JRISE} = 152.7 milli-Watts x 336.0°C/Watt

T_{JRISE} = 51.3°C

Junction Temperature Estimate

To estimate the internal junction temperature, the calculated temperature rise is added to the ambient or offset temperature. For this example, the worst-case junction temperature is estimated below.

$T_J = T_{JRISE} + T_{A(MAX)}$

T_J = 91.3°C

Maximum Package Power Dissipation at +40°C Ambient Temperature

SOT-23A (336.0°C/Watt = $R\theta_{JA}$)

$P_{D(MAX)}$ = (125°C - 40°C) / 336°C/W

$P_{D(MAX)}$ = 253 milli-Watts

SOT-89 (75°C/Watt = $R\theta_{JA}$)

$P_{D(MAX)}$ = (125°C - 40°C) / 75°C/W

$P_{D(MAX)}$ = 1.133 Watts

SOT-223 (62.9°C/Watt = $R\theta_{JA}$)

$P_{D(MAX)}$ = (125°C - 40°C) / 62.9°C/W

$P_{D(MAX)}$ = 1.35 Watts

6.4 Voltage Reference

The MCP1703 can be used not only as a regulator, but also as a low quiescent current voltage reference. In many microcontroller applications, the initial accuracy of the reference can be calibrated using production test equipment or by using a ratio measurement. When the initial accuracy is calibrated, the thermal stability and line regulation tolerance are the only errors introduced by the MCP1703 LDO. The low-cost, low quiescent current and small ceramic output capacitor are all advantages when using the MCP1703 as a voltage reference.

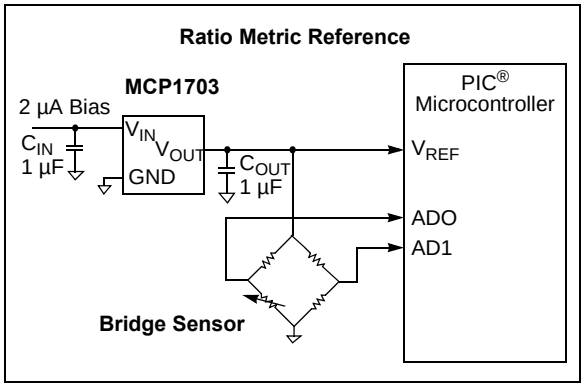

FIGURE 6-2: *Using the MCP1703 as a Voltage Reference.*

6.5 Pulsed Load Applications

For some applications, there are pulsed load current events that may exceed the specified 250 mA maximum specification of the MCP1703. The internal current limit of the MCP1703 will prevent high peak load demands from causing non-recoverable damage. The 250 mA rating is a maximum average continuous rating. As long as the average current does not exceed 250 mA, pulsed higher load currents can be applied to the MCP1703. The typical current limit for the MCP1703 is 500 mA (T_A +25°C).

© 2007 Microchip Technology Inc.

7.0 PACKAGING INFORMATION

7.1 Package Marking Information

3-Pin SOT-23A

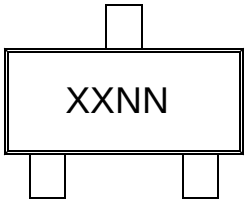

Standard Options for SOT-23A and SOT-89			
Extended Temp			
Symbol	**Voltage ***	**Symbol**	**Voltage ***
HM	1.2	HT	3.0
HP	1.5	HU	3.3
HQ	1.8	HV	4.0
HR	2.5	HW	5.0
HS	2.8	—	—

* Custom output voltages available upon request. Contact your local Microchip sales office for more information.

Example:

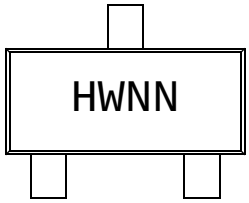

3-Lead SOT-89

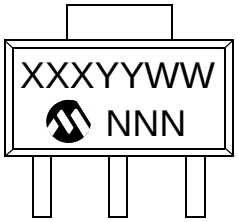

Example

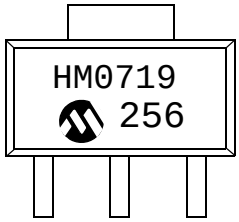

3-Lead SOT-223

Tab is GND

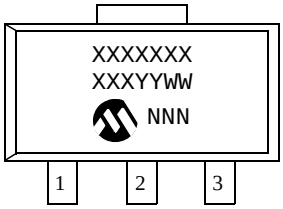

Standard Options for SOT-223			
Extended Temp			
Symbol	**Voltage ***	**Symbol**	**Voltage ***
12	1.2	30	3.0
15	1.5	33	3.3
18	1.8	40	4.0
25	2.5	50	5.0
28	2.8	—	—

* Custom output voltages available upon request. Contact your local Microchip sales office for more information.

Example:

Tab is GND

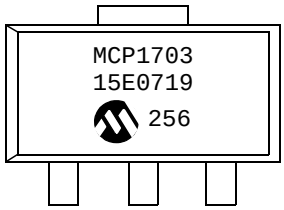

Legend:	XX...X	Customer-specific information
	Y	Year code (last digit of calendar year)
	YY	Year code (last 2 digits of calendar year)
	WW	Week code (week of January 1 is week ‘01’)
	NNN	Alphanumeric traceability code
	(e3)	Pb-free JEDEC designator for Matte Tin (Sn)
	*	This package is Pb-free. The Pb-free JEDEC designator ((e3)) can be found on the outer packaging for this package.

Note: In the event the full Microchip part number cannot be marked on one line, it will be carried over to the next line, thus limiting the number of available characters for customer-specific information.

3-Lead Plastic Small Outline Transistor (CB) [SOT-23A]

Note: For the most current package drawings, please see the Microchip Packaging Specification located at http://www.microchip.com/packaging

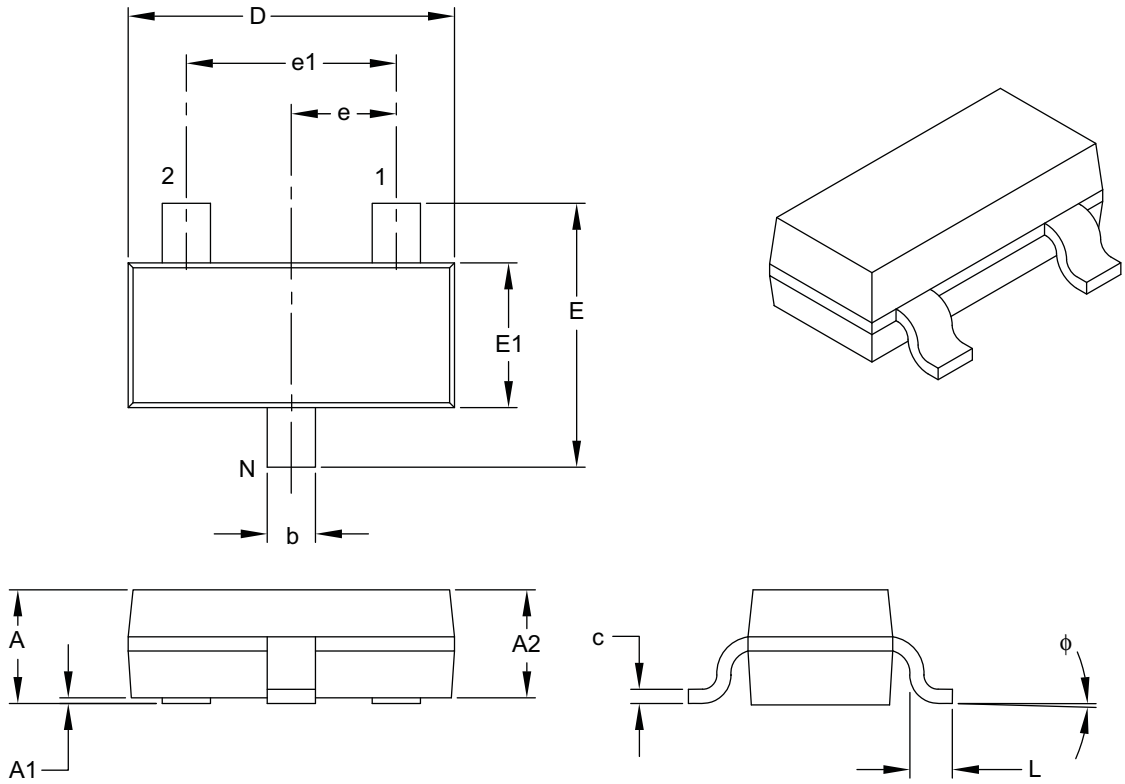

Units		MILLIMETERS		
Dimension Limits		MIN	NOM	MAX
Number of Pins	N	3		
Lead Pitch	e	0.95 BSC		
Outside Lead Pitch	e1	1.90 BSC		
Overall Height	A	0.89	–	1.45
Molded Package Thickness	A2	0.90	–	1.30
Standoff	A1	0.00	–	0.15
Overall Width	E	2.10	–	3.00
Molded Package Width	E1	1.20	–	1.80
Overall Length	D	2.70	–	3.10
Foot Length	L	0.15	–	0.60
Foot Angle	ϕ	0°	–	30°
Lead Thickness	c	0.09	–	0.26
Lead Width	b	0.30	–	0.51

Notes:

1. Dimensions D and E1 do not include mold flash or protrusions. Mold flash or protrusions shall not exceed 0.127 mm per side.
2. Dimensioning and tolerancing per ASME Y14.5M.

   BSC: Basic Dimension. Theoretically exact value shown without tolerances.

Microchip Technology Drawing C04-130B

© 2007 Microchip Technology Inc.

3-Lead Plastic Small Outline Transistor Header (MB) [SOT-89]

Note: For the most current package drawings, please see the Microchip Packaging Specification located at http://www.microchip.com/packaging

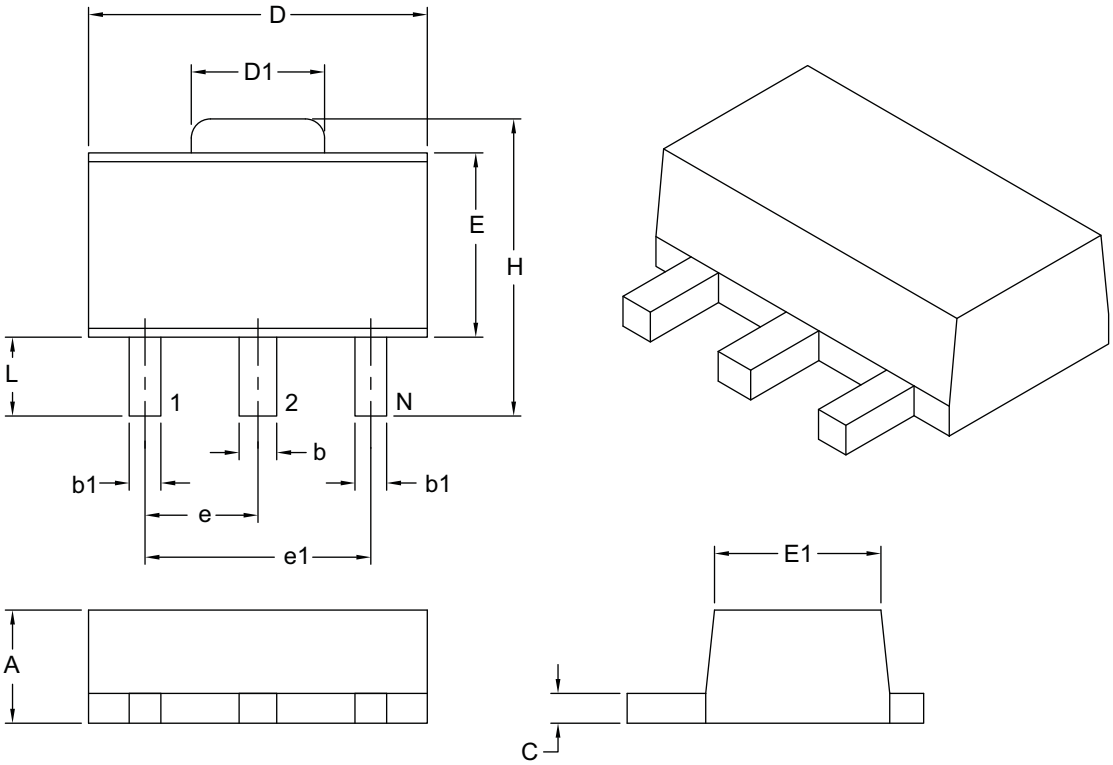

Units		MILLIMETERS	
Dimension Limits		MIN	MAX
Number of Leads	N	3	
Pitch	e	1.50 BSC	
Outside Lead Pitch	e1	3.00 BSC	
Overall Height	A	1.40	1.60
Overall Width	H	3.94	4.25
Molded Package Width at Base	E	2.29	2.60
Molded Package Width at Top	E1	2.13	2.29
Overall Length	D	4.39	4.60
Tab Length	D1	1.40	1.83
Foot Length	L	0.79	1.20
Lead Thickness	c	0.35	0.44
Lead 2 Width	b	0.41	0.56
Leads 1 & 3 Width	b1	0.36	0.48

Notes:

1. Dimensions D and E do not include mold flash or protrusions. Mold flash or protrusions shall not exceed 0.127 mm per side.
2. Dimensioning and tolerancing per ASME Y14.5M.

   BSC: Basic Dimension. Theoretically exact value shown without tolerances.

Microchip Technology Drawing C04-029B

3-Lead Plastic Small Outline Transistor (DB) [SOT-223]

Note: For the most current package drawings, please see the Microchip Packaging Specification located at http://www.microchip.com/packaging

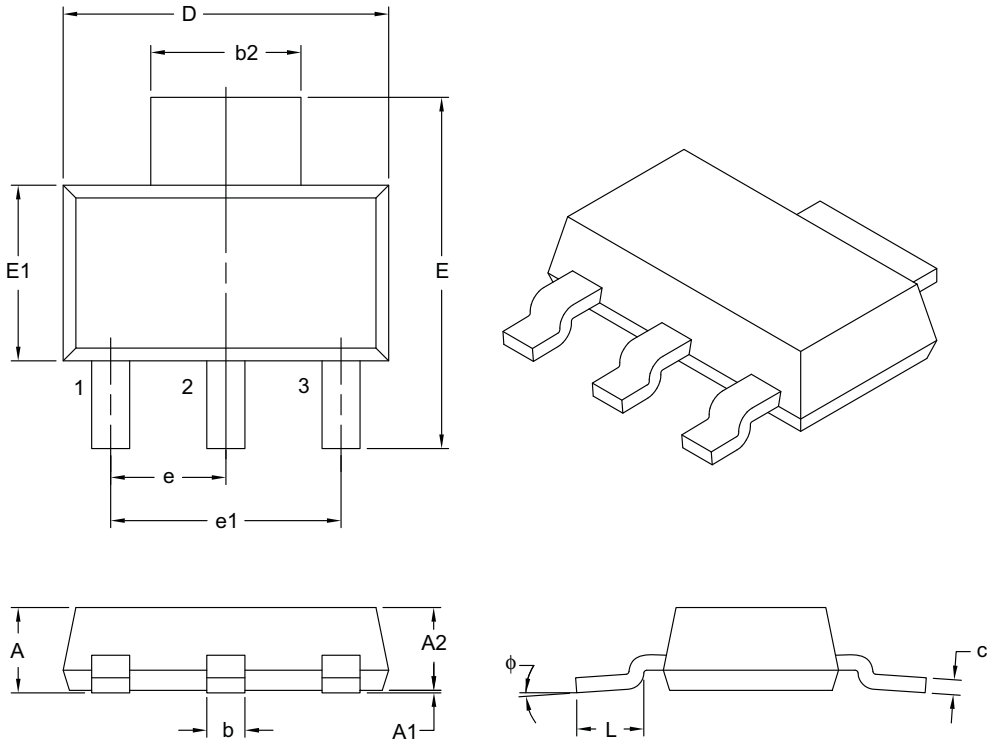

Units		MILLIMETERS		
Dimension Limits		MIN	NOM	MAX
Number of Leads	N	3		
Lead Pitch	e	2.30 BSC		
Outside Lead Pitch	e1	4.60 BSC		
Overall Height	A	–	–	1.80
Standoff	A1	0.02	–	0.10
Molded Package Height	A2	1.50	1.60	1.70
Overall Width	E	6.70	7.00	7.30
Molded Package Width	E1	3.30	3.50	3.70
Overall Length	D	6.30	6.50	6.70
Lead Thickness	c	0.23	0.30	0.35
Lead Width	b	0.60	0.76	0.84
Tab Lead Width	b2	2.90	3.00	3.10
Foot Length	L	0.75	–	–
Lead Angle	ϕ	0°	–	10°

Notes:

1. Dimensions D and E1 do not include mold flash or protrusions. Mold flash or protrusions shall not exceed 0.127 mm per side.
2. Dimensioning and tolerancing per ASME Y14.5M.

   BSC: Basic Dimension. Theoretically exact value shown without tolerances.

Microchip Technology Drawing C04-032B

© 2007 Microchip Technology Inc.

APPENDIX A: REVISION HISTORY

Revision A (June 2007)

- Original Release of this Document.

NOTES:

© 2007 Microchip Technology Inc.

PRODUCT IDENTIFICATION SYSTEM

To order or obtain information, e.g., on pricing or delivery, refer to the factory or the listed sales office.

PART NO.	X-	XX	X	X	X/	XX
Device	Tape and Reel	Output Voltage	Feature Code	Tolerance	Temp.	Package

Device:	MCP1703: 250 mA, 16V Low Quiescent Current LDO
Tape and Reel:	T = Tape and Reel
Output Voltage *:	12 = 1.2V “Standard” 15 = 1.5V “Standard” 18 = 1.8V “Standard” 25 = 2.5V “Standard” 28 = 2.8V “Standard” 30 = 3.0V “Standard” 33 = 3.3V “Standard” 40 = 4.0V “Standard” 50 = 5.0V “Standard” *Contact factory for other output voltage options.
Extra Feature Code:	0 = Fixed
Tolerance:	2 = 2.0% (Standard)
Temperature:	E = -40°C to +125°C
Package Type:	CB = Plastic Small Outline Transistor (SOT-23A) 3-lead, DB = Plastic Small Outline Transistor (SOT-223) 3-lead, MB = Plastic Small Outline Transistor (SOT-89) 3-lead,

Examples:

a) MCP1703T-1202E/XX: Tape and Reel, 1.2V

b) MCP1703T-1502E/XX: Tape and Reel, 1.5V

c) MCP1703T-1802E/XX: Tape and Reel, 1.8V

d) MCP1703T-2502E/XX: Tape and Reel, 2.5V

e) MCP1703T-2802E/XX: Tape and Reel, 2.8V

f) MCP1703T-3002E/XX: Tape and Reel, 3.0V

g) MCP1703T-3302E/XX: Tape and Reel, 3.3V

h) MCP1703T-3602E/XX: Tape and Reel, 3.6V

i) MCP1703T-4002E/XX: Tape and Reel, 4.0V

j) MCP1703T-5002E/XX: Tape and Reel, 5.0V

XX = CB for 3LD SOT-23A package
= DB for 3LD SOT-223 package
= MB for 3LD SOT-89 package

NOTES:

© 2007 Microchip Technology Inc.

Note the following details of the code protection feature on Microchip devices:

- Microchip products meet the specification contained in their particular Microchip Data Sheet.
- Microchip believes that its family of products is one of the most secure families of its kind on the market today, when used in the intended manner and under normal conditions.
- There are dishonest and possibly illegal methods used to breach the code protection feature. All of these methods, to our knowledge, require using the Microchip products in a manner outside the operating specifications contained in Microchip's Data Sheets. Most likely, the person doing so is engaged in theft of intellectual property.
- Microchip is willing to work with the customer who is concerned about the integrity of their code.
- Neither Microchip nor any other semiconductor manufacturer can guarantee the security of their code. Code protection does not mean that we are guaranteeing the product as "unbreakable."

Code protection is constantly evolving. We at Microchip are committed to continuously improving the code protection features of our products. Attempts to break Microchip's code protection feature may be a violation of the Digital Millennium Copyright Act. If such acts allow unauthorized access to your software or other copyrighted work, you may have a right to sue for relief under that Act.

Information contained in this publication regarding device applications and the like is provided only for your convenience and may be superseded by updates. It is your responsibility to ensure that your application meets with your specifications. MICROCHIP MAKES NO REPRESENTATIONS OR WARRANTIES OF ANY KIND WHETHER EXPRESS OR IMPLIED, WRITTEN OR ORAL, STATUTORY OR OTHERWISE, RELATED TO THE INFORMATION, INCLUDING BUT NOT LIMITED TO ITS CONDITION, QUALITY, PERFORMANCE, MERCHANTABILITY OR FITNESS FOR PURPOSE**.** Microchip disclaims all liability arising from this information and its use. Use of Microchip devices in life support and/or safety applications is entirely at the buyer's risk, and the buyer agrees to defend, indemnify and hold harmless Microchip from any and all damages, claims, suits, or expenses resulting from such use. No licenses are conveyed, implicitly or otherwise, under any Microchip intellectual property rights.

Trademarks

The Microchip name and logo, the Microchip logo, Accuron, dsPIC, KEELOQ, KEELOQ logo, microID, MPLAB, PIC, PICmicro, PICSTART, PRO MATE, rfPIC and SmartShunt are registered trademarks of Microchip Technology Incorporated in the U.S.A. and other countries.

AmpLab, FilterLab, Linear Active Thermistor, Migratable Memory, MXDEV, MXLAB, SEEVAL, SmartSensor and The Embedded Control Solutions Company are registered trademarks of Microchip Technology Incorporated in the U.S.A.

Analog-for-the-Digital Age, Application Maestro, CodeGuard, dsPICDEM, dsPICDEM.net, dsPICworks, ECAN, ECONOMONITOR, FanSense, FlexROM, fuzzyLAB, In-Circuit Serial Programming, ICSP, ICEPIC, Mindi, MiWi, MPASM, MPLAB Certified logo, MPLIB, MPLINK, PICkit, PICDEM, PICDEM.net, PICLAB, PICtail, PowerCal, PowerInfo, PowerMate, PowerTool, REAL ICE, rfLAB, Select Mode, Smart Serial, SmartTel, Total Endurance, UNI/O, WiperLock and ZENA are trademarks of Microchip Technology Incorporated in the U.S.A. and other countries.

SQTP is a service mark of Microchip Technology Incorporated in the U.S.A.

All other trademarks mentioned herein are property of their respective companies.

© 2007, Microchip Technology Incorporated, Printed in the U.S.A., All Rights Reserved.

Printed on recycled paper.

QUALITY MANAGEMENT SYSTEM
CERTIFIED BY DNV
ISO/TS 16949:2002

Microchip received ISO/TS-16949:2002 certification for its worldwide headquarters, design and wafer fabrication facilities in Chandler and Tempe, Arizona; Gresham, Oregon and design centers in California and India. The Company's quality system processes and procedures are for its PIC® MCUs and dsPIC® DSCs, KEELOQ® code hopping devices, Serial EEPROMs, microperipherals, nonvolatile memory and analog products. In addition, Microchip's quality system for the design and manufacture of development systems is ISO 9001:2000 certified.

WORLDWIDE SALES AND SERVICE

AMERICAS

Corporate Office
2355 West Chandler Blvd.
Chandler, AZ 85224-6199
Tel: 480-792-7200
Fax: 480-792-7277
Technical Support:
http://support.microchip.com
Web Address:
www.microchip.com

Atlanta
Duluth, GA
Tel: 678-957-9614
Fax: 678-957-1455

Boston
Westborough, MA
Tel: 774-760-0087
Fax: 774-760-0088

Chicago
Itasca, IL
Tel: 630-285-0071
Fax: 630-285-0075

Dallas
Addison, TX
Tel: 972-818-7423
Fax: 972-818-2924

Detroit
Farmington Hills, MI
Tel: 248-538-2250
Fax: 248-538-2260

Kokomo
Kokomo, IN
Tel: 765-864-8360
Fax: 765-864-8387

Los Angeles
Mission Viejo, CA
Tel: 949-462-9523
Fax: 949-462-9608

Santa Clara
Santa Clara, CA
Tel: 408-961-6444
Fax: 408-961-6445

Toronto
Mississauga, Ontario,
Canada
Tel: 905-673-0699
Fax: 905-673-6509

ASIA/PACIFIC

Asia Pacific Office
Suites 3707-14, 37th Floor
Tower 6, The Gateway
Habour City, Kowloon
Hong Kong
Tel: 852-2401-1200
Fax: 852-2401-3431

Australia - Sydney
Tel: 61-2-9868-6733
Fax: 61-2-9868-6755

China - Beijing
Tel: 86-10-8528-2100
Fax: 86-10-8528-2104

China - Chengdu
Tel: 86-28-8665-5511
Fax: 86-28-8665-7889

China - Fuzhou
Tel: 86-591-8750-3506
Fax: 86-591-8750-3521

China - Hong Kong SAR
Tel: 852-2401-1200
Fax: 852-2401-3431

China - Qingdao
Tel: 86-532-8502-7355
Fax: 86-532-8502-7205

China - Shanghai
Tel: 86-21-5407-5533
Fax: 86-21-5407-5066

China - Shenyang
Tel: 86-24-2334-2829
Fax: 86-24-2334-2393

China - Shenzhen
Tel: 86-755-8203-2660
Fax: 86-755-8203-1760

China - Shunde
Tel: 86-757-2839-5507
Fax: 86-757-2839-5571

China - Wuhan
Tel: 86-27-5980-5300
Fax: 86-27-5980-5118

China - Xian
Tel: 86-29-8833-7250
Fax: 86-29-8833-7256

ASIA/PACIFIC

India - Bangalore
Tel: 91-80-4182-8400
Fax: 91-80-4182-8422

India - New Delhi
Tel: 91-11-4160-8631
Fax: 91-11-4160-8632

India - Pune
Tel: 91-20-2566-1512
Fax: 91-20-2566-1513

Japan - Yokohama
Tel: 81-45-471- 6166
Fax: 81-45-471-6122

Korea - Gumi
Tel: 82-54-473-4301
Fax: 82-54-473-4302

Korea - Seoul
Tel: 82-2-554-7200
Fax: 82-2-558-5932 or
82-2-558-5934

Malaysia - Penang
Tel: 60-4-646-8870
Fax: 60-4-646-5086

Philippines - Manila
Tel: 63-2-634-9065
Fax: 63-2-634-9069

Singapore
Tel: 65-6334-8870
Fax: 65-6334-8850

Taiwan - Hsin Chu
Tel: 886-3-572-9526
Fax: 886-3-572-6459

Taiwan - Kaohsiung
Tel: 886-7-536-4818
Fax: 886-7-536-4803

Taiwan - Taipei
Tel: 886-2-2500-6610
Fax: 886-2-2508-0102

Thailand - Bangkok
Tel: 66-2-694-1351
Fax: 66-2-694-1350

EUROPE

Austria - Wels
Tel: 43-7242-2244-39
Fax: 43-7242-2244-393

Denmark - Copenhagen
Tel: 45-4450-2828
Fax: 45-4485-2829

France - Paris
Tel: 33-1-69-53-63-20
Fax: 33-1-69-30-90-79

Germany - Munich
Tel: 49-89-627-144-0
Fax: 49-89-627-144-44

Italy - Milan
Tel: 39-0331-742611
Fax: 39-0331-466781

Netherlands - Drunen
Tel: 31-416-690399
Fax: 31-416-690340

Spain - Madrid
Tel: 34-91-708-08-90
Fax: 34-91-708-08-91

UK - Wokingham
Tel: 44-118-921-5869
Fax: 44-118-921-5820

12/08/06

© 2007 Microchip Technology Inc.

Mouser Electronics

Authorized Distributor

Click to View Pricing, Inventory, Delivery & Lifecycle Information:

Microchip:

MCP1703-1202E/DB MCP1703-1802E/DB MCP1703-2502E/DB MCP1703-3002E/DB MCP1703-3302E/DB MCP1703-5002E/DB MCP1703T-1202E/CB MCP1703T-1202E/DB MCP1703T-1202E/MB MCP1703T-1802E/CB MCP1703T-1802E/DB MCP1703T-1802E/MB MCP1703T-2502E/DB MCP1703T-2502E/MB MCP1703T-3002E/CB MCP1703T-3002E/DB MCP1703T-3002E/MB MCP1703T-3302E/CB MCP1703T-3302E/DB MCP1703T-3302E/MB MCP1703T-5002E/CB MCP1703T-5002E/DB MCP1703T-5002E/MB