MICRO SWITCH
a Honeywell Division
FED.MFG.CODE 91929

MINIATURE PRECISION LIMIT SWITCH

CATALOG LISTING
914CE20-9

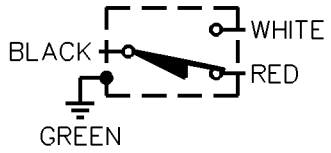

CIRCUIT DIAGRAM

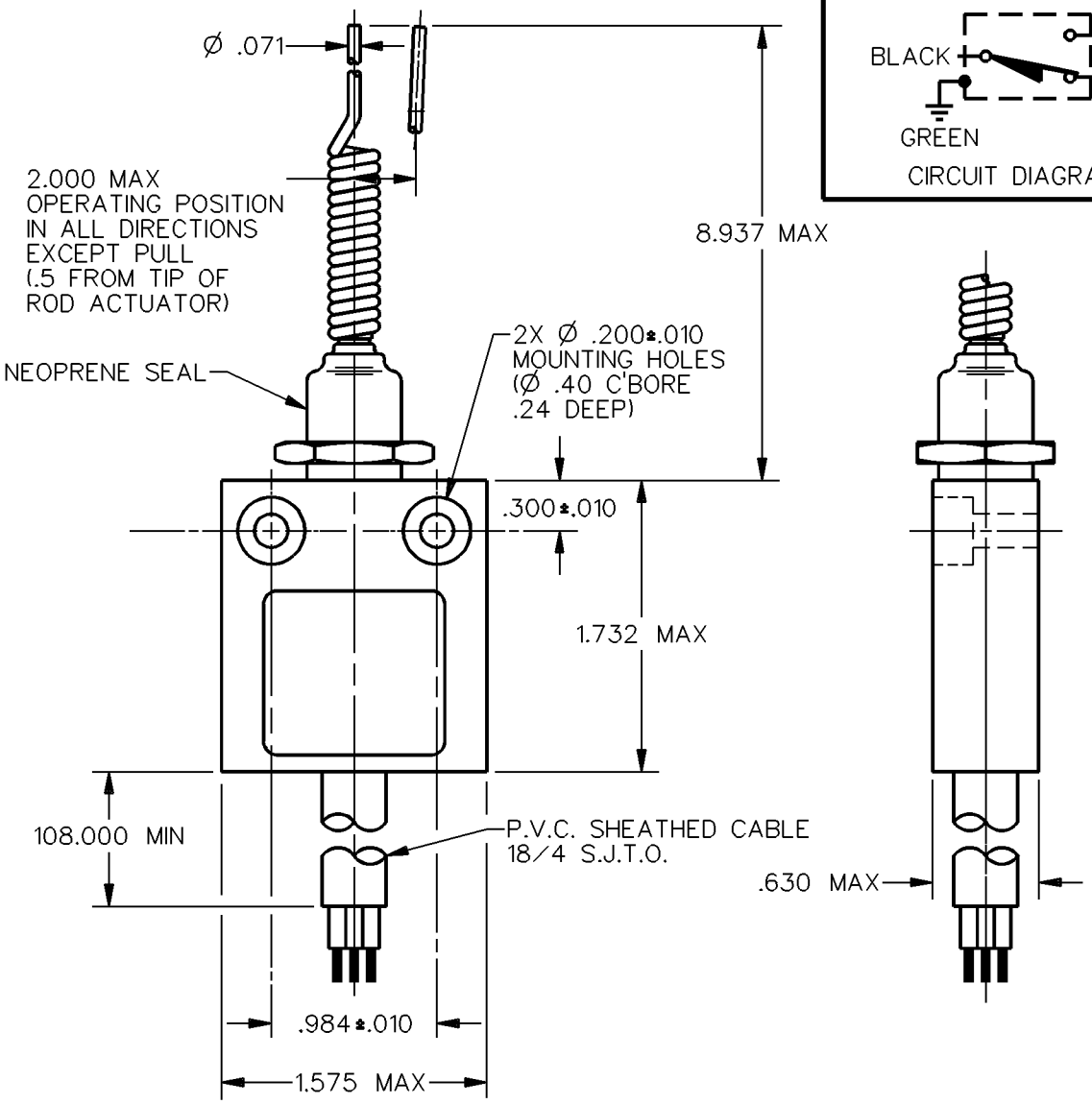

NOTES
1 – ZINC HOUSING FINISHED WITH GRAY PAINT

ANSI Y14.5M–1982 APPLIES

THIS DRAWING COVERS A PROPRIETARY ITEM AND IS THE PROPERTY OF MICRO SWITCH, A DIVISION OF HONEYWELL. THIS DRAWING IS NOT TO BE COPIED OR USED WITHOUT THE APPROVAL OF MICRO SWITCH.

THIRD ANGLE PROJECTION

CHARACTERISTICS	ELECTRICAL DATA	SCALE FULL — DO NOT SCALE PRINT
OPERATING FORCE — — — 2 OZ MAX	CONTACT ARRANGEMENT S P D T 5A – 250 VAC 1/10HP – 125 OR 250 VAC	UNLESS OTHERWISE SPECIFIED TOLERANCES ARE ONE PLACE (.0) ±.030 TWO PLACE (.00) ±.015 THREE PLACE (.000) ±.005 ANGLES ± WEIGHT

914CE20-9 | M | DRAWING NUMBER | ISSUE 3 | REPLACES | RELEASE NO. PR-7324 | CHECK

REVISIONS
A CO-69061 S A V 31 AUG 91

CHECK | CHECK | CHECK

DDM/CAD | DRAWN S A V 31 AUG 91

Downloaded from Arrow.com.