305

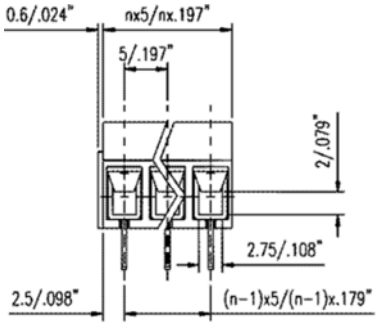
0.6/.024"
nx5/nx.197"
5/.197"
2/.079"
2.75/.108"
2.5/.098"
(n−1)x5/(n−1)x.179"

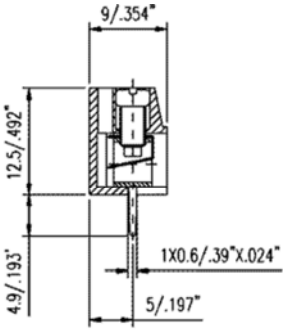
9/.354"
12.5/.492"
4.9/.193"
1X0.6/.39"X.024"
5/.197"

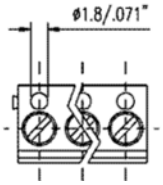
ø1.8/.071"

306

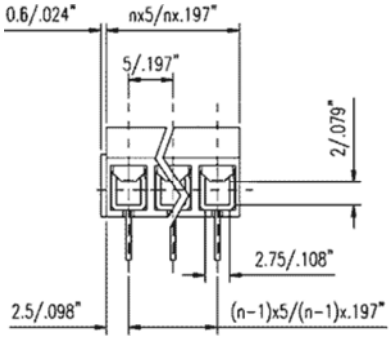
0.6/.024"
nx5/nx.197"
5/.197"
2/.079"
2.75/.108"
2.5/.098"
(n−1)x5/(n−1)x.197"

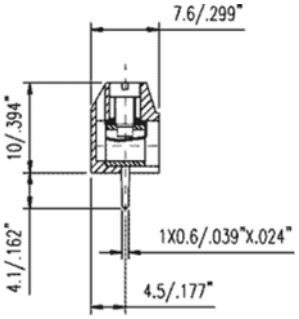
7.6/.299"
10/.394"
4.1/.162"
1X0.6/.039"X.024"
4.5/.177"

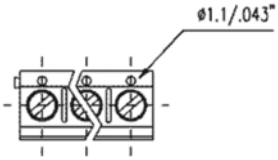
ø1.1/.043"