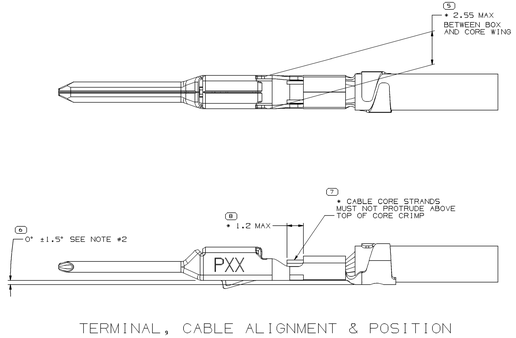

TERMINAL, CABLE ALIGNMENT & POSITION

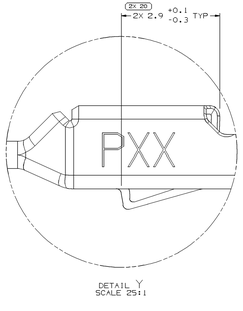

DETAIL Y
SCALE 25:1

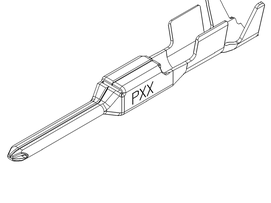

SYMBOL DEFINITION		MISSING SYMBOLS
A DIMENSION WITHOUT AN INSPECTION REPORT SYMBOL (□) DOES NOT REQUIRE INSPECTION. IT MAY BE CONTROLLED ON THE INDIVIDUAL COMPONENT DRAWING.	TOTAL NO OF INSPECTIONS REQUIRED 30	NO MISSING SYMBOL NUMBER
	LAST NO. USED 23	

DATE	CTN	REV	N/P	CHG	ZONE	REVISION HISTORY	AUTH	DR	PA	PV
15OC13	R	01	-	-	-	1P64788 - WAS PE292222 AND RELEASED; 1P64789 - WAS PE292021 AND RELEASED; 1P64790 - WAS PE292024 AND RELEASED; 1P64791 - WAS PE291118 AND RELEASED; 1P64792 - WAS PE292225 AND RELEASED	424118	CDD	EVP	PJB
22JA14	R	02	-	-	-	ADDED "SHT 1 OF 2"	425224	CBO	CBO	LES
05MA14	R	03	-	-	-	ALL PARTS - ADDED BOTTOM VIEW, CURRENT CAPACITY & PERFORMANCE REQUIREMENT NOTES, REVISED NOTE #1, CABLE ID & & COLUMNS IN CHART AND REMOVED ALUMINUM CABLE SIZE & DIAMETER COLUMNS IN CHART	425783	APB	EVP	PJB
27AU14	R	04	-	-	-	ALL PARTS - ADDED REFERENCE MATING COMPONENTS & CUT-OFF DIMENSIONS NOTES	427427	APB	EVP	PJB
03NO14	R	05	-	-	-	1P64789 - CABLE DIAMETER #AS 1.4 - 1.8 ALL PARTS - REVISED GRAPHICS	428083	APB	PJB	PJB
01DE14	R	06	-	-	-	1P64788 - CABLE DIA #AS 0.81 - 1.1, 1P64789 - CABLE DIA #AS 1.25 - 1.4, 1P64791 - CABLE DIA #AS 2.1 - 2.4 AND 1P64792 - CABLE SIZE #AS 1.5 - 2 & CABLE DIA #AS 2.0 - 2.06	428261	JVR	JVR	PJB
19FE15	R	07	-	-	-	ALL PARTS - UPDATED PART AVAILABILITY	428910	APB	APB	PJB
26FE15	R	08	-	-	-	ALL PARTS - UPDATED PCM ATTRIBUTES	428984	APB	APB	PJB
09OC15	R	09	-	-	-	ALL PARTS - UPDATED PCM ATTRIBUTES	431030	APB	APB	PDL

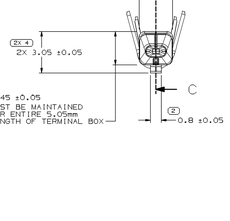

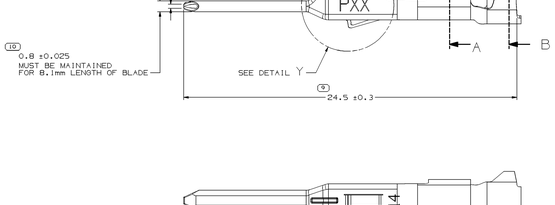

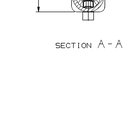

SECTION A-A

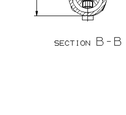

SECTION B-B

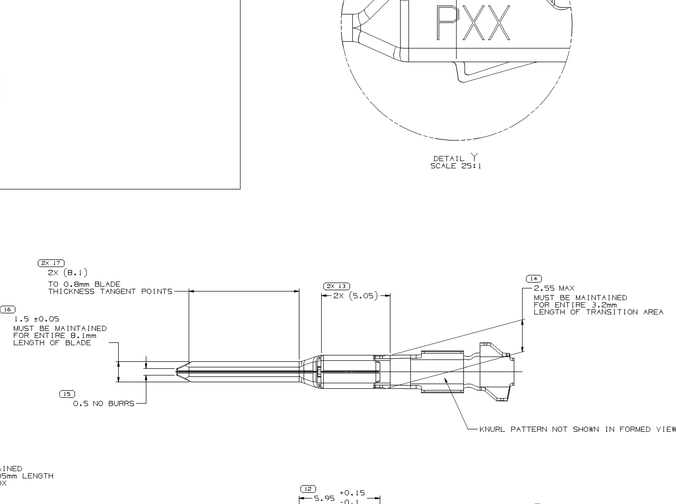

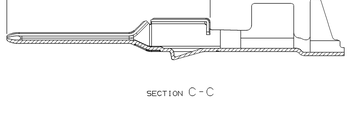

SECTION C-C

NOTES

1. UNLESS OTHERWISE SPECIFIED AND/OR INDICATED:

   DIMENSIONS ARE TO FACE OF VIEW SHOWN AND AUTOMATICALLY ROUNDED BY COMPUTER FOR INSPECTION (SEE MATH MODEL FOR PRECISE DIMENSIONS) - FOR ALL OTHER DIMENSIONS NOT SHOWN BUT REQUIRED FOR TOOL BUILD, SEE MATH MODEL FOR PRECISE TOOL PATH DATA.

2. PLUS ANGLE IS WING BOTTOM SURFACE ROTATED COUNTERCLOCKWISE AGAINST THE BOX BOTTOM SURFACE.
3. MAXIMUM INSULATION CRIMP WIDTH OF 2.9mm AND HEIGHT 3.3mm FOR CABLE SIZE UP TO 2.8mm O.D.; MAXIMUM CORE CRIMP WIDTH OF 2.6mm.
4. PLATING TYPE:

   1. REFLOW TIN 1.9 - 3.3 MICROMETERS THICK OVER NICKEL UNDERPLATE 0.13 - 0.5 MICROMETERS THICK.

   PLATING TYPE INFORMATION SHOWN ABOVE IS REFERENCE ONLY. PLATING REQUIREMENTS ARE CONTAINED IN APPLICABLE MATERIAL SPECIFICATION.

5. MAXIMUM CURRENT CAPACITY AS DEFINED BY USCAR-2 R5 SECTION 5.3.3 IS 21.5 AMPS WITH 2.0mm² COPPER CABLE
6. PARTS MEET THE PERFORMANCE REQUIREMENTS OF GMW3191 DEC2007 AND SAE/USCAR-2 R5 REVISIONS FOR THE FOLLOWING CLASSIFICATIONS:

   TEMPERATURE CLASS 3 (-40°C TO 125°C)
   VIBRATION CLASS I (ON BODY OR CHASSIS)
   SEALING CLASS I (UNSEALED) FOR GA ID 25, 14 & 15
   SEALING CLASS 2 & 3 (SEALED-CONNECTOR DEPENDENT) FOR GA ID 21 & 17

7. REFERENCE MATING COMPONENT OR EQUIVALENTS:
   TERMINAL 13849930
8. • DENOTES DIMENSIONS MADE AT CUT-OFF AND CRIMP DIE

PART NUMBER	REV	N/P	MATERIAL SPECIFICATION	MATERIAL SIZE	CONTACT AREA PLATING TYPE (SEE NOTE 4)	CRIMP AREA PLATING TYPE (SEE NOTE 4)	CONTACT PLATING I.D.	CABLE I.D.	CABLE SIZE (mm²)	CABLE DIAMETER				
										B_1 ±0.15	B_2 ±0.25	(H_1)	(H_2)	
13964792	03	AD	COPPER ALLOY	0.25 X 28.4	I	I	SN	14	1.5 - 2.0	2.0 - 2.8	3.1	4.2	3.6	4.3
13964791	03	AD	COPPER ALLOY	0.25 X 28.4	I	I	SN	15	1.25 - 1.5	1.8 - 2.4	2.9	3.9	3.3	3.8
13964790	03	AD	COPPER ALLOY	0.25 X 28.4	I	I	SN	17	0.75 - 1.0	1.7 - 2.34	2.4	3.6	2.8	3.6
13964789	03	AD	COPPER ALLOY	0.25 X 28.4	I	I	SN	21	0.35 - 0.5	1.2 - 1.83	1.9	2.9	2.2	3
13964788	03	AD	COPPER ALLOY	0.25 X 28.4	I	I	SN	25	0.13 - 0.22	0.81 - 1.2	1.46	1.8	1.6	1.8
									COPPER					

DRAWING NUMBER							
13954063							
SIZE	SCALE	SHEET NO	SHEET NO	WEIGHT	REV	N/P	
A1x3	10:1	2 OF 1	1 OF 2	R	09	-	

THIS DRAWING IS THE PROPERTY OF DELPHI CORPORATION AND IS LOANED TO THE RECIPIENT IN CONFIDENCE. NO REPRODUCTION OR DISTRIBUTION OF THIS DRAWING OR ITS CONTENTS IS PERMITTED WITHOUT WRITTEN AUTHORIZATION FROM DELPHI. THIS DRAWING IS TO BE RETURNED UPON REQUEST.

DELPHI
DELPHI PACKARD ELECTRICAL/ELECTRONIC ARCHITECTURE
WARREN, OH

COPYRIGHT 2013 DELPHI CORPORATION ARCHIVE ITS AFFILIATES. ALL RIGHTS RESERVED.

DR		DATE
APVCH CARLOS DELGADILLO		15OC13
APVGH ELIAS VAZQUEZ Y.		15OC13
APVGH R. J. A. BLASIO		15OC13
APVGH		
APVGN		

SUBSTANCES OF CONCERN AND RECYCLED CONTENT PER DELPHI (2HH00)

DRAWING SIZE: SIZE CHART

DRAWING NAME: TAXI TERM M OCS 1.5

DRAWING NUMBER: 13954063

SIZE	SCALE	SHEET NO	SHEET NO	WEIGHT	REV	N/P
A1x3	10:1	1 OF 1	1 OF 2	R	09	-

13954063