Downloaded from Arrow.com.

REV.	DESCRIPTION	DATE	APPROVED
F	Updated Material.	10/28/08	T. Y.
G	Added Ordering Information.	06/06/11	T. Y.
H	Removed Part Numbers from Part Offering List.	05/06/15	J. C.
J	Updated Material Description.	10/09/15	J. C.
K	Engineering Update w/o Changes.	10/22/15	J. C.

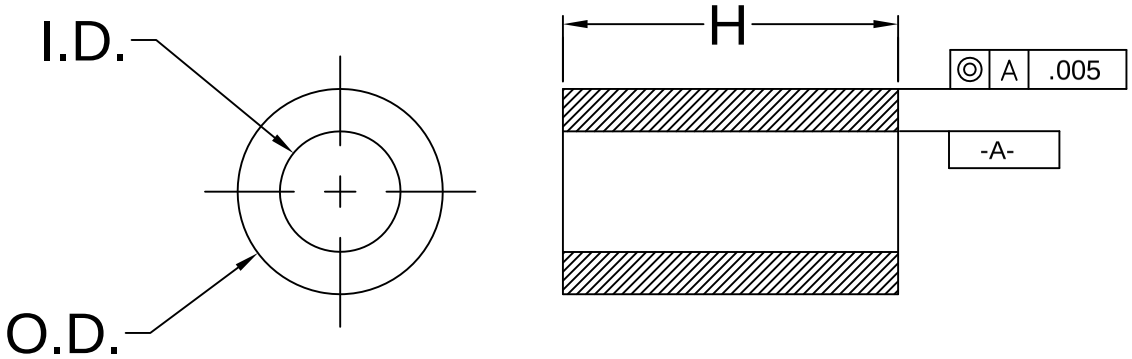

SERIES	"H" DIMENSION	I.D.	O.D.
901	.030-1.250 (.76-31.8)	.028 (.71)	.085 (2.2)
902	.030-1.250 (.76-31.8)	.032 (.81)	.125 (3.2)
903	.030-1.250 (.76-31.8)	.047 (1.2)	.156 (4.0)
904	.030-1.250 (.76-31.8)	.063 (1.6)	.187 (4.7)
905	.030-1.250 (.76-31.8)	.147 (3.7)	.250 (6.4)
906	.030-1.250 (.76-31.8)	.085 (2.2)	.148 (3.8)
907	.030-1.250 (.76-31.8)	.105 (2.7)	.167 (4.2)
908	.030-1.250 (.76-31.8)	.125 (3.2)	.187 (4.7)
911	.030-1.250 (.76-31.8)	.125 (3.2)	.250 (6.4)
912	.030-1.250 (.76-31.8)	.171 (4.3)	.250 (6.4)
913	.030-1.250 (.76-31.8)	.091 (2.3)	.187 (4.7)
937	.030-1.250 (.76-31.8)	.090 (2.3)	.125 (3.2)
938	.030-1.250 (.76-31.8)	.032 (.81)	.085 (2.2)
939	.030-1.250 (.76-31.8)	.047 (1.2)	.125 (3.2)
940	.030-1.250 (.76-31.8)	.063 (1.6)	.156 (4.0)

ORDERING INFORMATION:

9XX-XXX

SERIES — LENGTH

INCHES, MULTIPLES OF .005"
.030" = 030
.100" = 100
1.250" = 1.250

WHOLE MILLIMETERS
2mm = 2MM
5mm = 5MM

3. TOLERANCE "H" DIMENSION:
   0.030 - 0.500 (1.0 - 12.7mm)±0.005(0.1mm)
   0.505 - 0.750 (12.8 - 19.1mm)±0.008(0.2mm)
   0.755 - 1.250 (19.2 - 31.8mm)±0.015(0.4mm)
2. MATERIAL: NYLON 6, ULTRAMID 8270 HS, NATURAL. BIVAR MATERIAL CODE 01-NL-WE.
   ALLIED CHEMICAL POLYAMID NYLON 6 WITH CLARIANT CNY02655 WHITE NYLON CONCENTRATE.
1. GENERAL SPECIFICATIONS: BIVAR EXTRUDED PRODUCT SPECIFICATION BV00-E103.

STANDARD TOLERANCE
(UNLESS OTHERWISE SPECIFIED)

DECIMALS		ANGULAR
.X	± .1	X° ± 1°
.XX	± .01	
.XXX	± .005	

BIVAR®
4 THOMAS, IRVINE, CA. 92618
TEL: (949) 951-8808 FAX: (949) 951-3974

TITLE: NYLON TUBE SPACERS

DESIGNED:	DATE:	PART NO:	REVISION:
Michael Chen	01/13/03	9XX-XXX	K
CHECKED: D. Green	DATE: 01/13/03	CAGE CODE : 32559	SHEET # 1 OF 1

CAD GENERATED DOCUMENT, DO NOT MEASURE DRAWING.