POWR-GARD® Blocks & Holders

LF SERIES CLASS T FUSE BLOCKS

300 V • 600 V

Description

The Littelfuse Class T fuse blocks offer many advantages such as space saving design, mounting flexibility for easier installation, snap-to-release DIN rail mounts and available covers.

Features/Benefits

- Space-saving design
- Accommodates a wide range of existing mounting configurations
- One hand release from DIN rail for 30–60 A fuses
- Reinforced fuse clips are standard
- Covers available for most amperages to enhance safety
- Both hex and slot set screw options available on 60 A box lugs

Specifications

Voltage Ratings	300 V/600 V
Ampere Ratings	0–600 A
Leakage Current	<0.6 mA at 600 V
Withstand Rating	200 kA RMS SYM
Materials:	
Base	Thermoplastic
Fuse Clip	Tin plated copper alloy
Box Lug	Aluminum
Fuse Studs	Zinc plated steel
Pressure Plate	Zinc plated steel
Screw	Zinc plated steel
Flammability Rating	UL 94 V-0
Approvals	UL Listed (File: E14721) CSA Certified (File: LR7316)
Environmental	RoHS Compliant, Lead (Pb) Free

Recommended Fuses

300 V JLLN
600 V JLLS

Web Resources

Sample requests, downloadable CAD drawings and other technical information:
Littelfuse.com/lft
Littelfuse.com/fuseblocks

Ordering Information (Class T 300 V)

AMPERE RATING	POLE	ORDERING NUMBER					TORQUE	WIRE RANGE	WIRE TYPE		BASE TEMP RATING	DIN RAIL MOUNT	COVER ORDERING NUMBER*
		BASE ORDERING NUMBER	TERMINAL SUFFIX										
			BOX LUG HEX	BOX LUG SLOT	PRESSURE PLATE	SCREW							
30	1	LFT300301	—	C	—	—	5.6 N-m (50 in-lbs)	2–4 AWG	CU-AL	Solid/Stranded	125 °C	•	LFT30030FBC
	2	LFT300302					2.8 N-m (25 in-lbs)	6–14 AWG					
	3	LFT300303											
60	1	LFT300601	C-HX	C	—	—	5.6 N-m (50 in-lbs)	2–4 AWG			125 °C	•	LFT30060FBC
	2	LFT300602					2.8 N-m (25 in-lbs)	6–14 AWG					
	3	LFT300603											
100	1	LFT301001	CS	—	—	—	13.6 N-m (120 in-lbs)	2/0–6 AWG			130 °C	—	LFT30100FBC
							4.5 N-m (40 in-lbs)	8 AWG					
	3	LFT301003					4.0 N-m (35 in-lbs)	10–14 AWG					
200	1	LFT302001	CS	—	—	—	31.1 N-m (275 in-lbs)	250 kcmil-6			130 °C	—	—
	3	LFT302003											
400	1	LFT304001	CS	—	—	—	(2) 31.1 N-m (275 in-lbs)	250 kcmil-6			130 °C	—	—
	3	LFT304003											
600	1	LFT306001	CS	—	—	—	(2) 42.4 N-m (375 in-lbs)	500 kcmil-6			130 °C	—	—
	3	LFT306003											

© 2021 Littelfuse, Inc.

Downloaded from Arrow.com.

Ordering Information (Class T 600 V)

AMPERE RATING	POLES	ORDERING NUMBER					TORQUE	WIRE RANGE	WIRE TYPE		BASE TEMP RATING	DIN RAIL MOUNT	COVER ORDERING NUMBER*
		BASE ORDERING NUMBER	TERMINAL SUFFIX										
			BOX LUG HEX	BOX LUG SLOT	PRESSURE PLATE	SCREW							
30	1	LFT600301	—	C	P	S	5.6 N-m (50 in-lbs)	2–4 AWG	† see note	Solid/Stranded	125 °C	•	LFT60030FBC
	2	LFT600302					2.8 N-m (25 in-lbs)	6–14 AWG					
	3	LFT600303											
60	1	LFT600601	C-HX	C	—	—	5.6 N-m (50 in-lbs)	2–4 AWG	CU-AL		125 °C	•	LFT60060FBC
	2	LFT600602					2.8 N-m (25 in-lbs)	6–14 AWG					
	3	LFT600603											
100	1	LFT601003	CS	—	—	—	13.6 N-m (120 in-lbs)	2/0–6 AWG			130 °C	—	LT60100FBC
	3						4.5 N-m (40 in-lbs)	8 AWG					
							4.0 N-m (35 in-lbs)	10–14 AWG					
200	1	LFT602001	CS	—	—	—	31.1 N-m (275 in-lbs)	250 kcmil-6			130 °C	—	LT60200FBC
	3	LFT602003											
400	1	LFT604001	CS	—	—	—	(2) 31.1 N-m (275 in-lbs)	250 kcmil-6			130 °C	—	LT60400FBC
	3	LFT604003											
600	1	LFT606001	CS	—	—	—	(2) 42.4 N-m (375 in-lbs)	500 kcmil-6			130 °C	—	LT60600FBC
	3	LFT606003											

** Covers sold individually. One cover needed for each pole.*
† Wire type for pressure plate and screw terminal is CU only

© 2021 Littelfuse, Inc.

Downloaded from Arrow.com.

Dimensions mm (inches)

300 V 30 A

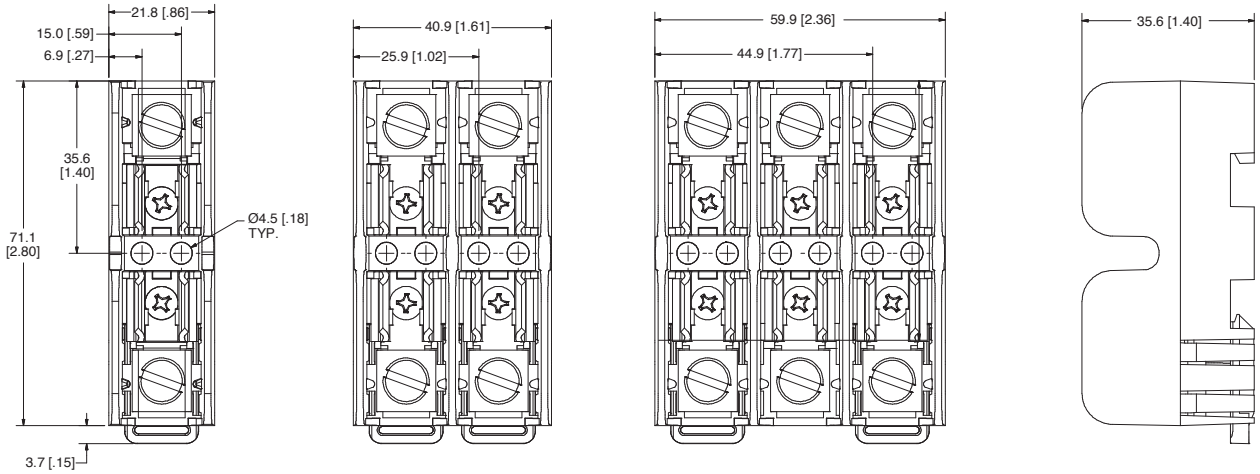

300 V 60 A

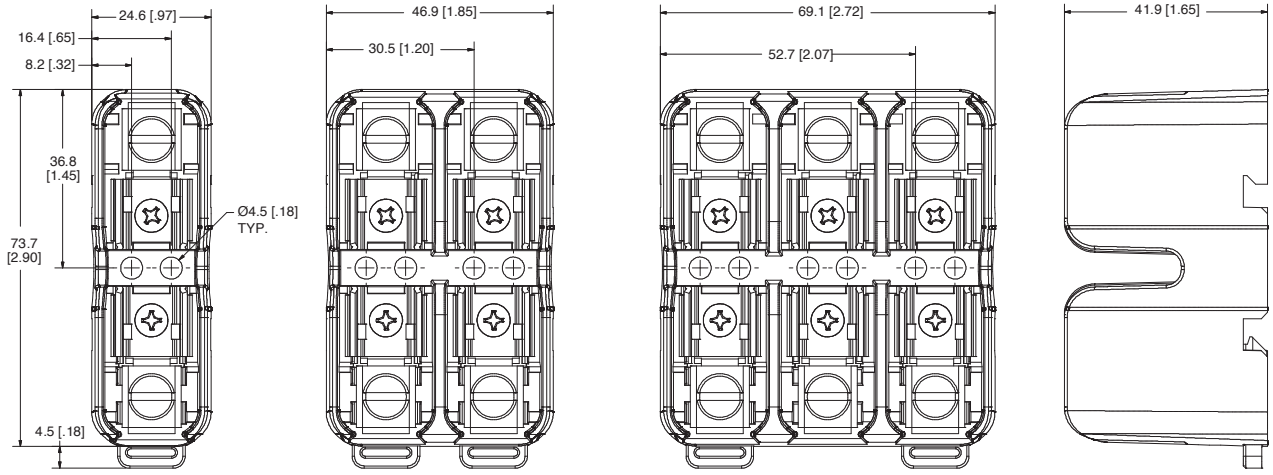

300 V 100 A

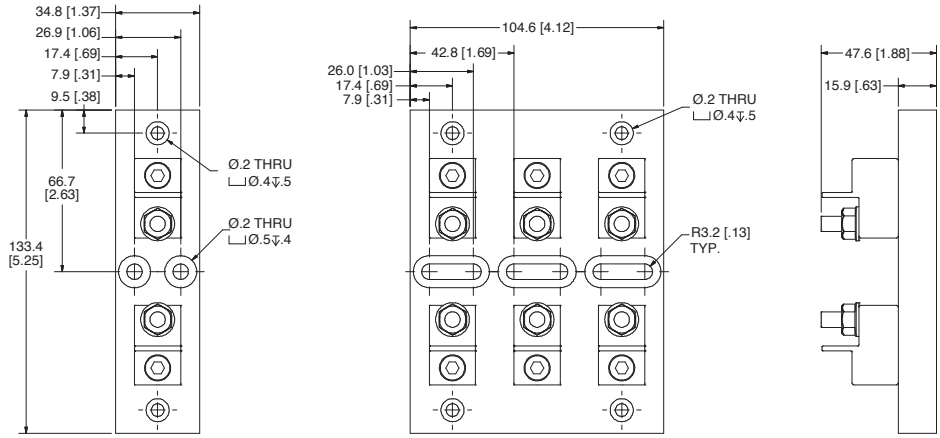

© 2021 Littelfuse, Inc.

Downloaded from Arrow.com.

Dimensions mm (inches)

300 V 200 A

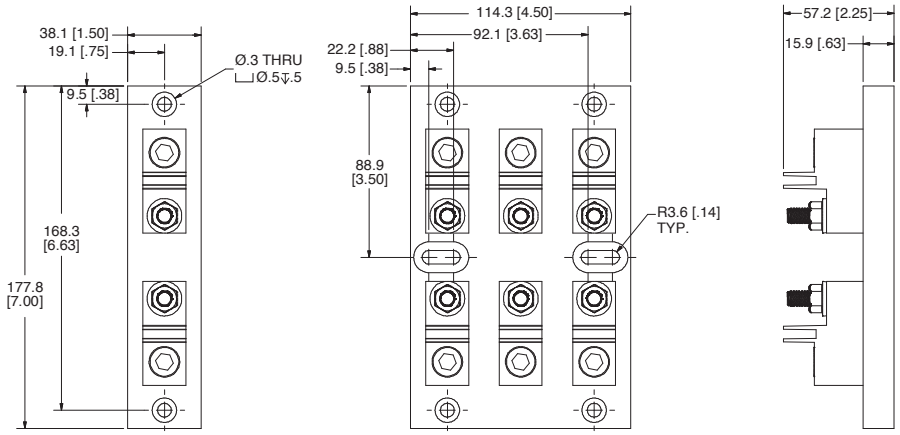

300 V 400 A

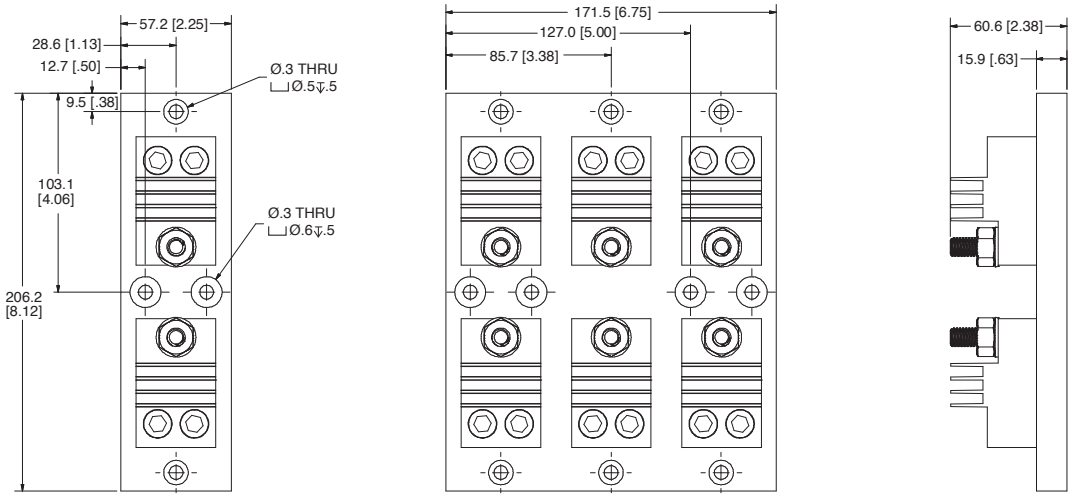

300 V 600 A

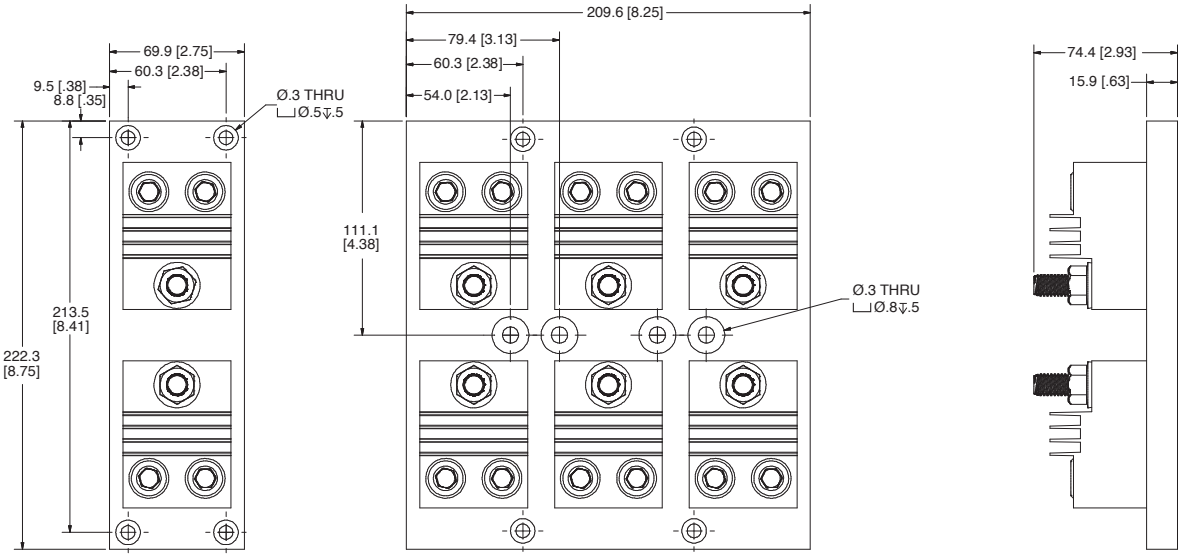

© 2021 Littelfuse, Inc.

Downloaded from Arrow.com.

Dimensions mm (inches)

600 V 30 A

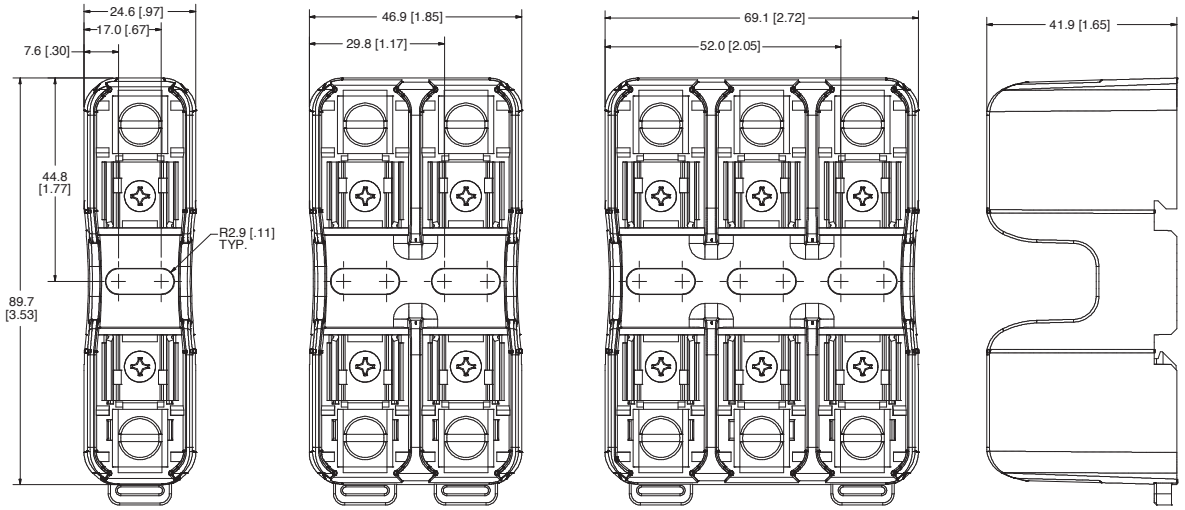

600 V 60 A

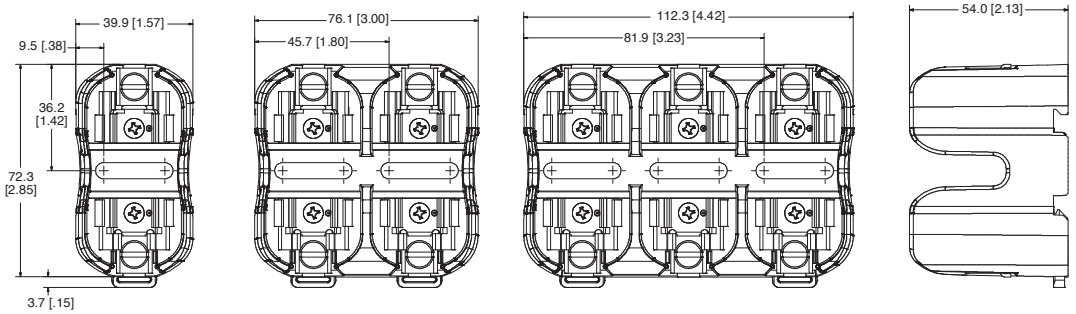

600 V 100 A

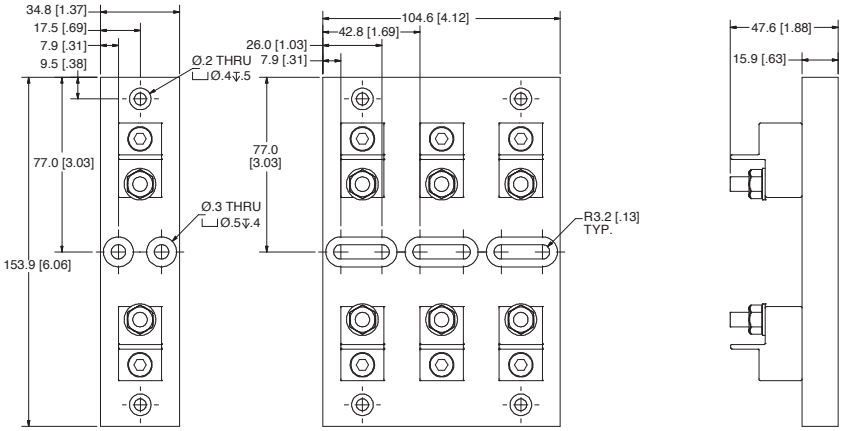

© 2021 Littelfuse, Inc.

Downloaded from Arrow.com.

Dimensions mm (inches)

600 V 200 A

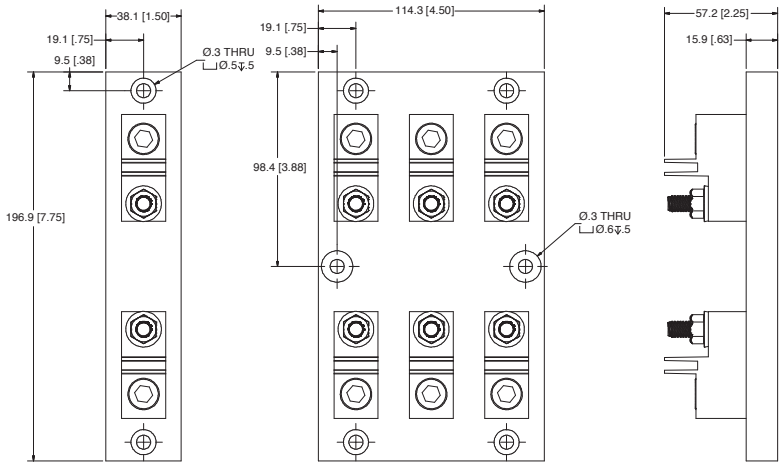

600 V 400 A

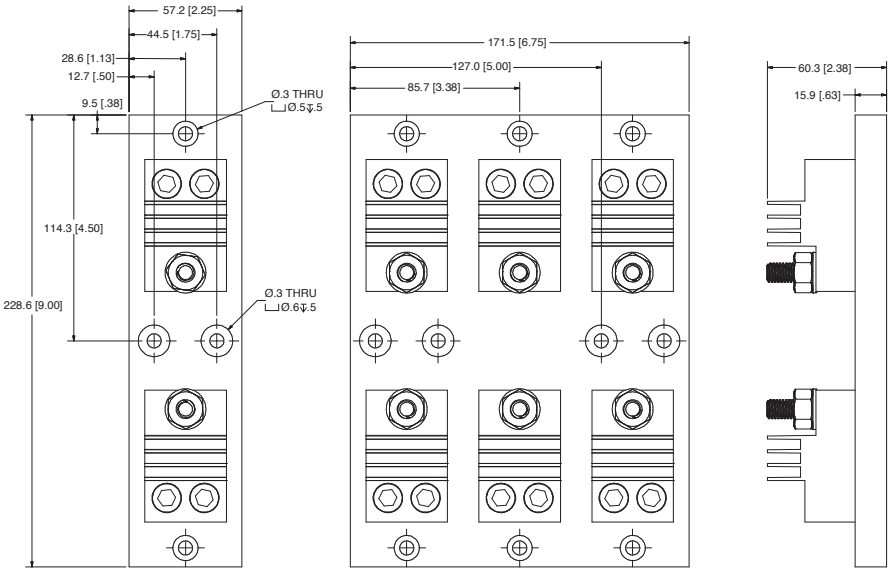

600 V 600 A

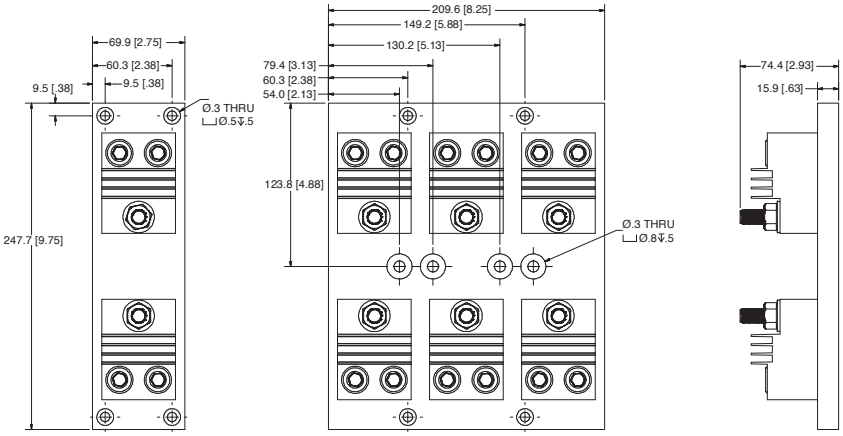

Disclaimer Notice - Information furnished is believed to be accurate and reliable. However, users should independently evaluate the suitability of and test each product selected for their own applications. Littelfuse products are not designed for, and may not be used in, all applications. **Read complete Disclaimer Notice at www.littelfuse.com/product-disclaimer.**

© 2021 Littelfuse, Inc.

Downloaded from Arrow.com.