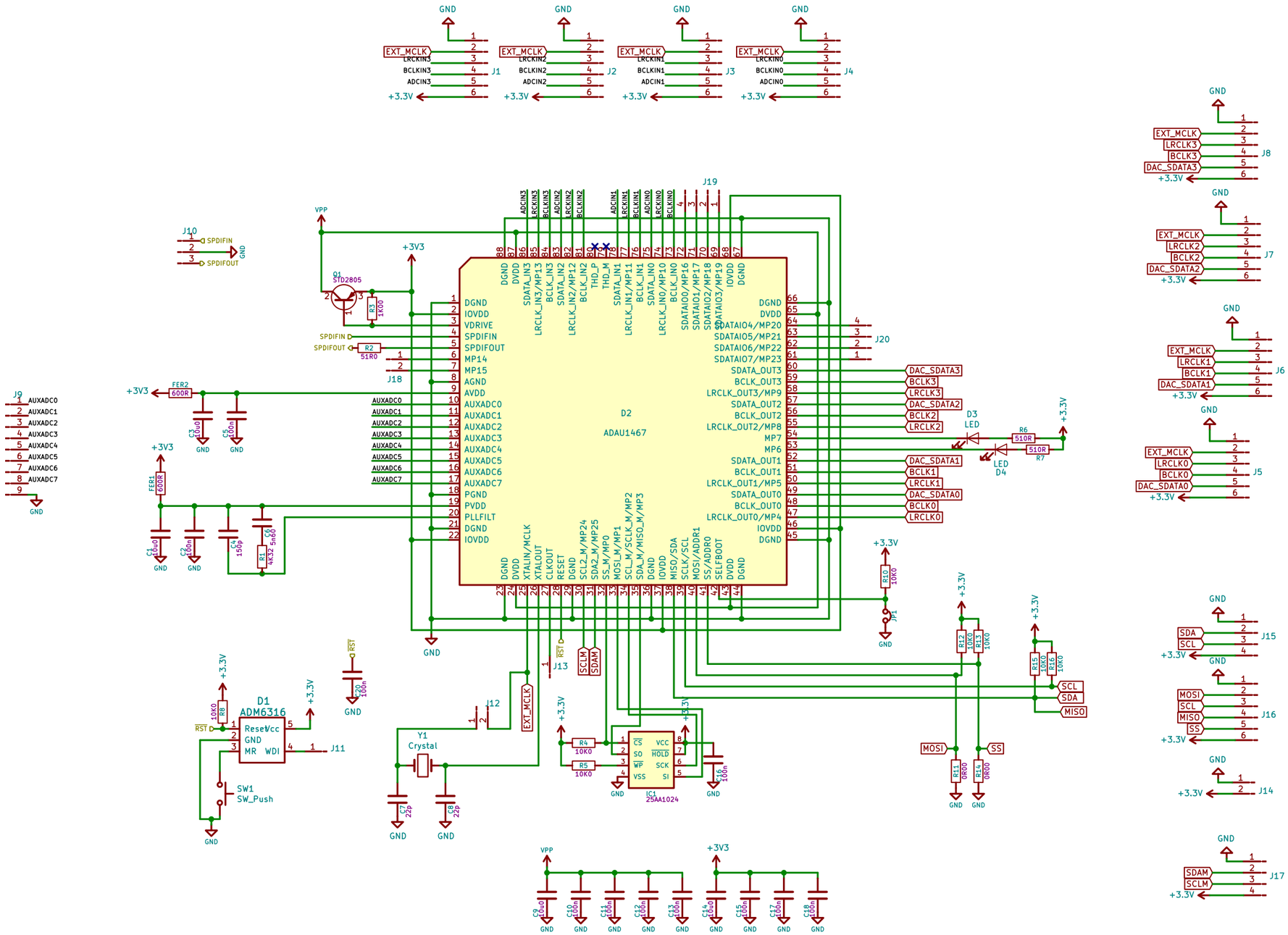
D2
ADAU1467
J19
J20
J18
J1
J2
J3
J4
J8
J7
J6
J5
J15
J16
J14
J17
J9
J10
J11
J12
J13
D1
ADM6316
SW1
SW_Push
Y1
Crystal
IC1
25AA1024
Q1
STD2805
D3
LED
D4
LED
EXT_MCLK
DAC_SDATA3
DAC_SDATA2
DAC_SDATA1
DAC_SDATA0
SPDIFIN
SPDIFOUT
AUXADC0
AUXADC1
AUXADC2
AUXADC3
AUXADC4
AUXADC5
AUXADC6
AUXADC7
SCL
SDA
MISO
MOSI
SS
SCLM
SDAM
GND
+3.3V
VPP