Compact Direct Operated
2/3 Port Solenoid Valve for Chemicals

★ **Wetted part material:**

Body/Plate

PEEK

Diaphragm

Choice of

EPDM, FKM, FFKM

★ **Service life: 10 million cycles or more**

(Based on SMC test conditions)

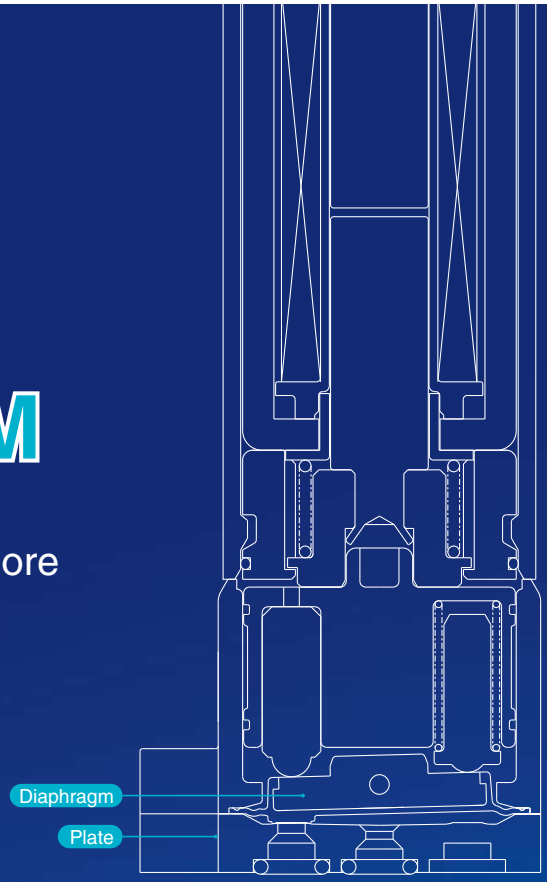

More variations!

New
Orifice diameter
1.1 mm

Orifice diameter
1.4 mm

New
Orifice diameter
1.6 mm

New
Orifice diameter
2 mm

Series ***LVM***

SMC

CAT.EUS70-30B-UK

Meeting the most advanced needs of process control

Compact Direct Operated 2/3 Port

○ Valve chamber volume

Unit: μℓ

Series	LVM09/090	LVM10 (For LVM11)	LVM10/100	LVM15/150	LVM20/200
Valve chamber volume	18	11	20	50	84

○ Change in volume depending on the open/closed status of the valve (pumping volume)

0.01 μℓ or less (Rocker type)

"Pumping volume" refers to the volume of water that is expelled from the valve chamber by the opening and closing action of the valve (once, with no applied pressure).

With a normal diaphragm valve, because the valve chamber volume varies depending on the ON or OFF status, a difference in volume is discharged into the outlet side of the valve when the valve is switched from ON to OFF. However, with a rocker type valve, there is almost no change in volume, thus no fluid is discharged into the outlet side of the valve.

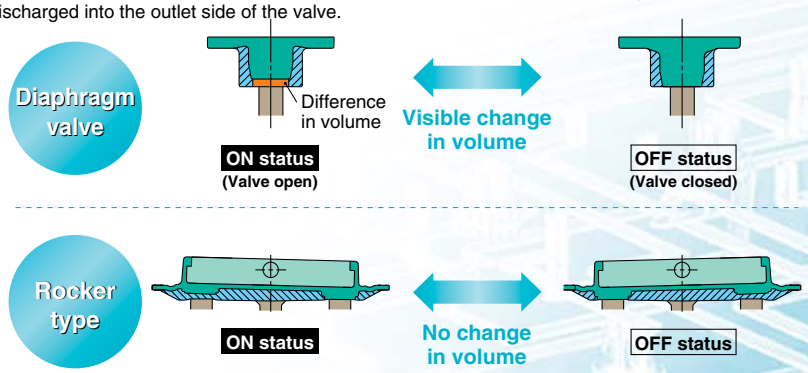

○ Type with power-saving circuit can be selected.

Holding power consumption can be reduced substantially.

Unit: W

Series		LVM09/090	LVM10/100	LVM15/150	LVM20/200
Power consumption	Inrush	3.3	2.5	5.5	4
	Holding	0.9	1	1	0.6

○ Space-saving

Unit: mm

Series	LVM090	LVM10/100	LVM150	LVM200
Valve width	9.5	13	16	20
Manifold pitch	10.5	14	17	21

Refer to 10 in "Design and Selection" on back page 2 if the valve is to be energised continuously for extended periods of time, or used with a manifold.

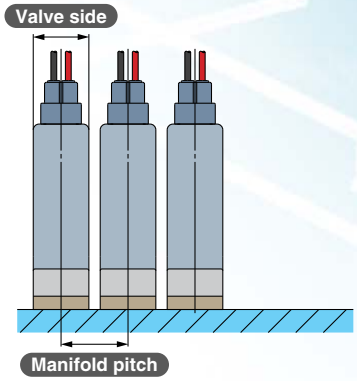

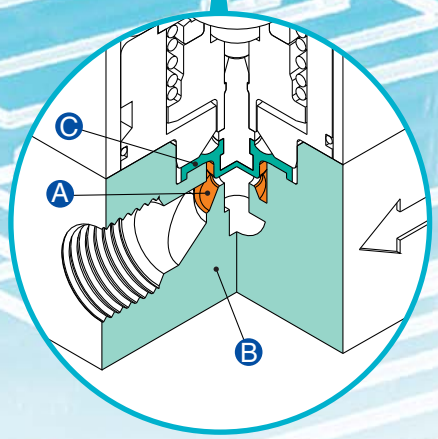

LVM11

○ Applications: Various analytical and inspection equipment

Analytical instruments for blood, urine, immune system, etc.

Solenoid Valve for Chemicals

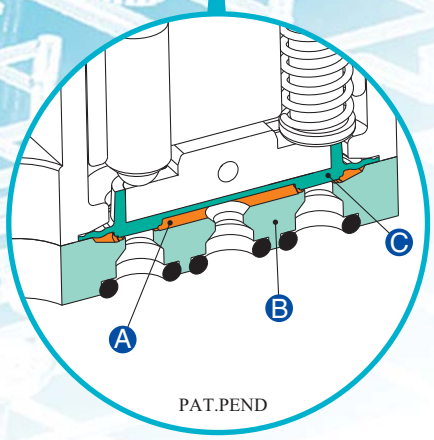

LVM□□□
(Rocker type)

- Ⓐ Valve chamber volume
- Ⓑ Body/Plate material: PEEK
- Ⓒ Diaphragm material: EPDM, FKM or FFKM

Piping/Mounting Variations

Body ported

- M5 thread
- Tubing type

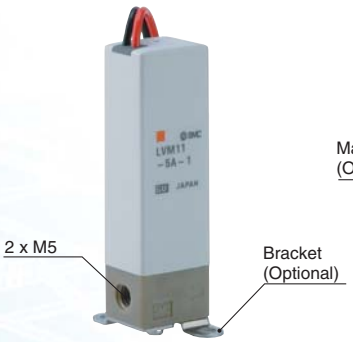

LVM11

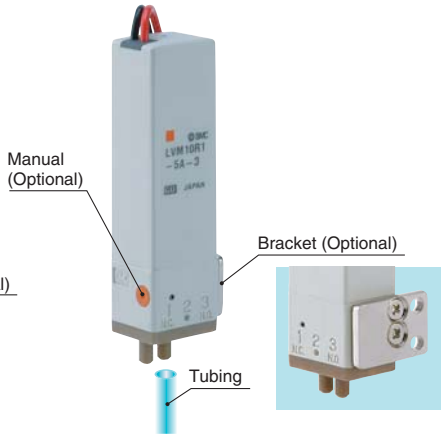

LVM10/100

Base mounted

- Without sub-plate

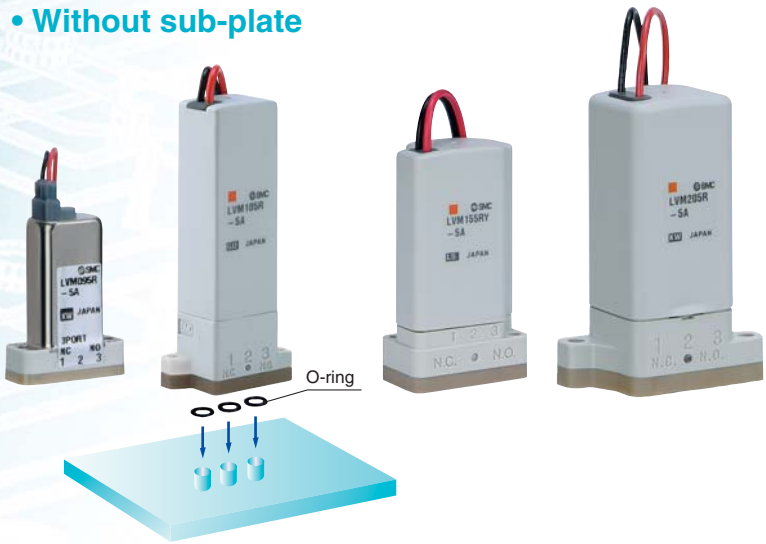

LVM09/090 LVM10/100 LVM15/150 LVM20/200

- With sub-plate

LVM10/100

Series Variations

	Model	Valve construction	Valve type	Number of ports	Operating pressure range	Orifice diameter (mm)	Valve width
	**LVM09R3**	Diaphragm type direct operated poppet (Rocker type)	N.C.	2	–75 kPa to 0.2 MPa	1.1	9.5
	LVM09R4		N.O.				
	LVM095R		Universal	3			
	**LVM11**	Diaphragm type direct operated poppet	N.C.	2	0 to 0.25 MPa	1.5	13
	**LVM10R1**	Diaphragm type direct operated poppet (Rocker type)	N.C.	2	–75 kPa to 0.25 MPa	1.4	13
	LVM10R2		N.O.				
	LVM102R		Universal	3			
	**LVM10R3**		N.C.	2	–75 kPa to 0.25 MPa	1.4	13
	LVM10R4		N.O.				
	LVM10R6		N.C.				
	LVM105R		Universal	3			
	**LVM15R3**		N.C.	2	–75 kPa to 0.25 MPa (0 to 0.6 MPa)	1.6 (1)	16
	LVM15R4		N.O.				
	LVM155R		Universal	3			
	**LVM20R3**		N.C.	2	–75 kPa to 0.3 MPa	2	20
	LVM20R4		N.O.				
	LVM205R		Universal	3			

	Flow characteristics				Fluid temperature (°C)	Volume of valve chamber	Weight (g)	Power con-sumption (W)	Page
	Water		Air						
	Av	Cv	C	b					
	0.43×10^{-6}	0.018	0.06	0.2	0 to 50 (with no condensation)	18	20	2	P.1 to 3
	0.96×10^{-6}	0.04	0.13	0.22		11	30	2.5 at inrush 1 at holding	P.4 to 8
	0.72×10^{-6}	0.03	0.1	0.2		20	34	1.5	P.4 to 10
	0.72×10^{-6}	0.03	0.1	0.2		20	34	1.5	
	0.96×10^{-6} (0.36×10^{-6})	0.04 (0.015)	0.13 (0.05)	0.22 (0.2)		50	45	5.5 at inrush 1 at holding	P.11 to 13 The figures in ( ) indicate high-pressure type.
	1.56×10^{-6}	0.065	0.23	0.27		84	80	2.5	P.14 to 16

∗ The values for Av and Cv are based on JIS B 2005:1995, C and b are based on JIB B 8390:2000.

Compact Direct Operated 2/3 Port Solenoid Valve for Chemicals

Series LVM09/090

How to Order

Base Mounted LVM **09R3** [ ] – **5** **A** – [ ] – Q

Symbol

Symbol	Number of ports	Valve type	
09R3	2	N.C.	IN (Symbol 1) OUT (Symbol 2)
09R4		N.O.	IN (Symbol 3) OUT (Symbol 2)
095R	3	Universal	1 3 2

Function

–	Standard
Y1	With power-saving circuit

Coil voltage

Symbol	Voltage
5	24 VDC
6	12 VDC

Wetted part material

Symbol	Plate	Diaphragm
A	PEEK	EPDM
B	PEEK	FKM
C	PEEK	FFKM

Lead wire length

–	150 mm
3	300 mm
6	600 mm

∗ "–" cannot be selected in the case of function Y1.

Specifications

Model			Base mounted		
			LVM09R3	LVM09R4	LVM095R
Valve construction			Diaphragm type direct operated poppet (Rocker type)		
Valve type			N.C.	N.O.	Universal
Number of ports			2		3
Fluid Note 1)			Air, Water, Pure water, Diluent, Cleaning solvent		
Operating pressure range			–75 kPa to 0.2 MPa		
Orifice diameter			1.1 mm		
Response time			10 ms or less (at pneumatic pressure)		
Leakage			Zero leakage, either external or internal (at water pressure)		
Proof pressure Note 2)			0.3 MPa		
Ambient temperature			0 to 50°C		
Fluid temperature			0 to 50°C (with no condensation)		
Volume of valve chamber Note 3)			18 μL		
Mounting orientation Note 4)			Free		
Enclosure			IP40 or equivalent		
Weight			20 g		
Rated voltage			12, 24 VDC		
Allowable voltage fluctuation Note 5)			±10% of rated voltage		
Type of coil insulation			Class B		
Power consumption (When rated voltage is at 24 V)	**Standard**		2 W (0.08 A)		
	With power-saving circuit	**Inrush**	3.3 W (0.14 A)		
		Holding	0.9 W		
Coil switching noise Note 6)			50 dB		

Note 1) Select an appropriate material for the wetted part when fluids such as a cleaning solvents are used. Also, be sure to confirm the fluid compatibility in advance.
Note 2) Indicates the pressure which does not generate breakage, cracks or external leakage after a one-minute airtight test.
Note 3) Indicates the volume of clearance inside the valve chamber after the volume of the diaphragm is subtracted.
Note 4) Since the body (orifice shape) is designed to eliminate residual liquid, mounting in a vertical direction with the coil at the top is recommended. When residual liquid is not considered, any mounting orientation is available.
Note 5) When the response speed is regarded as important, prevent negative fluctuation of the voltage by adequate regulation.
Note 6) The value is based on SMC's measurement conditions. The noise level will vary with conditions.
Note 7) Refer to 10 in "Design and Selection" on back page 2 if the valve is to be energised continuously for extended periods of time.

Flow Characteristics

Water		Air	
Av	Cv	C	b
0.43×10^{-6}	0.018	0.06	0.2

∗ The values for Av and Cv are based on JIS B 2005:1995, C and b are based on JIB B 8390:2000.

Construction: Base Mounted

LVM09R3

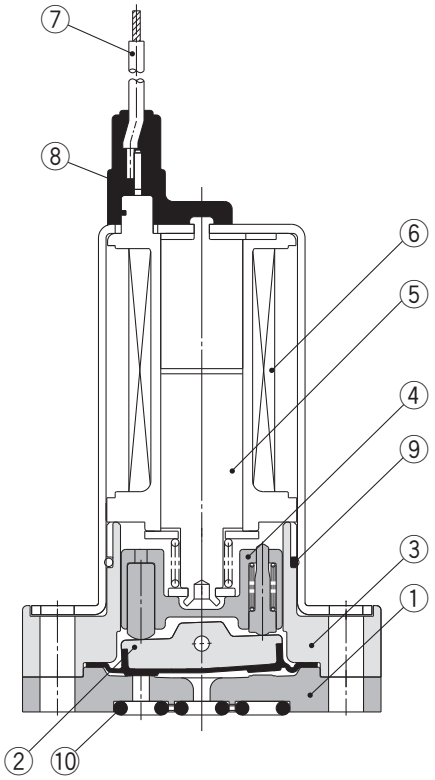

LVM09R4

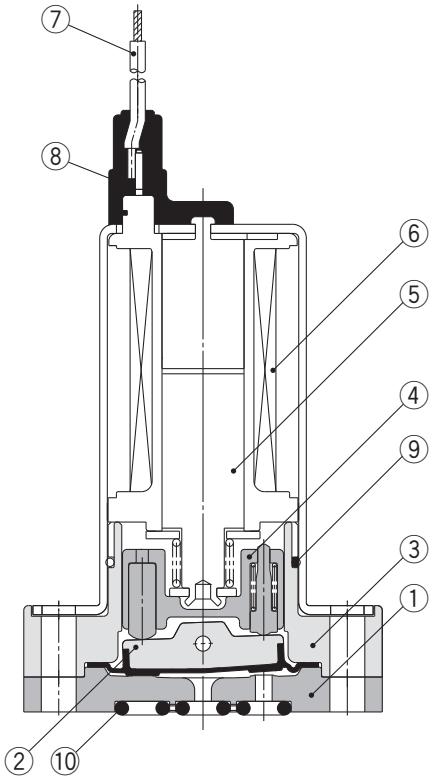

LVM095R

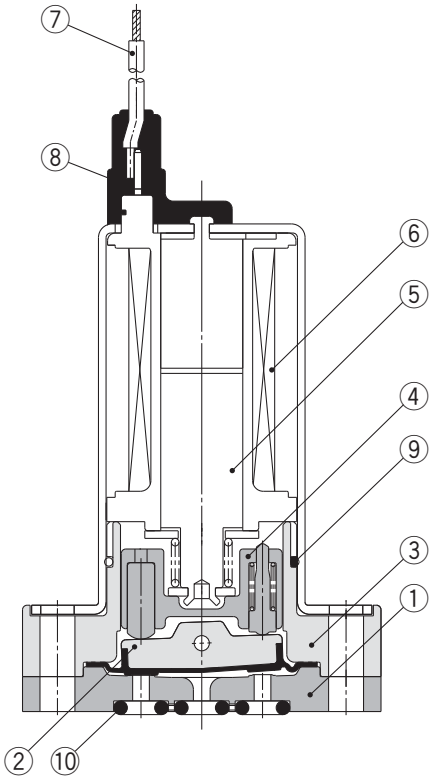

Component Parts: LVM09R3, 09R4, 095R

No.	Description	Material
1	**Plate**	PEEK
2	**Diaphragm assembly**	EPDM/FKM/FFKM
3	**Body**	PBT
4	**Slide bushing assembly**	PPS/Stainless steel
5	**Armature assembly**	—
6	**Coil assembly**	—
7	**Lead wire**	—
8	**Mold**	PET
9	**O-ring**	NBR
10	**Interface gasket**	EPDM/FKM/FFKM

Dimensions: Base Mounted

LVM09R3
LVM09R4
LVM095R

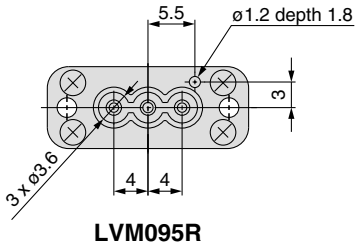

LVM095R

∗ The broken lines indicate "with power-saving circuit".

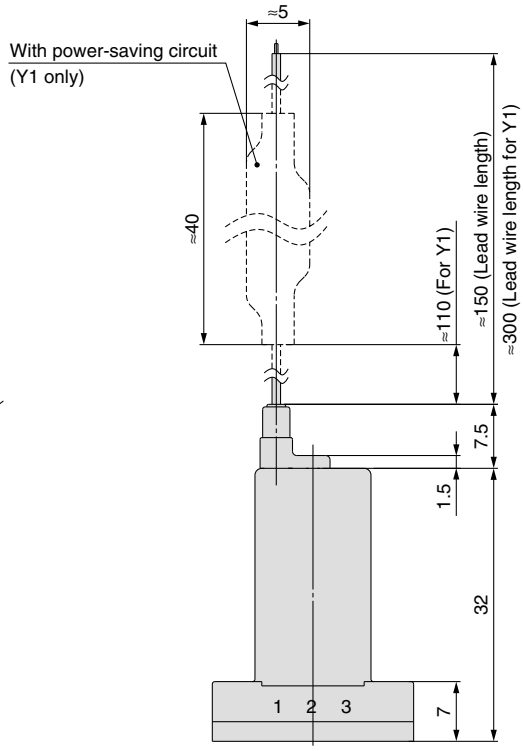

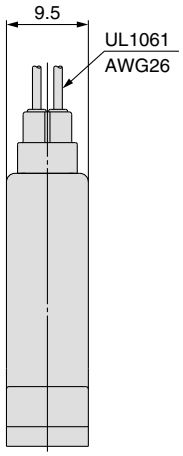

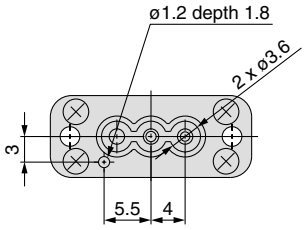

LVM09R4

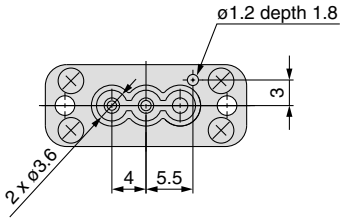

LVM09R3

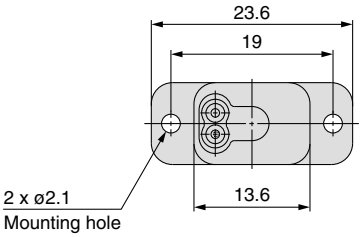

Recommended interface dimensions

∗ Surface roughness = Rz3.2 or less

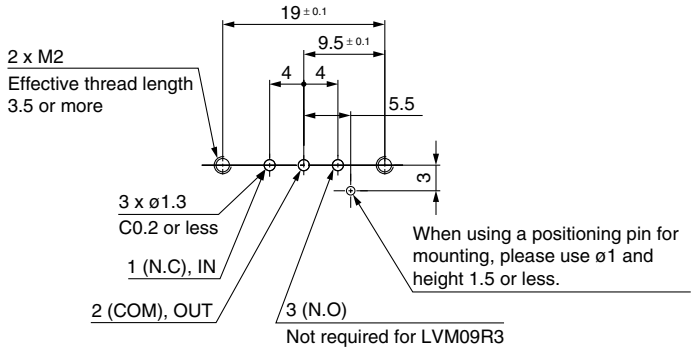

LVM09R3, LVM095R

∗ Surface roughness = Rz3.2 or less

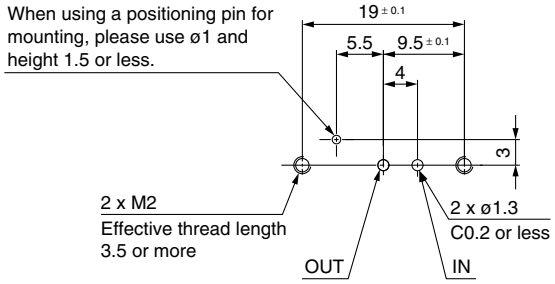

LVM09R4

Compact Direct Operated
2/3 Port Solenoid Valve for Chemicals
Series LVM10/100

How to Order

Symbol

Symbol	Number of ports	Valve type		Connection
11	2	N.C.	OUT IN	M5 thread
10R1	2	N.C.	IN (Symbol 1) OUT (Symbol 2)	Tubing type
10R2	2	N.O.	IN (Symbol 3) OUT (Symbol 2)	Tubing type
102R	3	Universal	1 3 2	Tubing type

Wetted part material

Symbol	Plate	Diaphragm
A	PEEK	EPDM
B	PEEK	FKM
C	PEEK	FFKM

Option

–	None
1	Bracket
2	Manual override
3	Bracket, Manual override

∗ Only Option 1 can be selected for LVM11

Body Ported LVM **11** □ – **5** **A** —— □ – □ – **Q**

Base Mounted LVM **10R3** □ – **5** **A** **1** – □ – □ – **Q**

Symbol

Symbol	Number of ports	Valve type		
10R3	2	N.C.	IN (Symbol 1) OUT (Symbol 2)	
10R4	2	N.O.	IN (Symbol 3) OUT (Symbol 2)	
10R6	2	N.C.	IN (Symbol 1) OUT (Symbol 3)	
105R	3	Universal	1 3 2	

Function

–	Standard
Y	With power-saving circuit

∗ For LVM11, the type with power-saving circuit is standard.

Coil voltage

Symbol	Voltage
5	24 VDC
6	12 VDC

Wetted part material

Symbol	Plate	Diaphragm
A	PEEK	EPDM
B	PEEK	FKM
C	PEEK	FFKM
E	PFA	EPDM
F	PFA	FKM
G	PFA	FFKM

Lead wire length

–	300 mm
6	600 mm
10	1000 mm

Option

–	None
1	Bracket
2	Manual override
3	Bracket, Manual override

∗ Without a sub-plate, a bracket cannot be attached.

Sub-plate material/Port size

–	Without sub-plate	
1∗	PVDF	M6
1U∗	PVDF	1/4-28UNF
2	PFA	M6
2U	PFA	1/4-28UNF

∗ Combinations with wetted part materials E, F, G are not available.

Body ported

Body ported (Tubing type)

Base mounted (Without sub-plate)

Base mounted (With sub-plate)

Specifications

Model			Body ported	Body ported (Tubing type)			Base mounted			
			LVM11	LVM10R1	LVM10R2	LVM102R	LVM10R3	LVM10R4	LVM10R6	LVM105R
Valve construction			Diaphragm type direct operated poppet	Diaphragm type direct operated poppet (Rocker type)						
Valve type			N.C.	N.C.	N.O.	Universal	N.C.	N.O.	N.C.	Universal
Number of ports			2	2		3	2			3
Fluid Note 1)			Air, Water, Pure water, Diluent, Cleaning solvent							
Operating pressure range			0 to 0.25 MPa	–75 kPa to 0.25 MPa						
Orifice diameter			1.5 mm	1.4 mm						
Response time			10 ms or less (at pneumatic pressure)							
Leakage			Zero leakage, either external or internal (at water pressure)							
Proof pressure Note 2)			0.38 MPa							
Ambient temperature			0 to 50°C							
Fluid temperature			0 to 50°C (with no condensation)							
Volume of valve chamber			11 μL	20 μL						
Mounting orientation			Free							
Enclosure			IP40 or equivalent							
Weight			30 g	34 g (without sub-plate), 42 g (with sub-plate)						
Rated voltage			12, 24 VDC							
Allowable voltage fluctuation Note 5)			±10% of rated voltage							
Type of coil insulation			Class B							
Power consumption (When rated voltage is at 24 V)	**Standard**		—	1.5 W (0.06 A)						
	With power-saving circuit	**In-rush**	2.5 W (0.1 A)							
		Holding	1 W							
Coil switching noise Note 5)			50 dB							

Note 1) Select an appropriate material for the wetted part when fluids such as a cleaning solvents are used. Also, be sure to confirm the fluid compatibility in advance.
Note 2) Indicates the pressure which does not generate breakage, cracks or external leakage after a one-minute airtight test.
Note 3) Indicates the volume of clearance inside the valve chamber after the volume of the diaphragm is subtracted.
Note 4) Since the body (orifice shape) is designed to eliminate residual liquid, mounting in a vertical direction with the coil at the top is recommended. When residual liquid is not considered, any mounting orientation is available.
Note 5) When the response speed is regarded as important, prevent negative fluctuation of the voltage by adequate regulation.
Note 6) The value is based on SMC's measurement conditions. The noise level will vary with conditions.
Note 7) Refer to 10 in "Design and Selection" on back page 2 if the valve is to be energised continuously for extended periods of time.

Flow Characteristics

Valve construction	Water		Air	
	Av	Cv	C	b
Direct operated poppet	0.96×10^{-6}	0.04	0.13	0.22
Rocker type	0.72×10^{-6}	0.03	0.1	0.2

∗ The values for Av and Cv are based on JIS B 2005:1995, C and b are based on JIB B 8390:2000.

Construction: Body Ported

LVM11

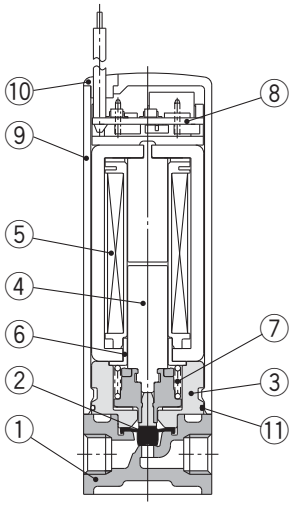

Component Parts: LVM11

No.	Description	Material
1	**Body**	PEEK
2	**Diaphragm assembly**	EPDM/FKM/FFKM
3	**Spacer**	PBT
4	**Armature assembly**	Stainless steel/POM
5	**Coil assembly**	—
6	**Sleeve**	SUY (iron)
7	**Return spring**	Stainless steel
8	**Board assembly**	—
9	**Casing**	PBT
10	**Plug**	NBR
11	**O-ring**	NBR

LVM10R1

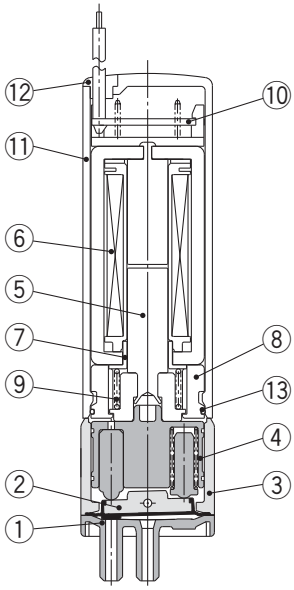

LVM10R2

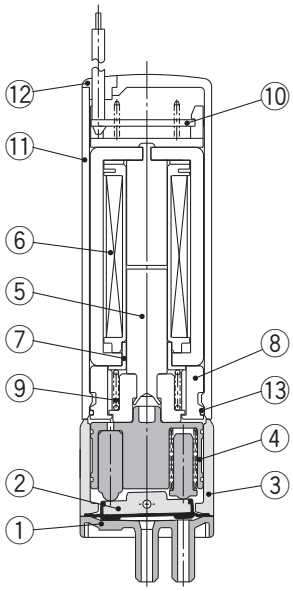

LVM102R

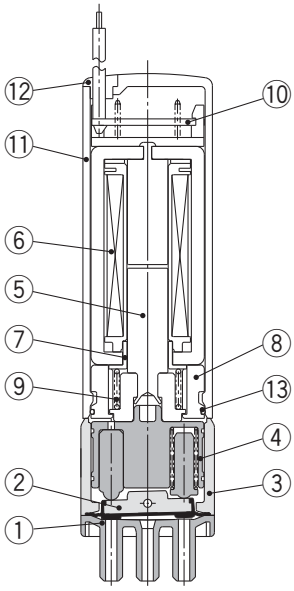

Component Parts: LVM10R1, 10R2, 102R

No.	Description	Material
1	**Plate**	PEEK
2	**Diaphragm assembly**	EPDM/FKM/FFKM
3	**Body**	PBT
4	**Slide bushing assembly**	POM/Stainless steel
5	**Armature assembly**	Stainless steel/PBT
6	**Coil assembly**	—
7	**Sleeve**	SUY (iron)
8	**Spacer**	PBT
9	**Return spring**	Stainless steel
10	**Board assembly**	—
11	**Casing**	PBT
12	**Plug**	NBR
13	**O-ring**	NBR

Construction: Base Mounted

LVM10R3

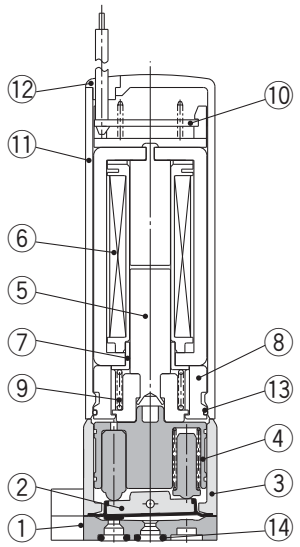

LVM10R4

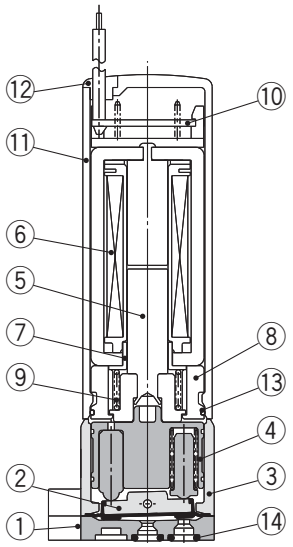

LVM10R6

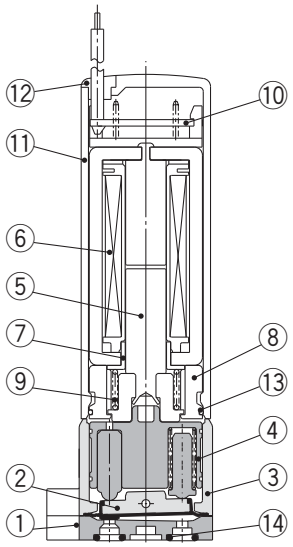

LVM105R

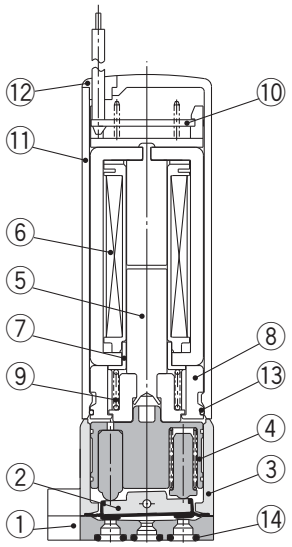

Component Parts: LVM10R3, 10R4, 10R6, 105R

No.	Description	Material
1	**Plate**	PEEK/PFA
2	**Diaphragm assembly**	EPDM/FKM/FFKM
3	**Body**	PBT
4	**Slide bushing assembly**	POM/Stainless steel
5	**Armature assembly**	Stainless steel/PBT
6	**Coil assembly**	—
7	**Sleeve**	SUY (iron)
8	**Spacer**	PBT
9	**Return spring**	Stainless steel
10	**Board assembly**	—
11	**Casing**	PBT
12	**Plug**	NBR
13	**O-ring**	NBR
14	**O-ring**	EPDM/FKM/FFKM

Dimensions: Body Ported

LVM11-□□-□ (N.C.)

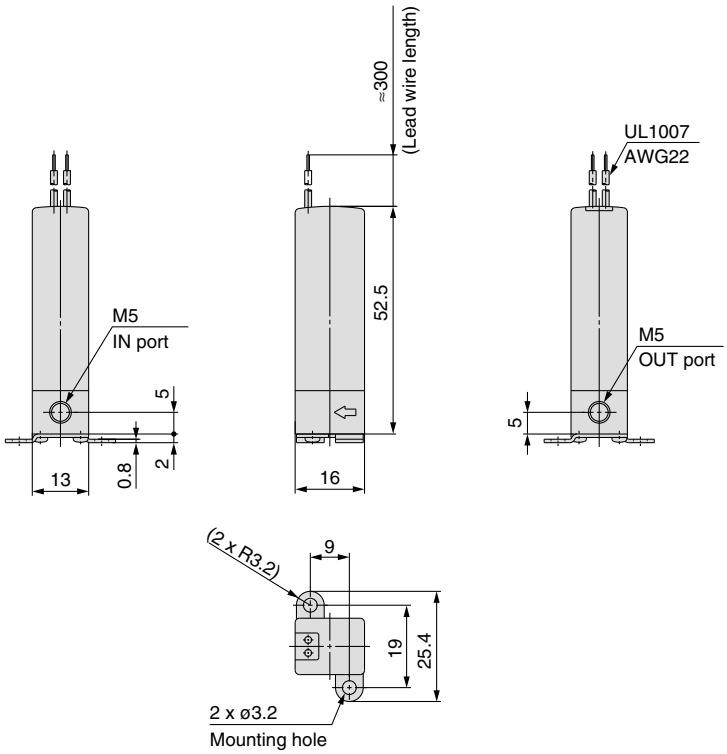

LVM10R1-□□-□ (N.C.)
LVM10R2-□□-□ (N.O.)
LVM102R-□□-□ (Universal)

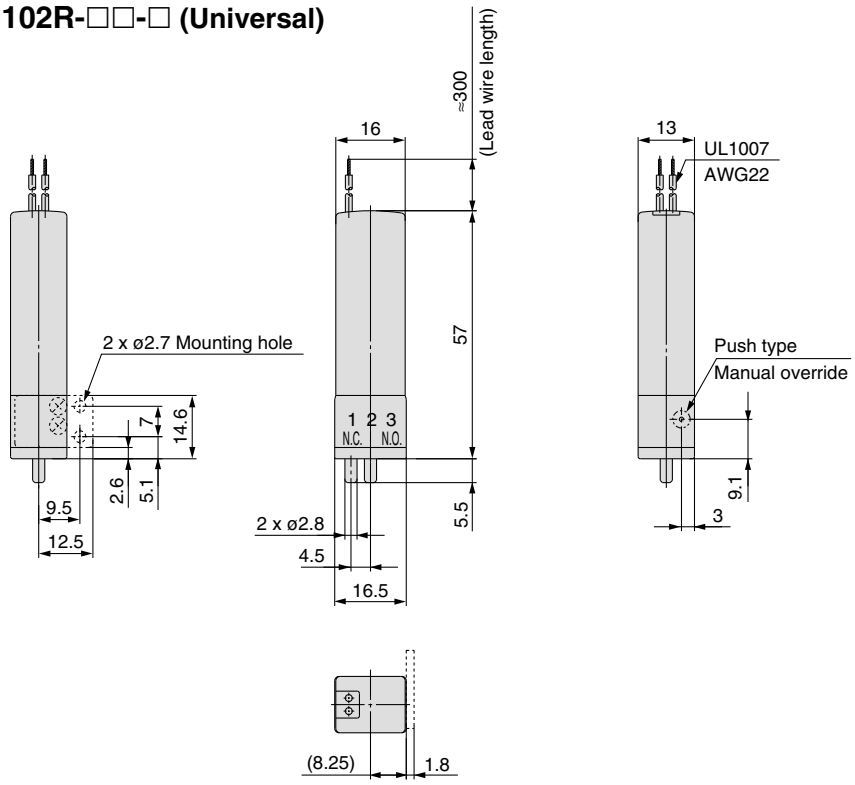

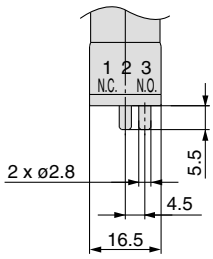

LVM10R2

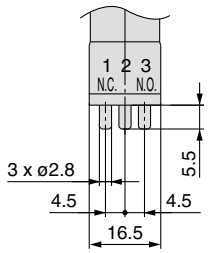

LVM102R

∗ The broken lines indicate "with bracket".

Dimensions: Base Mounted

LVM10R3-□□-□ (N.C.)
LVM10R4-□□-□ (N.O.)
LVM10R6-□□-□ (N.C.)
LVM105R-□□-□ (Universal)

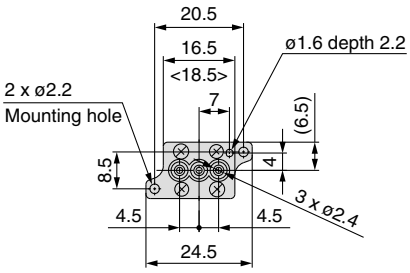

LVM105R

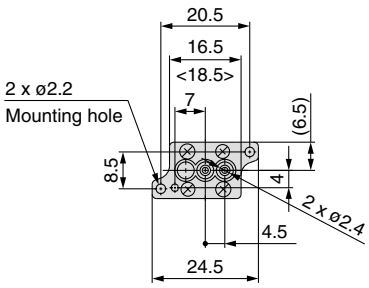

LVM10R4

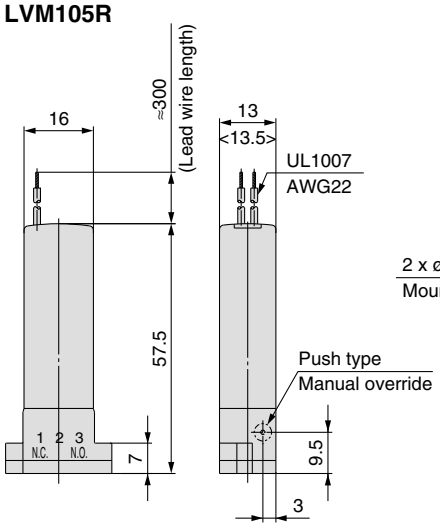

∗ Figures in brackets < > indicate the values for the PFA plate material (wetted part material "E, F, G"). In case of the PFA plate material (wetted part material "E, F, G"), there is no ø1.6 positioning hole.

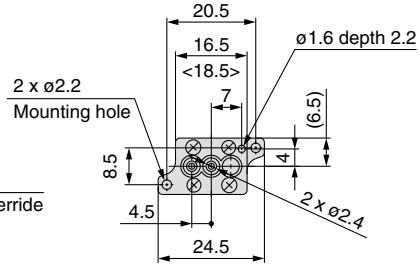

LVM10R3

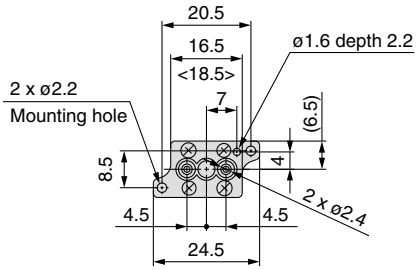

LVM10R6

Recommended interface dimensions

∗ Surface roughness = Rz3.2 or less

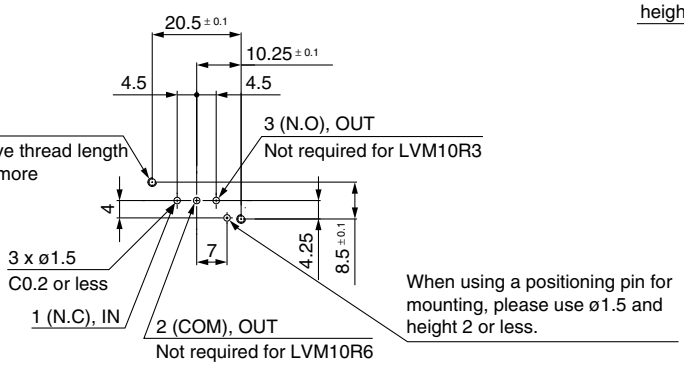

LVM10R3, LVM10R6, LVM105R

∗ Surface roughness = Rz3.2 or less

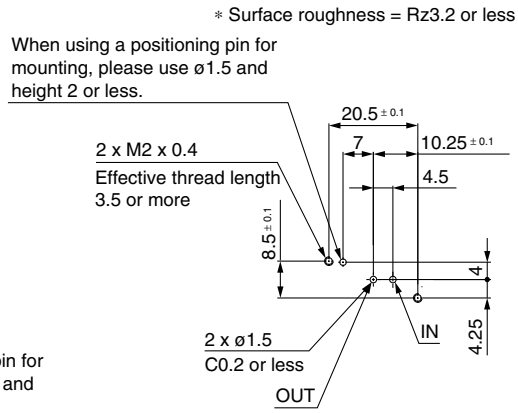

LVM10R4

Dimensions: Base Mounted

LVM10R3-□□□-□ (N.C.)
LVM10R4-□□□-□ (N.O.)
LVM10R6-□□□-□ (N.C.)
LVM105R-□□□-□ (Universal)

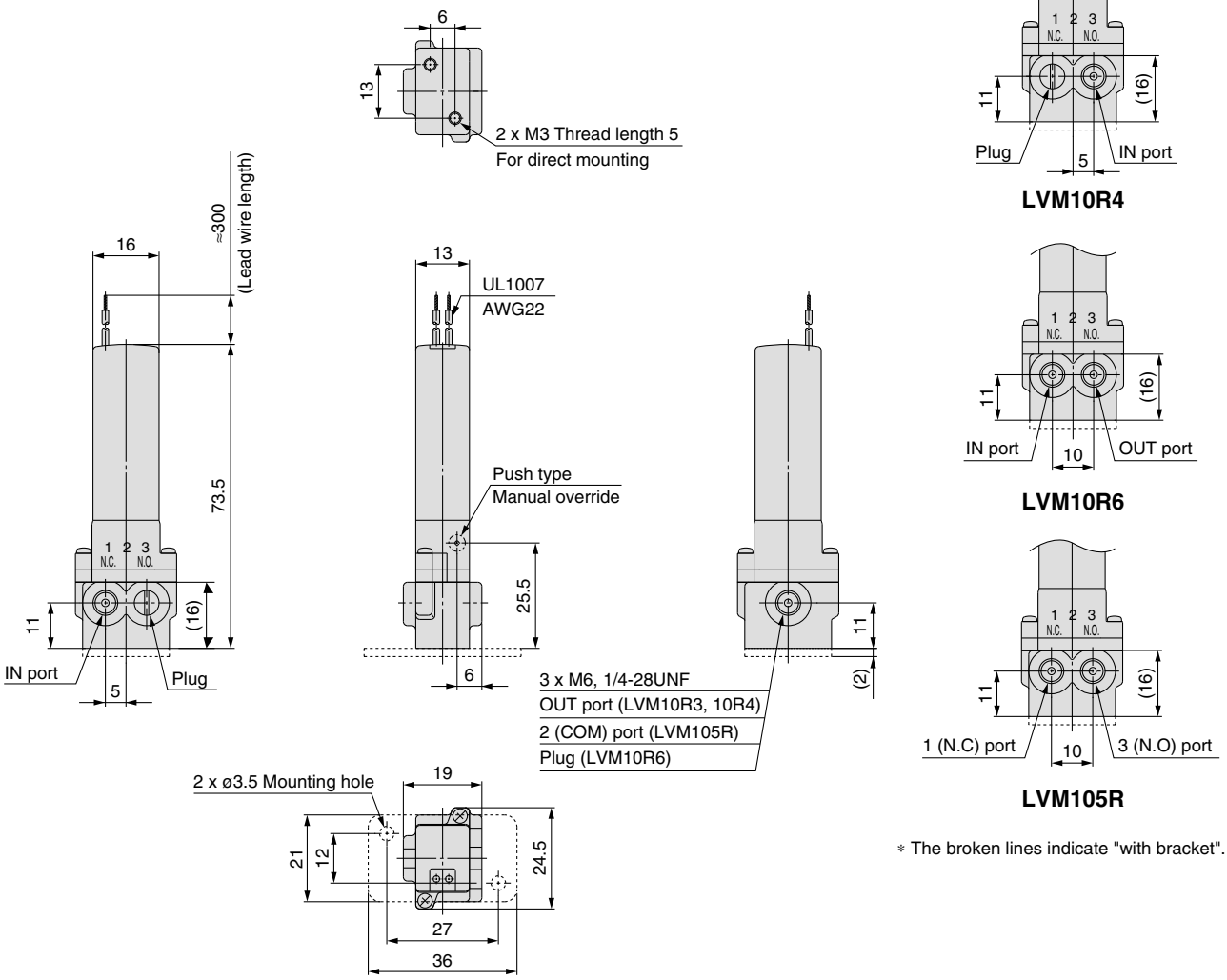

LVM10R4

LVM10R6

LVM105R

∗ The broken lines indicate "with bracket".

Compact Direct Operated
2/3 Port Solenoid Valve for Chemicals
Series LVM15/150

How to Order

Base Mounted **LVM 15R3 Y – 5 A 1 – □ – Q**

Symbol

Symbol	Number of ports	Valve type	
15R3	2	N.C.	IN (Symbol 1) OUT (Symbol 2)
15R4		N.O.	IN (Symbol 3) OUT (Symbol 2)
155R	3	Universal	1 3 2

Lead wire length

–	300 mm
6	600 mm
10	1000 mm

Sub-plate material/port size

–	Without sub-plate	
1	M6	PVDF
1U	1/4-28UNF	PVDF

Wetted part material

Symbol	Plate	Diaphragm
A	PEEK	EPDM
B	PEEK	FKM
C	PEEK	FFKM

Coil voltage

Symbol	Voltage
5	24 VDC
6	12 VDC

Function

Symbol	Specifications
Y	Standard (With power-saving circuit)
HY	High-pressure type (With power-saving circuit)

Specifications

Model		Base mounted		
		LVM15R3	**LVM15R4**	**LVM155R**
Valve construction		Diaphragm type direct operated poppet (Rocker type)		
Valve type		N.C.	N.O.	Universal
Number of ports		2		3
Fluid Note 1)		Air, Water, Pure water, Diluent, Cleaning solvent		
Operating pressure range		–75 kPa to 0.25 MPa [0 to 0.6 MPa]		
Orifice diameter		1.6 mm [1 mm]		
Response time		15 ms or less (at pneumatic pressure)		
Leakage		Zero leakage, either external or internal (at water pressure)		
Proof pressure Note 2)		0.38 MPa [0.9 MPa]		
Ambient temperature		0 to 50°C		
Fluid temperature		0 to 50°C (with no condensation)		
Volume of valve chamber Note 3)		50 μL		
Mounting orientation Note 4)		Free		
Enclosure		IP40 or equivalent		
Weight		45 g		
Rated voltage		12, 24 VDC		
Allowable voltage fluctuation Note 5)		±10% of rated voltage		
Type of coil insulation		Class B		
Power consumption (When rated voltage is at 24 V)	**Inrush**	5.5 W (0.23 A)		
	Holding	1 W		
Coil switching noise Note 6)		60 dB		

[ ] indicates high-pressure type.

Note 1) Select an appropriate material for the wetted part when fluids such as a cleaning solvents are used. Also, be sure to confirm the fluid compatibility in advance.
Note 2) Indicates the pressure which does not generate breakage, cracks or external leakage after a one-minute airtight test.
Note 3) Indicates the volume of clearance inside the valve chamber after the volume of the diaphragm is subtracted.
Note 4) Since the body (orifice shape) is designed to eliminate residual liquid, mounting in a vertical direction with the coil at the top is recommended. When residual liquid is not considered, any mounting orientation is available.
Note 5) When the response speed is regarded as important, prevent negative fluctuation of the voltage by adequate regulation.
Note 6) The value is based on SMC's measurement conditions. The noise level will vary with conditions.
Note 7) Refer to 10 in "Design and Selection" on back page 2 if the valve is to be energised continuously for extended periods of time.

Flow Characteristics

Function	Water		Air	
	Av	Cv	C	b
Standard	0.96×10^{-6} [0.36×10^{-6}]	0.04 [0.015]	0.13 [0.05]	0.22 [0.2]

∗ The values for Av and Cv are based on JIS B 2005:1995, C and b are based on JIB B 8390:2000.

Construction: Base Mounted

LVM15R3

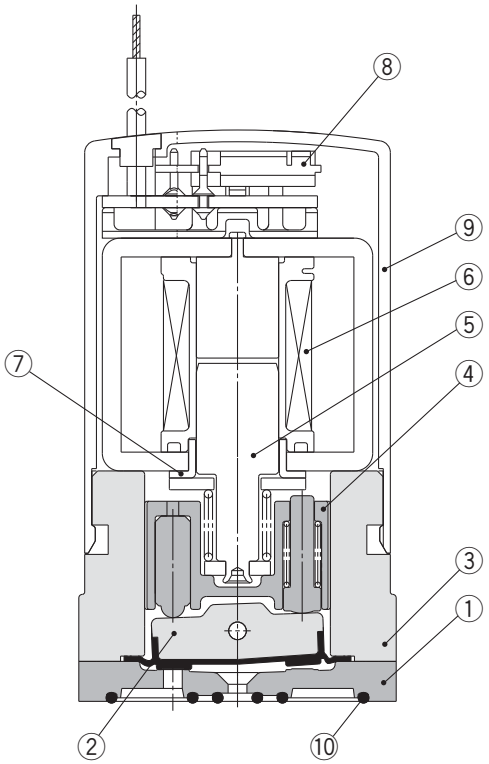

LVM15R4

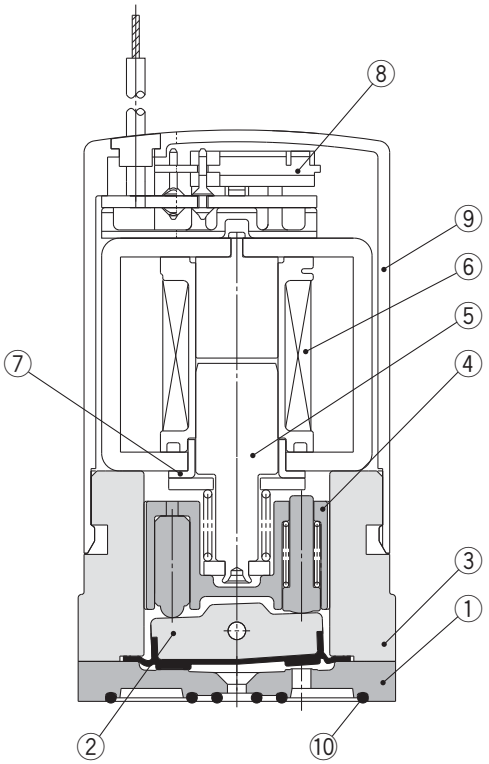

LVM155R

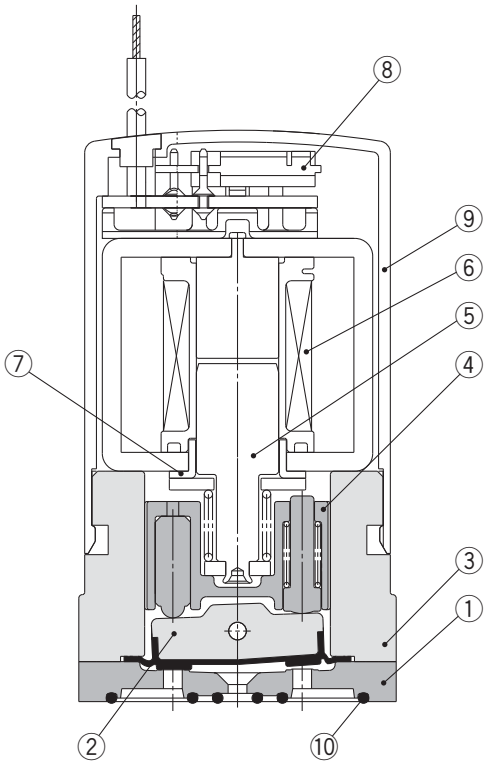

Component Parts: LVM15R3, 15R4, 155R

No.	Description	Material
1	**Plate**	PEEK
2	**Diaphragm assembly**	EPDM/FKM/FFKM
3	**Body**	PBT
4	**Slide bushing assembly**	PPS/Stainless steel
5	**Armature assembly**	—
6	**Coil assembly**	—
7	**Sleeve**	SUY (iron)
8	**Board assembly**	—
9	**Casing**	PBT
10	**Interface gasket**	EPDM/FKM/FFKM

Dimensions: Base Mounted

LVM15R3
LVM15R4
LVM155R

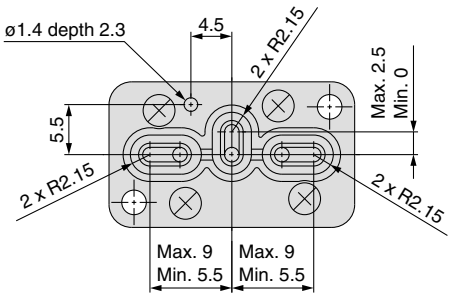

LVM155R

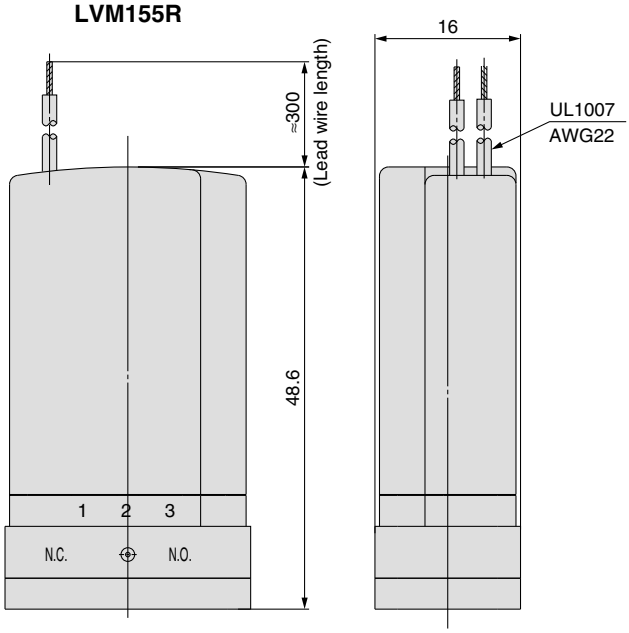

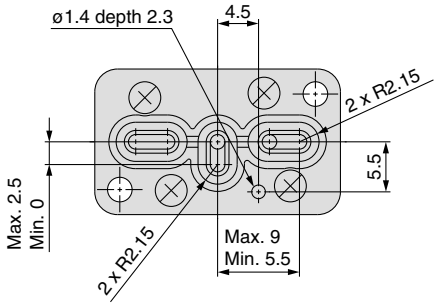

LVM15R4

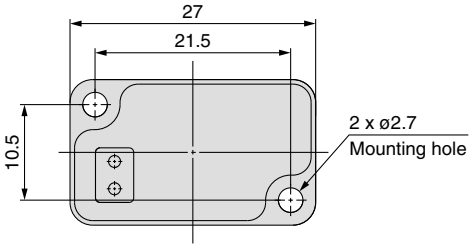

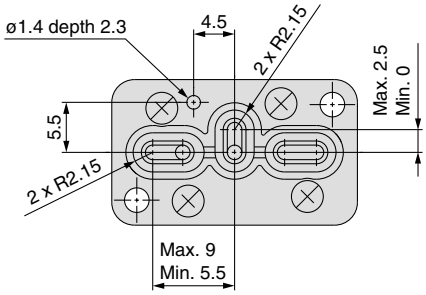

LVM15R3

Recommended interface dimensions

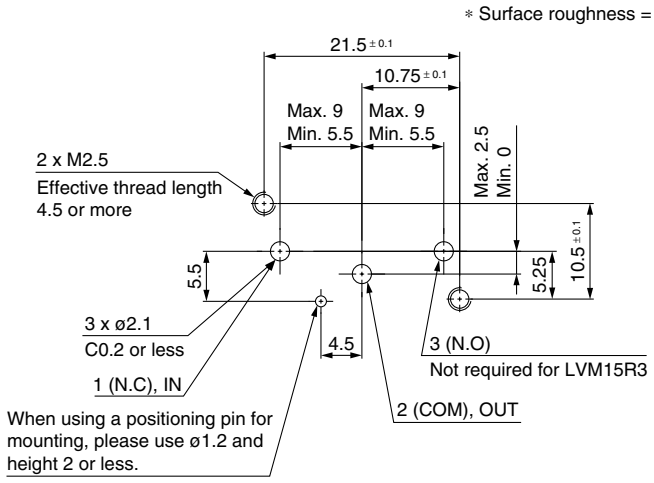

LVM155R, LVM15R3

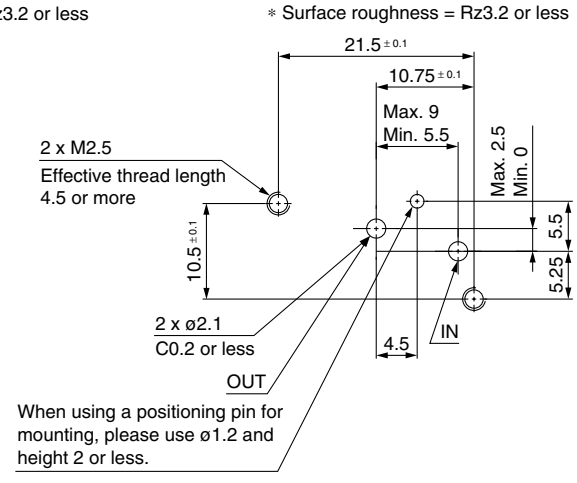

LVM15R4

Compact Direct Operated
2/3 Port Solenoid Valve for Chemicals
Series LVM20/200

How to Order

Base Mounted **LVM 20R3 □ – 5 A – □ – Q**

Symbol

Symbol	Number of ports	Valve type	
20R3	2	N.C.	IN (Symbol 1) OUT (Symbol 2)
20R4		N.O.	IN (Symbol 3) OUT (Symbol 2)
205R	3	Universal	1 3 2

Lead wire length

–	300 mm
6	600 mm
10	1000 mm

Wetted part material

Symbol	Plate	Diaphragm
A	PEEK	EPDM
B	PEEK	FKM
C	PEEK	FFKM

Coil voltage

Symbol	Voltage
5	24 VDC
6	12 VDC

Function

–	Standard
Y	With power-saving circuit

Specifications

Model			Base mounted		
			LVM20R3	**LVM20R4**	**LVM205R**
Valve construction			Diaphragm type direct operated poppet (Rocker type)		
Valve type			N.C.	N.O.	Universal
Number of ports			2		3
Fluid Note 1)			Air, Water, Pure water, Diluent, Cleaning solvent		
Operating pressure range			–75 kPa to 0.3 MPa		
Orifice diameter			2 mm		
Response time			20 ms or less (at pneumatic pressure)		
Leakage			Zero leakage, either external or internal (at water pressure)		
Proof pressure Note 2)			0.45 MPa		
Ambient temperature			0 to 50°C		
Fluid temperature			0 to 50°C (with no condensation)		
Volume of valve chamber Note 3)			84 μL		
Mounting orientation Note 4)			Free		
Enclosure			IP40 or equivalent		
Weight			80 g		
Rated voltage			12, 24 VDC		
Allowable voltage fluctuation Note 5)			±10% of rated voltage		
Type of coil insulation			Class B		
Power consumption (When rated voltage is at 24 V)	**Standard**		2.5 W (0.1 A)		
	With power-saving circuit	**Inrush**	4 W (0.17 A)		
		Holding	0.6 W		
Coil switching noise Note 6)			60 dB		

Note 1) Select an appropriate material for the wetted part when fluids such as a cleaning solvents are used. Also, be sure to confirm the fluid compatibility in advance.
Note 2) Indicates the pressure which does not generate breakage, cracks or external leakage after a one-minute airtight test.
Note 3) Indicates the volume of clearance inside the valve chamber after the volume of the diaphragm is subtracted.
Note 4) Since the body (orifice shape) is designed to eliminate residual liquid, mounting in a vertical direction with the coil at the top is recommended. When residual liquid is not considered, any mounting orientation is available.
Note 5) When the response speed is regarded as important, prevent negative fluctuation of the voltage by adequate regulation.
Note 6) The value is based on SMC's measurement conditions. The noise level will vary with conditions.
Note 7) Refer to 10 in "Design and Selection" on back page 2, if the valve is to be energised continuously for extended periods of time.

Flow Characteristics

Water		Air	
Av	Cv	C	b
1.56×10^{-6}	0.065	0.23	0.27

∗ The values for Av and Cv are based on JIS B 2005:1995, C and b are based on JIB B 8390:2000.

Construction: Base Mounted

LVM20R3

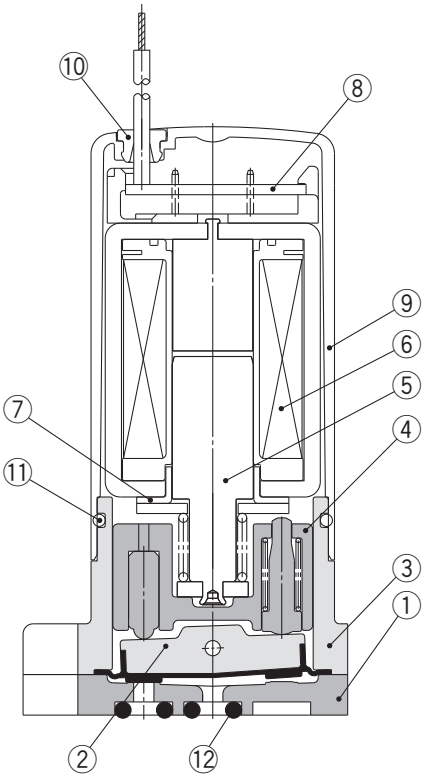

LVM20R4

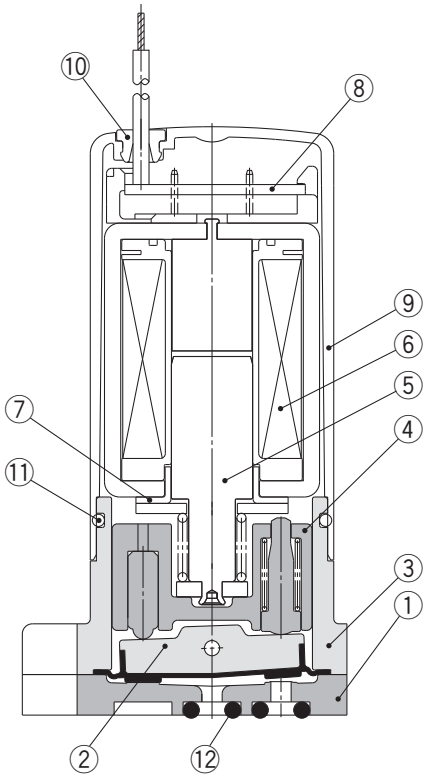

LVM205R

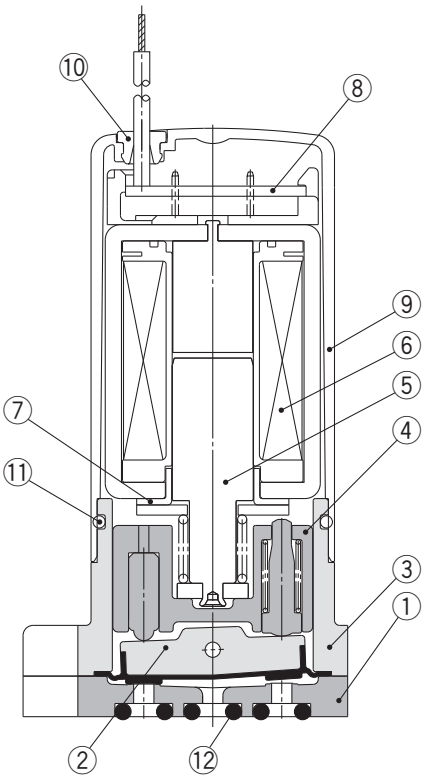

Component Parts: LVM20R3, 20R4, 205R

No.	Description	Material
1	**Plate**	PEEK
2	**Diaphragm assembly**	EPDM/FKM/FFKM
3	**Body**	PBT
4	**Slide bushing assembly**	PPS/Stainless steel
5	**Armature assembly**	—
6	**Coil assembly**	—
7	**Sleeve**	SUY (iron)
8	**Board assembly**	—
9	**Casing**	PBT
10	**Plug**	NBR
11	**O-ring**	NBR
12	**O-ring**	EPDM/FKM/FFKM

Dimensions: Base Mounted

LVM20R3
LVM20R4
LVM205R

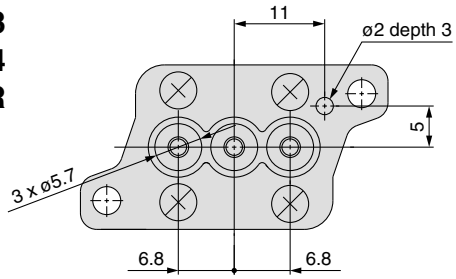

LVM205R

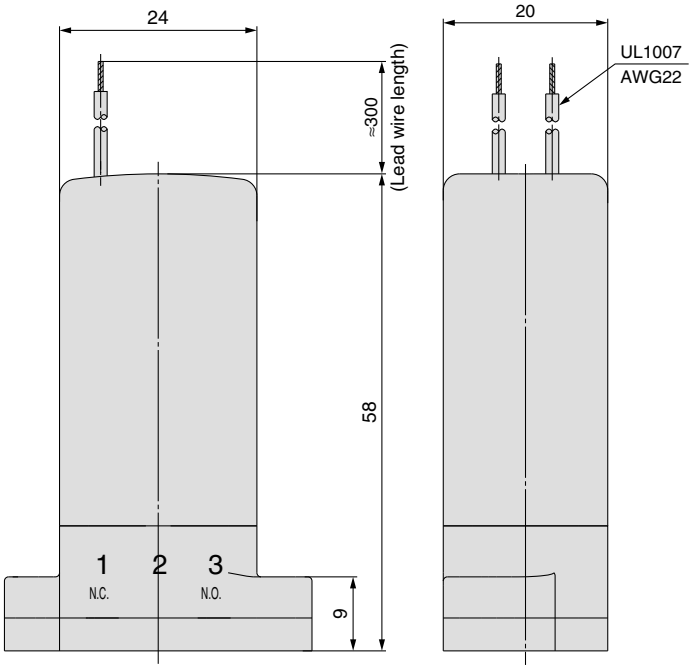

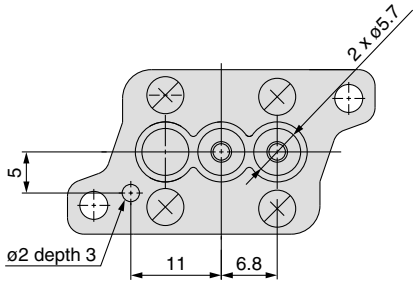

LVM20R4

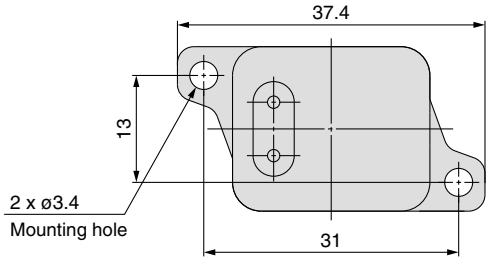

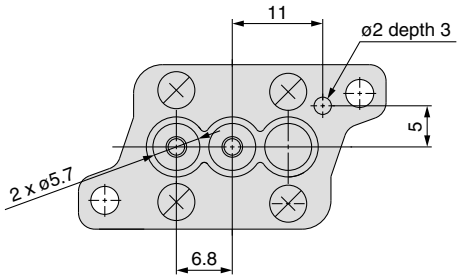

LVM20R3

Recommended interface dimensions

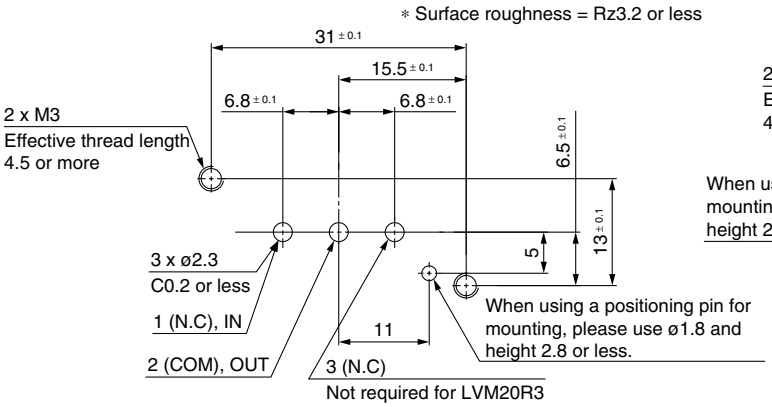

LVM20R3, LVM205R

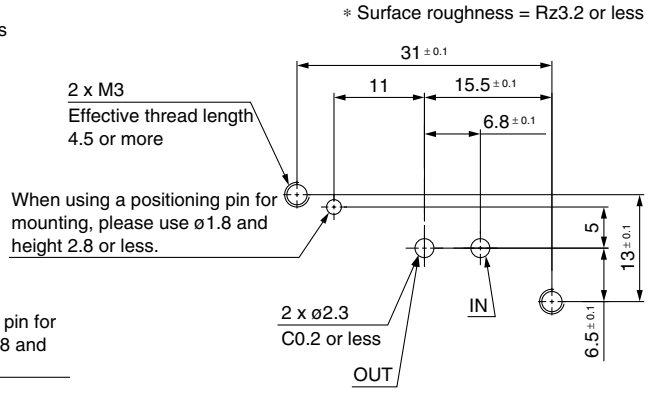

LVM20R4

Series ***LVM***

Safety Instructions

The following safety instructions are intended to prevent a hazardous situation and/or equipment damage. These instructions indicate the level of potential hazard by all safety practices, including labels of **"Caution", "Warning"** or **"Danger"**. To ensure safety, please observe ISO 4414 Note 1), JIS B 8370 Note 2).

⚠ **Caution:** Operator error could result in injury or equipment damage.

⚠ **Warning:** Operator error could result in serious injury or loss of life.

⚠ **Danger :** In extreme conditions, there is a possible result of serious injury or loss of life.

Note 1) ISO 4414: Pneumatic fluid power – General rules relating to systems
Note 2) JIS B 8370: General Rules for Pneumatic Equipment

⚠ Warning

1. The compatibility of the equipment is the responsibility of the person who designs the system or decides its specifications.

Since the products specified here are used in various operating conditions, their compatibility with a specific system must be based on specifications, post analysis and/or tests to meet a specific requirement. The expected performance and safety assurance will be the responsibility of the person who has determined the compatibility of the system. This person should continuously review the suitability of all items specified, referring to the latest catalogue information and taking into consideration the possibility of equipment failure when configuring a system. Be particularly careful in determining the compatibility with the fluid to be used.

2. Only trained personnel should operate machinery and equipment.

Fluids can be dangerous if handled incorrectly. Assembly, handling or maintenance of the system should be performed by trained and experienced operators.

3. Do not service machinery/equipment or attempt to remove components until the safety is confirmed.

1. Inspection and maintenance of machinery/equipment should only be performed once measures to prevent falling or runaway of the driven object have been confirmed. Measures to prevent danger from a fluid should also be confirmed.
2. When equipment is to be removed, confirm the safety processes mentioned above, release the fluid pressure and be certain there is no danger from fluid leakage or fluid remaining in the system.
3. Carefully restart the machinery, confirming that safety measures are being implemented.

4. If the equipment will be used in the following conditions or environments, please contact SMC first and be sure to take all necessary safety precautions.

1. Conditions and environments beyond the given specifications, or if the product is used outdoors.
2. With fluids whose application causes concern due to the type of fluid or additives, etc.
3. An application which has the possibility of having a negative effect on people and/or property, and therefore requires special safety analysis.

Series LVM
Specific Product Precautions 1

Be sure to read this before handling. Contact SMC when it is used in conditions other than the specifications.

Design and Selection

⚠ Warning

1. Do not use this product in applications which may adversely affect human life (e.g. medical equipment connected to the human body for drip infusion).

2. Confirm the specifications.

Give careful consideration to the operating conditions such as the application, fluid and environment, and use within the operating ranges specified in this catalogue.

3. Fluid

Be sure to confirm the compatibility between the component material and the fluid.

4. Maintenance space

The installation should allow sufficient space for maintenance activities.

5. Fluid pressure range

Fluid pressure should be within the allowable pressure range.

6. Ambient environment

Use within the allowable ambient temperature range. Be sure that the fluid used does not touch the external surface of the product.

7. Countermeasures against static electricity

Take measures to prevent static electricity since some fluids can cause static electricity.

8. Pressure (including vacuum) holding

It is not usable for an application such as holding the pressure (including vacuum) inside of a pressure vessel because air leakage is entailed in a valve.

9. Cannot be used as an emergency shutoff valve

The valves presented in this catalogue are not designed for safety applications such as an emergency shutoff valve. If the valves are used in this type of system, other reliable safety assurance measures should also be adopted.

10. Extended periods of continuous energisation

If solenoid valves are to be continuously energised for extended periods of time, use valves with power-saving circuits to minimise the amount of heat released by the coil.

Power-saving circuit waveform (example)

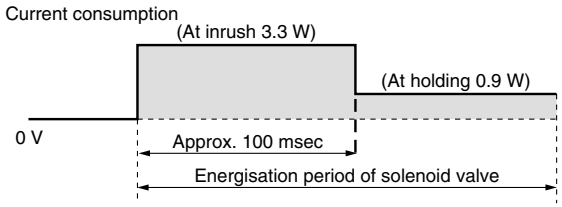

∗ Power consumption for the waveform shown above is that of LVM09/090.
∗ For LVM15/150, the type with power-saving circuit is standard.
∗ For LVM10/100, the inrush is 50 msec.

When a solenoid valve without a power-saving circuit is continuously energised for long periods of time, a temperature increase from the coil heat release can result in worsened performance and shortened service life of the solenoid valve, as well as adverse effects on peripheral equipment in the vicinity. For this reason, when valves are to be continuously energised for extended periods, use a fan or take other measures to disperse heat and keep the valve surface temperatures at 70°C or less.

The table below shows reference values for continuously energised valves (single unit) when surface temperature is 70°C or less.

Series	LVM09/090	LVM10/100	LVM20/200
Period of continuous energisation	5 min. or less	30 min. or less	30 min. or less
Duty ratio	50% or less		
Ambient temperature	25°C or less		
Power-saving circuit	None		

∗ Duty ratio: ON time/(ON time + OFF time)
∗ For LVM15/150, the type with power-saving circuit is standard.

Please use a fan or take other measures to disperse heat and keep temperatures within the specified range when mounting the solenoid valves inside control panels, etc. Be especially careful when using three or more adjacent valves with manifolds and keeping them continuously energised for extended periods, as this may result in dramatic increases in temperature.

11. Please use valve pitches equal to or above those shown in the table below when using multiple valves together.

Series	LVM09/090	LVM10/100	LVM15/150	LVM20/200
Valve pitch	10.5	14	17	21

Mounting

⚠ Warning

1. If air leakage increases or the equipment does not operate properly, stop operation.

After mounting is completed, confirm that it has been done correctly by performing a suitable function test.

2. Since the body (orifice shape) is designed to eliminate residual liquid, mounting in a vertical direction with the coil on top is recommended.

When residual liquid is not considered, any mounting position is possible.

Series LVM
Specific Product Precautions 2

Be sure to read this before handling. Contact SMC when it is used in conditions other than the specifications.

Piping

⚠ Caution

1. Preparation before piping

Before piping is connected, it should be thoroughly blown out with air (flushing) or washed to remove chips, cutting oil and other debris from inside the pipe.

2. When tubing is directly connected to the solenoid valve, insert the tubing straight into the nipple for a complete fit.

The reference inner diameter of the tubing is ø2.5 or less. Exercise care in selecting the tubing so that the outer diameter of the tubing after being connected does not exceed ø4.5.
The holding force varies by the tubing material. Be sure to confirm the holding force of each material before operation.
After connecting the tubing, care should be taken not to put excessive force (tensile force, compression, bending, etc.) on the tubing. Applying an external force greater than 20 N to the nipple may cause leakage.
Models: LVM10R1, 10R2, 102R

3. Always tighten threads with the proper tightening torque.

Screw the fitting into the solenoid valve and tighten by referring to the tightening torque below.
Models: LVM11, 10R3, 10R4, 10R6, 105R

Tightening Torque for Piping

Model		Thread size	Proper tightening torque N·m
Base mounted **LVM09R3, 09R4, 095R**		M2	0.1 to 0.14
Body ported **LVM11**		M5	1.5 to 2
Base mounted **LVM10R3,10R4, 10R6,105R**	Without sub-plate	M2 Note)	0.15 to 0.2
	With sub-plate	M6 or 1/4-28UNF	1.5 to 2
Base mounted **LVM15R3, 15R4, 155R**		M2.5	0.25 to 0.35
Base mounted **LVM20R3, 20R4, 205R**		M3	0.4 to 0.6

Note) At base mounted
∗ Reference
M5, M6, 1/4-28UNF thread type fitting: After tightening by hand, tighten approximately 1/6 turn with a tightening tool.

Wiring

⚠ Caution

1. Use electrical circuits which do not generate chattering in their contacts.

2. Use voltage which is within ±10% of the rated voltage.

However, when the response time is important, control the voltage to avoid variation on the minus side.

3. Apply the correct voltage.

Applying incorrect voltage may cause a malfunction or a burned coil.

4. Connect the wires so that an external force greater than 10 N is not applied to the lead wire.

Otherwise the coil will burn.

5. Units with power-saving circuits use polarised electrical connections.

Red (+), Black (–)

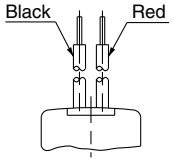

Lead wire color

Fluid Properties

⚠ Warning

Liquid (chemicals)

Components crystallise or clot depending on their nature. Leakage will occur when a crystallised or clotted component is caught between the sealing parts.
Take measures to clean such component if necessary.

Water

Install a filter strainer of about 100 mesh on the inlet side of the piping.

Air

Compressed air filtered with a filter with filtration rating of 5 μm or less, which is mounted on the inlet side of the piping, should be used.

Operating Environment

⚠ Warning

1. Do not use in explosive atmospheres.

2. Do not use in locations subject to excessive vibration or impact.

Impact resistance of this solenoid valve is 150 m/s². Vibration resistance of this solenoid valve is 30 m/s².

3. Do not use in locations where radiated heat will be received from nearby heat sources.

Maintenance

⚠ Warning

1. Removing the product

Shut off the fluid supply and release the fluid pressure in the system. Shut off the power supply. Remove the product.

2. Before operating, remove residual chemicals and completely replace it with deionised water, air, etc.

3. Do not disassemble the product.

Products which have been disassembled cannot be guaranteed. If disassembly is necessary, contact SMC.

Record of changes

B edition ∗ Addition of the LVM09/090, LVM15/150, LVM20/200 series.
∗ Change of model numbers for the LVM10/100 series.
∗ Number of pages from 12 to 28. LU

EUROPEAN SUBSIDIARIES:

Austria
SMC Pneumatik GmbH (Austria).
Girakstrasse 8, A-2100 Korneuburg
Phone: +43 2262-62280, Fax: +43 2262-62285
E-mail: office@smc.at
http://www.smc.at

Belgium
SMC Pneumatics N.V./S.A.
Nijverheidsstraat 20, B-2160 Wommelgem
Phone: +32 (0)3-355-1464, Fax: +32 (0)3-355-1466
E-mail: post@smcpneumatics.be
http://www.smcpneumatics.be

Bulgaria
SMC Industrial Automation Bulgaria EOOD
16 kliment Ohridski Blvd., fl.13 BG-1756 Sofia
Phone:+359 2 9744492, Fax:+359 2 9744519
E-mail: office@smc.bg
http://www.smc.bg

Croatia
SMC Industrijska automatika d.o.o.
Crnomerec 12, 10000 ZAGREB
Phone: +385 1 377 66 74, Fax: +385 1 377 66 74
E-mail: office@smc.hr
http://www.smc.hr

Czech Republic
SMC Industrial Automation CZ s.r.o.
Hudcova 78a, CZ-61200 Brno
Phone: +420 5 414 24611, Fax: +420 5 412 18034
E-mail: office@smc.cz
http://www.smc.cz

Denmark
SMC Pneumatik A/S
Knudsminde 4B, DK-8300 Odder
Phone: +45 70252900, Fax: +45 70252901
E-mail: smc@smc-pneumatik.dk
http://www.smcdk.com

Estonia
SMC Pneumatics Estonia OÜ
Laki 12, 106 21 Tallinn
Phone: +372 6510370, Fax: +372 65110371
E-mail: smc@smcpneumatics.ee
http://www.smcpneumatics.ee

Finland
SMC Pneumatics Finland Oy
PL72, Tiistinniityntie 4, SF-02231 ESPOO
Phone: +358 207 513513, Fax: +358 207 513595
E-mail: smcfi@smc.fi
http://www.smc.fi

France
SMC Pneumatique, S.A.
1, Boulevard de Strasbourg, Parc Gustave Eiffel
Bussy Saint Georges F-77607 Marne La Vallee Cedex 3
Phone: +33 (0)1-6476 1000, Fax: +33 (0)1-6476 1010
E-mail: contact@smc-france.fr
http://www.smc-france.fr

Germany
SMC Pneumatik GmbH
Boschring 13-15, D-63329 Egelsbach
Phone: +49 (0)6103-4020, Fax: +49 (0)6103-402139
E-mail: info@smc-pneumatik.de
http://www.smc-pneumatik.de

Greece
SMC Hellas EPE
Anagenniseos 7-9 - P.C. 14342. N. Philadelphia, Athens
Phone: +30-210-2717265, Fax: +30-210-2717766
E-mail: sales@smchellas.gr
http://www.smchellas.gr

Hungary
SMC Hungary Ipari Automatizálási Kft.
Budafoki ut 107-113, H-1117 Budapest
Phone: +36 1 371 1343, Fax: +36 1 371 1344
E-mail: office@smc.hu
http://www.smc.hu

Ireland
SMC Pneumatics (Ireland) Ltd.
2002 Citywest Business Campus, Naas Road, Saggart, Co. Dublin
Phone: +353 (0)1-403 9000, Fax: +353 (0)1-464-0500
E-mail: sales@smcpneumatics.ie
http://www.smcpneumatics.ie

Italy
SMC Italia S.p.A
Via Garibaldi 62, I-20061Carugate, (Milano)
Phone: +39 (0)2-92711, Fax: +39 (0)2-9271365
E-mail: mailbox@smcitalia.it
http://www.smcitalia.it

Latvia
SMC Pneumatics Latvia SIA
Smerla 1-705, Riga LV-1006
Phone: +371 781-77-00, Fax: +371 781-77-01
E-mail: info@smclv.lv
http://www.smclv.lv

Lithuania
SMC Pneumatics Lietuva, UAB
Oslo g.1, LT-04123 Vilnius
Phone: +370 5 264 81 26, Fax: +370 5 264 81 26

Netherlands
SMC Pneumatics BV
De Ruyterkade 120, NL-1011 AB Amsterdam
Phone: +31 (0)20-5318888, Fax: +31 (0)20-5318880
E-mail: info@smcpneumatics.nl
http://www.smcpneumatics.nl

Norway
SMC Pneumatics Norway A/S
Vollsveien 13 C, Granfos Næringspark N-1366 Lysaker
Tel: +47 67 12 90 20, Fax: +47 67 12 90 21
E-mail: post@smc-norge.no
http://www.smc-norge.no

Poland
SMC Industrial Automation Polska Sp.z.o.o.
ul. Poloneza 89, PL-02-826 Warszawa,
Phone: +48 22 211 9600, Fax: +48 22 211 9617
E-mail: office@smc.pl
http://www.smc.pl

Portugal
SMC Sucursal Portugal, S.A.
Rua de Engº Ferreira Dias 452, 4100-246 Porto
Phone: +351 22-610-89-22, Fax: +351 22-610-89-36
E-mail: postpt@smc.smces.es
http://www.smces.es

Romania
SMC Romania srl
Str Frunzei 29, Sector 2, Bucharest
Phone: +40 213205111, Fax: +40 213261489
E-mail: smcromania@smcromania.ro
http://www.smcromania.ro

Russia
SMC Pneumatik LLC.
4B Sverdlovskaja nab, St. Petersburg 195009
Phone.:+7 812 718 5445, Fax:+7 812 718 5449
E-mail: info@smc-pneumatik.ru
http://www.smc-pneumatik.ru

Slovakia
SMC Priemyselná Automatizáciá, s.r.o.
Námestie Matina Benku 10, SK-81107 Bratislava
Phone: +421 2 444 56725, Fax: +421 2 444 56028
E-mail: office@smc.sk
http://www.smc.sk

Slovenia
SMC industrijska Avtomatika d.o.o.
Mirnska cesta 7, SLO-8210 Trebnje
Phone: +386 7 3885412 Fax: +386 7 3885435
E-mail: office@smc.si
http://www.smc.si

Spain
SMC España, S.A.
Zuazobidea 14, 01015 Vitoria
Phone: +34 945-184 100, Fax: +34 945-184 124
E-mail: post@smc.smces.es
http://www.smces.es

Sweden
SMC Pneumatics Sweden AB
Ekhagsvägen 29-31, S-141 71 Huddinge
Phone: +46 (0)8-603 12 00, Fax: +46 (0)8-603 12 90
E-mail: post@smcpneumatics.se
http://www.smc.nu

Switzerland
SMC Pneumatik AG
Dorfstrasse 7, CH-8484 Weisslingen
Phone: +41 (0)52-396-3131, Fax: +41 (0)52-396-3191
E-mail: info@smc.ch
http://www.smc.ch

Turkey
Entek Pnömatik San. ve Tic. A*.
Perpa Ticaret Merkezi B Blok Kat:11 No: 1625, TR-34386, Okmeydani, Istanbul
Phone: +90 (0)212-444-0762, Fax: +90 (0)212-221-1519
E-mail: smc@entek.com.tr
http://www.entek.com.tr

UK
SMC Pneumatics (UK) Ltd
Vincent Avenue, Crownhill, Milton Keynes, MK8 0AN
Phone: +44 (0)800 1382930 Fax: +44 (0)1908-555064
E-mail: sales@smcpneumatics.co.uk
http://www.smcpneumatics.co.uk

OTHER SUBSIDIARIES WORLDWIDE:

ARGENTINA, AUSTRALIA, BOLIVIA, BRASIL, CANADA, CHILE, CHINA, HONG KONG, INDIA, INDONESIA, MALAYSIA, MEXICO, NEW ZEALAND, PHILIPPINES, SINGAPORE, SOUTH KOREA, TAIWAN, THAILAND, USA, VENEZUELA

http://www.smc.eu
http://www.smcworld.com

SMC CORPORATION Akihabara UDX 15F, 4-14-1, Sotokanda, Chiyoda-ku, Tokyo 101-0021, JAPAN Phone: 03-5207-8249 FAX: 03-5298-5362

1st printing MP printing MP 00 Printed in Spain