PRODUCT MANUAL

MiniCore RCM5600W/RCM6600W

C-Programmable Wi-Fi Core Modules

OEM User's Manual

019–0174_J

Downloaded from Arrow.com.

MiniCore RCM5600W/RCM6600W User's Manual

Part Number 019-0174 • Printed in U.S.A.

©2016 Digi International Inc. • All rights reserved.

Digi International reserves the right to make changes and improvements to its products without providing notice.

Trademarks

Rabbit®, MiniCore®, and Dynamic C® are registered trademarks of Digi International Inc.

Wi-Fi® is a registered trademark of the Wi-Fi Alliance.

Rabbit 5000® and MiniCore® are trademarks of Digi International Inc.

The latest revision of this manual is available on the Digi Web site www.digi.com.

Downloaded from Arrow.com.

Downloaded from Arrow.com.

Downloaded from Arrow.com.

TABLE OF CONTENTS

Chapter 1: Introduction 1

1.1 MiniCore Module Variants 1

1.2 RCM5600W/RCM6600W Features 3

1.3 Advantages of the RCM5600W/RCM6600W 4

1.4 Development and Evaluation Tools 4
- 1.4.1 RCM5600W or RCM6600W Standard Development Kit 4
- 1.4.2 RCM5600W or RCM6600W Deluxe Development Kit 5
- 1.4.3 Optional Add-Ons 5
- 1.4.4 Software 6
- 1.4.5 Online Documentation 6

1.5 Certifications 7
- 1.5.1 FCC Part 15 Class B 7
- 1.5.2 Industry Canada Labeling 9
- 1.5.3 Europe 12
- 1.5.4 Japan 12

Chapter 2: Getting Started 13

2.1 Install Dynamic C 13

2.2 Hardware Connections 14
- 2.2.1 Step 1 — Prepare the Interface Board for Development 14
- 2.2.2 Step 2 — Install Module on Interface Board 15
- 2.2.3 Step 3 — Connect Antenna 16
- 2.2.4 Step 4 — Connect USB Cable 16

2.3 Run a Sample Program 18
- 2.3.1 Troubleshooting 19

2.4 Where Do I Go From Here? 20
- 2.4.1 Technical Support 20

Chapter 3: Running Sample Programs 21

3.1 Introduction 21

3.2 Sample Programs 22

Chapter 4: Hardware Reference 25

4.1 RCM5600W/RCM6600W Digital Inputs and Outputs 27
- 4.1.1 Memory I/O Interface 34
- 4.1.2 Other Inputs and Outputs 34
- 4.1.3 Analog Inputs 35

4.2 Serial Communication 36
- 4.2.1 Serial Ports 36
- 4.2.2 Programming Port 37

4.3 Wi-Fi 38

Downloaded from Arrow.com.

4.3.1 Antenna Grounding Requirements 40
4.4 Ethernet (RCM6600W and RCM6650W only) 41
4.5 Programming Modes 41
4.5.1 Standalone Operation of the RCM5600W/RCM6600W 42
4.6 Other Hardware 43
4.6.1 Clock Doubler or PLL 43
4.6.2 Spectrum Spreader 43
4.7 Memory 44
4.7.1 SRAM 44
4.7.2 Flash Memory 44
4.7.3 Encryption RAM Memory 44

Chapter 5: Software Reference 45

5.1 More About Dynamic C 45
5.2 Dynamic C Function Calls 47
5.2.1 Digital I/O 47
5.2.2 Serial Communication Drivers 47
5.2.3 Serial Flash Memory Use 48
5.2.4 User and ID Blocks 50
5.2.5 Wi-Fi Drivers 50
5.2.6 Interface Board Function Calls 51
5.3 Upgrading Dynamic C 52
5.3.1 Add-On Modules 52

Chapter 6: Using the Wi-Fi Features 53

6.1 Introduction to Wi-Fi 53
6.1.1 Infrastructure Mode 53
6.1.2 Ad-Hoc Mode 54
6.1.3 Additional Information 54
6.2 Running Wi-Fi Sample Programs 55
6.2.1 Wi-Fi Setup 56
6.2.2 What Else You Will Need 57
6.2.3 Configuration Information 58
6.2.4 Wi-Fi Sample Programs 61
6.2.5 RCM5600W/RCM6600W Sample Programs 64
6.3 Dynamic C Wi-Fi Configurations 71
6.3.1 Configuring TCP/IP at Compile Time 71
6.3.2 Configuring TCP/IP at Run Time 75
6.3.3 Other Key Function Calls 75
6.4 Where Do I Go From Here? 76

Appendix A: RCM5600W and RCM6600W Specifications 77

A.1 Electrical and Mechanical Characteristics 78
A.1.1 mini PCI Express Connector Design Recommendations 84
A.2 Rabbit 5000 Microprocessor Characteristics 86
A.3 Rabbit 6000 Microprocessor Characteristics 86

Appendix B: Interface Board 87

B.1 Introduction 88
B.1.1 Interface Board Features 89
B.2 Mechanical Dimensions and Layout 90
B.2.1 Headers 91

Downloaded from Arrow.com.

B.3 Power Supply 92
B.4 Using the Interface Board 93
B.4.1 Add Additional Boards 94
B.5 Interface Board Jumper Configurations 95

Appendix C: Prototyping Board 97

C.1 Introduction 98
C.1.1 Prototyping Board Features 98
C.2 Mechanical Dimensions and Layout 99
C.2.1 Headers 101
C.3 Using the Prototyping Board 102
C.3.1 Add Additional Boards 103

Appendix D: Digital I/O Accessory Board 105

D.1 Introduction 106
D.1.1 Digital I/O Accessory Board Features 106
D.2 Mechanical Dimensions and Layout 107
D.2.1 Headers 108
D.3 Using the Digital I/O Accessory Board 109
D.3.1 Configuration 110
D.3.2 Add Additional Boards 112

Appendix E: Serial Communication Accessory Board 113

E.1 Introduction 114
E.1.1 Serial Communication Accessory Board Features 114
E.2 Mechanical Dimensions and Layout 115
E.2.1 Headers 116
E.3 Using the Serial Communication Accessory Board 117
E.3.1 Configuration 118
E.3.2 Add Additional Boards 120

Appendix F: Power Supply 121

F.1 Power Supplies 121
F.1.1 Battery Backup 122
F.1.2 Battery-Backup Circuit 123
F.1.3 Reset Generator 123
F.1.4 Onboard Power Supplies 124

Index 125

Downloaded from Arrow.com.

Downloaded from Arrow.com.

1. INTRODUCTION

The RCM5600W and RCM6600W MiniCore modules provide a compact module in a mini PCI Express form factor with integrated Wi-Fi/802.11b/g functionality to allow you to create a low-cost, low-power, Wi-Fi based control and communications solution for your embedded system.

The RCM6600W allows use of Ethernet as well as Wi-Fi, which opens up many possibilities for embedded systems which require wireless as well as traditional, wired, connectivity.

A Development Kit is available with the essentials that you need to design your own microprocessor-based system, and includes a complete Dynamic C software development system. The Development Kit also contains an Interface Board with a USB connection that will allow you to evaluate the RCM5600W/RCM6600W, and a Prototyping Board to help you to develop your own applications. You will also be able to write and test software for the RCM5600W/RCM6600W modules, including Wi-Fi applications.

The RCM5600W has a Rabbit 5000 microprocessor operating at up to 73.73 MHz, flash memory, two clocks (main oscillator and real-time clock), and the circuitry necessary to reset and manage the Rabbit 5000. An edge connector brings out the RCM5600W user interface to a 52-pin mini PCI Express socket on the motherboard the module is mounted on.

The RCM6600W is similar to the RCM5600W, except that it has a Rabbit 6000 microprocessor operating at up to 162.5 MHz. The Rabbit 6000 has 1MB of internal fast RAM, and it is also possible to use Wi-Fi and Ethernet simultaneously. The RCM6600W also permits four of the edge connector pins (PE0-3) to be selectively configured as analog inputs.

The RCM5600W/RCM6600W module receives its +3.3 V power from the motherboard on which it is mounted. The module can interface with other CMOS-compatible digital devices through the motherboard.

1.1 MiniCore Module Variants

This document describes four MiniCore module variants. The RCM5600W is based on the Rabbit 5000 microprocessor, whereas the RCM6600W is based on the Rabbit 6000 and it includes Ethernet as well as Wi-Fi. There are also two minor variants, the RCM5650W and the RCM6650W. These variants add a larger serial flash memory (4MB instead of 1MB) but are otherwise almost identical to their -00W siblings.

Downloaded from Arrow.com.

Unless otherwise noted, references to the RCM5600W also apply to the RCM5650W, and references to the RCM6600W also apply to the RCM6650W. The term “MiniCore” refers to any of these variants, as appropriate to the context, as does the term “RCM5600W/RCM6600W”.

Downloaded from Arrow.com.

1.2 RCM5600W/RCM6600W Features

- Small size: 1.20" × 2.00" × 0.40"
  (30 mm × 51 mm × 10 mm)
- Microprocessor: Rabbit 5000 running at 73.73 MHz, or Rabbit 6000 running at 162.5 MHz (as well as lower multiples of 25MHz).
- Up to 35 general-purpose I/O lines each configurable with up to four alternate functions
- On the RCM6600W: four I/O lines may be selected as analog inputs, in pairs.
- 3.3 V I/O lines
- Six CMOS-compatible serial ports — four ports are configurable as a clocked serial port (SPI), and two ports are configurable as SDLC/HDLC serial ports.
- Airoha single-chip 802.11b/g transceiver
- External I/O bus can be configured for 8 data lines, 8 address lines (shared with parallel I/O lines), and I/O read/write
- 1MB SRAM and 1MB serial flash memory (4MB serial flash memory on the RCM5650W/RCM6650W)
- Battery-backable real-time clock
- Watchdog supervisor

Currently there are four production models. Table 1 summarizes their main features.

Table 1. RCM5600W, RCM5650W, RCM6600W and RCM6650W Features

Feature	RCM5600W	RCM5650W	RCM6600W	RCM6650W
Microprocessor	Rabbit® 5000 at 73.73 MHz		Rabbit® 6000 at 162.5 MHz	
SRAM	1MB (external for Rabbit 5000, internal for Rabbit 6000)			
Serial Flash Memory (program)	1MB	4MB	1MB	4MB
Serial Ports	6 shared high-speed, CMOS-compatible ports: 6 are configurable as asynchronous serial ports; 4 are configurable as clocked serial ports (SPI); 2 are configurable as SDLC/HDLC serial ports; 1 asynchronous serial port is used during programming			
Wi-Fi	802.11b/g standard, ISM 2.4 GHz			
Ethernet	Not available		Available on edge connector	

The RCM5600W/RCM6600W is programmed through a USB connector on the mother-board using a USB cable supplied with the Development Kit. The RCM5600W/RCM6600W may also be programmed remotely using the Remote Program Update library with Dynamic C v. 10.54 or later (v. 10.72 for the RCM6600W). See Application Note AN421, ***Remote Program Update***, for more information.

Downloaded from Arrow.com.

NOTE: The RabbitLink cannot be used to program the RCM5600W/RCM6600W.

Appendix A provides detailed specifications for the RCM5600W/RCM6600W.

1.3 Advantages of the RCM5600W/RCM6600W

- Fast time to market using a fully engineered, "ready-to-run/ready-to-program" microprocessor core.
- Competitive pricing when compared with the alternative of purchasing and assembling individual components.
- Easy C-language program development and debugging
- Rabbit Field Utility to download compiled Dynamic C .bin files.
- Generous memory size allows large programs with tens of thousands of lines of code, and substantial data storage.

1.4 Development and Evaluation Tools

1.4.1 RCM5600W or RCM6600W Standard Development Kit

The RCM5600W or RCM6600W Standard Development Kits contains the hardware essentials you will need to use your RCM5600W or RCM6600W module. These items are supplied in the standard versions of the Development Kit.

- RCM5600W or RCM6600W module.
- 2.4 GHz dipole antenna with mounting bracket and U.FL to RP-SMA connector cable.
- Interface Board with standoffs/connectors.
- Prototyping Board with standoffs/connectors.
- USB cable to program the module via Interface Board.
- ***Dynamic C*** CD-ROM, including product documentation on disk.
- ***Getting Started*** instructions.
- Registration card.

Downloaded from Arrow.com.

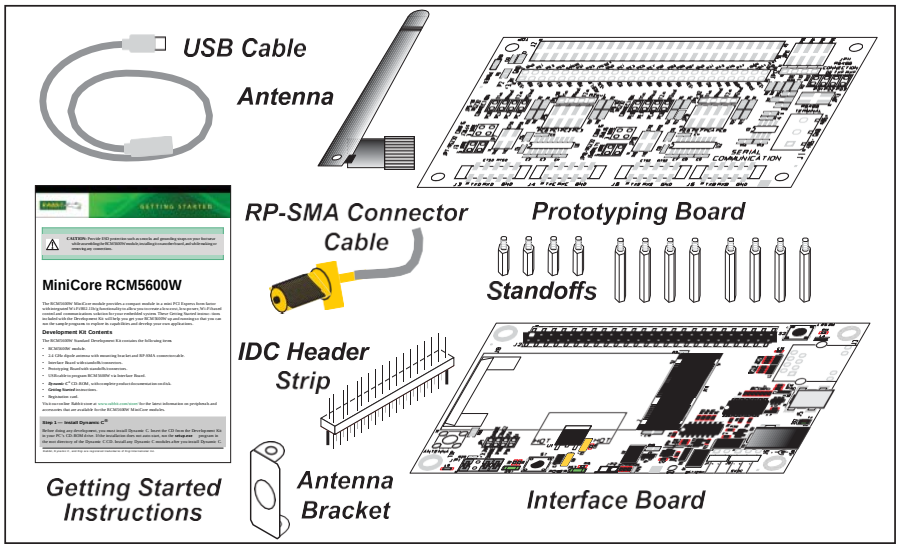

Figure 1. RCM5600W/RCM6600W Standard Development Kit

1.4.2 RCM5600W or RCM6600W Deluxe Development Kit

In addition to the items included in the standard Development Kit, the Deluxe Development Kit contains the following items.

- Universal AC adapter, 5 V DC, 2 A (includes Canada/Japan/U.S., Australia/N.Z., U.K., and European style plugs). Development Kits sold in North America may contain an AC adapter with only a North American style plug.
- Digital I/O and Serial Communication accessory boards for use with certain sample programs.
- DB9 to 10-pin header serial cable.
- ***Rabbit 5000 or Rabbit 6000 Processor Easy Reference*** poster.

1.4.3 Optional Add-Ons

Rabbit has a power supply and an Antenna Add-On Kit available for the RCM5600W/RCM6600W.

- Separate power supply (Part No. 101-1273)

  The universal AC adapter is available for customers who purchased the Standard Development Kit. This universal AC adapter may be used if your RCM5600W/RCM6600W does not work when you power it through the USB cable, and you do not have your own +5 V DC power supply.

- Antenna Add-On Kit (Part No. 101-1295)

  ▶ 2.4 GHz dipole antenna

  ▶ U.FL to RP-SMA connector cable

Downloaded from Arrow.com.

RCM5600W or RCM6600W modules purchased individually or in production quantities do not come with an antenna or a connector cable. The Antenna Add-On Kit provides a convenient source of these items.

Visit our Web site at www.digi.com or contact your Rabbit sales representative or authorized distributor for further information.

1.4.4 Software

The RCM5600W is programmed using version 10.50 or later of Dynamic C; the RCM5650W requires version 10.60 or later of Dynamic C; and the RCM6600W or RCM6650W require version 10.72 or later. A compatible version is included on the Development Kit CD-ROM. This version of Dynamic C includes the popular µC/OS-II real-time operating system, point-to-point protocol (PPP), FAT file system, RabbitWeb, and the Rabbit Embedded Security Pack featuring the Secure Sockets Layer (SSL) and a specific Advanced Encryption Standard (AES) library.

In addition to the Web-based technical support included at no extra charge, a one-year telephone-based technical support subscription is also available for purchase. Visit our Web site at www.digi.com for further information and complete documentation, or contact your Rabbit sales representative or authorized distributor

1.4.5 Online Documentation

The online documentation is installed along with Dynamic C, and an icon for the documentation menu can be placed on the workstation's desktop. Double-click this icon to reach the menu. If the icon is missing, use your browser to find and load **default.htm** in the **docs** folder, found in the Dynamic C installation folder.

The latest versions of all documents are always available for free, unregistered download from our Web sites as well.

Downloaded from Arrow.com.

1.5 Certifications

Only RCM5600W/RCM6600W modules bearing the FCC certification are certified for use in Wi-Fi enabled end devices, and any applications must be compiled using Dynamic C v. 10.72 or later (RCM5650W/RCM6650W applications must be compiled using Dynamic C v. 10.72 or later). The certification is valid only for RCM5600W, RCM5650W, RCM6600W or RCM6650W modules equipped with the dipole antenna that is included with the modules, or a detachable antenna with a 60 cm coaxial cable (Digi International part number 29000105). Follow the antenna grounding recommendations provided in Section 4.3.1. Changes or modifications to this equipment not expressly approved by Digi International may void the user's authority to operate this equipment.

In the event that these conditions cannot be met, then the FCC certification is no longer considered valid and the FCC ID can not be used on the final product. In these circumstances, the systems integrator or end-user will be responsible for re-evaluating the end device (including the transmitter) and obtaining a separate FCC certification.

NOTE: Any regulatory certification is voided if the RF shield on the module is removed.

1.5.1 FCC Part 15 Class B

The RCM5600W, RCM5650W, RCM6600W and RCM6650W MiniCore modules have been tested and found to comply with the limits for Class B digital devices pursuant to Part 15 Subpart B, of the FCC Rules. These limits are designed to provide reasonable protection against harmful interference in a residential environment. This equipment generates, uses, and can radiate radio frequency energy, and if not installed and used in accordance with the instruction manual, may cause harmful interference to radio communications. However, there is no guarantee that interference will not occur in a particular installation. If this equipment does cause harmful interference to radio or television reception, which can be determined by turning the equipment off and on, the user is encouraged to try and correct the interference by one or more of the following measures:

- Reorient or relocate the receiving antenna.
- Increase the separation between the equipment and the receiver.
- Connect the equipment into an outlet on a circuit different from that to which the receiver is connected.
- Consult the dealer or an experienced radio/TV technician for help.

Downloaded from Arrow.com.

Labeling Requirements (FCC 15.19)

RCM5600/5650W

FCC ID: MCQ-MCWIFI

This device complies with Part 15 of FCC rules. Operation is subject to the following two conditions:

(1) this device may not cause harmful interference, and

(2) this device must accept any interference received, including interference that may cause undesired operation.

RCM6600/6650W

FCC ID: MCQ-R66

This device complies with Part 15 of FCC rules. Operation is subject to the following two conditions:

(1) this device may not cause harmful interference, and

(2) this device must accept any interference received, including interference that may cause undesired operation.

If the FCC identification number is not visible when the module is installed inside another device, then the outside of the device into which the module is installed must also display a label referring to the enclosed module or the device must be capable of displaying the FCC identification number electronically. This exterior label can use wording such as the following:

- Contains Transmitter Module FCC ID: MCQ-MCWIFI
- Contains FCC ID: MCQ-MCWIFI
- Contains FCC ID: MCQ-R66 for RCM6600/RCM6650W.

Any similar wording that expresses the same meaning may be used.

The following caption must be included with documentation for any device incorporating the MiniCore modules described herein.

Caution — Exposure to Radio-Frequency Radiation.

To comply with FCC RF exposure compliance requirements, for mobile configurations, a separation distance of at least 20 cm must be maintained between the antenna of this device and all persons.

This device must not be co-located or operating in conjunction with any other antenna or transmitter.

Downloaded from Arrow.com.

1.5.2 Industry Canada Labeling

Canada (IC) (RCM5600W)

This device complies with Industry Canada licence-exempt RSS standard(s). Operation is subject to the following two conditions:

- This device may not cause interference.
- This device must accept any interference, including interference that may cause undesired operation of the device.

Le présent appareil est conforme aux CNR d'Industrie Canada applicables aux appareils radio exempts de licence. L'exploitation est autorisée aux deux conditions suivantes : (1) l'appareil ne doit pas produire de brouillage, et (2) l'utilisateur de l'appareil doit accepter tout brouillage radioélectrique subi, même si le brouillage est susceptible d'en compromettre le fonctionnement.

Labeling Requirements

Labeling requirements for Industry Canada are similar to those of the FCC. A clearly visible label on the outside of the final product enclosure must display the following text:

Contains IC: 1846A-MCWIFI

The integrator is responsible for its product to comply with IC ICES-003 & FCC Part 15, Sub. B - Unintentional Radiators. ICES-003 is the same as FCC Part 15 Sub. B and Industry Canada accepts FCC test report or CISPR 22 test report for compliance with ICES-003.

Transmitters with Detachable Antennas

Part Number	Type (Description)	Gain	Application	Min. Separation
A24-HASM-450	Dipole (Articulated RPSMA)	2.1 dBi	Fixed / Mobile	20 cm

This radio transmitter (IC: 1846A-MCWIFI) has been approved by Industry Canada to operate with the antenna types listed in the table above with the maximum permissible gain and required antenna impedance for each antenna type indicated. Antenna types not included in this list, having a gain greater than the maximum gain indicated for that type, are strictly prohibited for use with this device.

Le présent émetteur radio (IC: 1846A-MCWIFI) a été approuvé par Industrie Canada pour fonctionner avec les types d'antenne énumérés ci-dessous et ayant un gain admissible maximal et l'impédance requise pour chaque type d'antenne. Les types d'antenne non inclus dans cette liste, ou dont le gain est supérieur au gain maximal indiqué, sont strictement interdits pour l'exploitation de l'émetteur.

Downloaded from Arrow.com.

Detachable Antenna

Under Industry Canada regulations, this radio transmitter may only operate using an antenna of a type and maximum (or lesser) gain approved for the transmitter by Industry Canada. To reduce potential radio interference to other users, the antenna type and its gain should be so chosen that the equivalent isotropically radiated power (e.i.r.p.) is not more than that necessary for successful communication.

Conformément à la réglementation d'Industrie Canada, le présent émetteur radio peut fonctionner avec une antenne d'un type et d'un gain maximal (ou inférieur) approuvé pour l'émetteur par Industrie Canada. Dans le but de réduire les risques de brouillage radioélectrique à l'intention des autres utilisateurs, il faut choisir le type d'antenne et son gain de sorte que la puissance isotrope rayonnée équivalente (p.i.r.e.) ne dépasse pas l'intensité nécessaire àl'établissement d'une communication satisfaisante.

Canada (IC) (RCM6600W)

This device complies with Industry Canada licence-exempt RSS standard(s). Operation is subject to the following two conditions:

- This device may not cause interference.
- This device must accept any interference, including interference that may cause undesired operation of the device.

Le présent appareil est conforme aux CNR d'Industrie Canada applicables aux appareils radio exempts de licence. L'exploitation est autorisée aux deux conditions suivantes : (1) l'appareil ne doit pas produire de brouillage, et (2) l'utilisateur de l'appareil doit accepter tout brouillage radioélectrique subi, même si le brouillage est susceptible d'en compromettre le fonctionnement

Labeling Requirements

Labeling requirements for Industry Canada are similar to those of the FCC. A clearly visible label on the outside of the final product enclosure must display the following text:

Contains IC: 1846A-R66

The integrator is responsible for its product to comply with IC ICES-003 & FCC Part 15, Sub. B - Unintentional Radiators. ICES-003 is the same as FCC Part 15 Sub. B and Industry Canada accepts FCC test report or CISPR 22 test report for compliance with ICES-003.

Transmitters with Detachable Antennas

Part Number	Type (Description)	Gain	Application	Min. Separation
A24-HASM-450	Dipole (Articulated RPSMA)	2.1 dBi	Fixed / Mobile	20 cm

Downloaded from Arrow.com.

This radio transmitter (IC: 1846A-R66) has been approved by Industry Canada to operate with the antenna types listed in the table above with the maximum permissible gain and required antenna impedance for each antenna type indicated. Antenna types not included in this list, having a gain greater than the maximum gain indicated for that type, are strictly prohibited for use with this device.

Le présent émetteur radio (IC: 1846A-R66) a été approuvé par Industrie Canada pour fonctionner avec les types d'antenne énumérés ci-dessous et ayant un gain admissible maximal et l'impédance requise pour chaque type d'antenne. Les types d'antenne non inclus dans cette liste, ou dont le gain est supérieur au gain maximal indiqué, sont strictement interdits pour l'exploitation de l'émetteur.

Detachable Antenna

Under Industry Canada regulations, this radio transmitter may only operate using an antenna of a type and maximum (or lesser) gain approved for the transmitter by Industry Canada. To reduce potential radio interference to other users, the antenna type and its gain should be so chosen that the equivalent isotropically radiated power (e.i.r.p.) is not more than that necessary for successful communication.

Conformément à la réglementation d'Industrie Canada, le présent émetteur radio peut fonctionner avec une antenne d'un type et d'un gain maximal (ou inférieur) approuvé pour l'émetteur par Industrie Canada. Dans le but de réduire les risques de brouillage radioélectrique à l'intention des autres utilisateurs, il faut choisir le type d'antenne et son gain de sorte que la puissance isotrope rayonnée équivalente (p.i.r.e.) ne dépasse pas l'intensité nécessaire àl'établissement d'une communication satisfaisante.

Downloaded from Arrow.com.

1.5.3 Europe

The marking shall include as a minimum:

- the name of the manufacturer or his trademark;
- the type designation;
- equipment classification, (see below).

Receiver Class	Risk Assessment of Receiver Performance
1	Highly reliable SRD communication media, e.g., serving human life inherent systems (may result in a physical risk to a person).
2	Medium reliable SRD communication media, e.g., causing inconvenience to persons that cannot be overcome by other means.
3	Standard reliable SRD communication media,e.g., inconvenience to persons that can simply be overcome by other means.

NOTE: Manufacturers are recommended to declare the classification of their devices in accordance with Table 2 and EN 300 440-2 [5] clause 4.2, as relevant. In particular, where an SRD that may have inherent safety of human life implications, manufacturers and users should pay particular attention to the potential for interference from other systems operating in the same or adjacent bands.

Regulatory Marking

The equipment shall be marked, where applicable, in accordance with CEPT/ERC Recommendation 70-03 or Directive 1999/5/EC, whichever is applicable. Where this is not applicable, the equipment shall be marked in accordance with the National Regulatory requirements.

The MiniCore module has been tested and found to comply with:

- EN 300 328 v1.7.1
- EN 301 489-1 v1.8.1
- EN 301 489-17 v1.3.2 standards.

1.5.4 Japan

RCM5600W and RCM5650W modules are certified for use in Japan under Article 2-1-19. The Acceptance Number is 003WWA090869.

Downloaded from Arrow.com.

2. GETTING STARTED

This chapter describes the RCM5600W/RCM6600W hardware in more detail, and explains how to set up and use the accompanying Interface Board.

> **NOTE:** This chapter (and this manual) assume that you have the RCM5600W or RCM6600W Development Kit. If you purchased a MiniCore module by itself, you will have to adapt the information in this chapter and elsewhere to your test and development setup.

2.1 Install Dynamic C

To develop and debug programs for the RCM5600W/RCM6600W modules (and for all other Rabbit hardware), you must install and use Dynamic C.

If you have not yet installed Dynamic C version 10.50 (or version 10.72 for an RCM6600W, or a later version), do so now by inserting the Dynamic C CD from the Development Kit in your PC's CD-ROM drive. If autorun is enabled, the CD installation will begin automatically.

If autorun is disabled or the installation does not start, use the Windows **Start | Run** menu or Windows Disk Explorer to launch **setup.exe** from the root folder of the CD-ROM.

The installation program will guide you through the installation process. Most steps of the process are self-explanatory.

Once your installation is complete, you will have up to three new icons on your PC desktop. One icon is for Dynamic C, another opens the documentation menu, and the third is for the Rabbit Field Utility, a tool used to download precompiled software to a target system.

If you have purchased any of the optional Dynamic C modules, install them after installing Dynamic C. The modules may be installed in any order. You must install the modules in the same folder where Dynamic C was installed.

Downloaded from Arrow.com.

2.2 Hardware Connections

There are four steps to connecting the Interface Board for use with Dynamic C and the sample programs:

1. Insert standoffs/connectors on the Interface Board.
2. Install the MiniCore module on the Interface Board.
3. Connect antenna.
4. Connect the USB cable between the Interface Board and the workstation PC.

CAUTION: Provide ESD protection such as smocks and grounding straps on your footwear.while assembling the module, installing it on another board, and while making or removing any connections.

Remember to use ESD protection regardless of whether you are working with the module on the Interface Board or in your own OEM application.

2.2.1 Step 1 — Prepare the Interface Board for Development

Insert a short plastic standoff supplied from the Development Kit in one of the corner holes from the bottom of the Interface Board, then secure it with a long plastic standoff from above as shown in Figure 2. Repeat this step so that plastic standoffs/connectors are in place at three positions and the antenna bracket is at the fourth position.

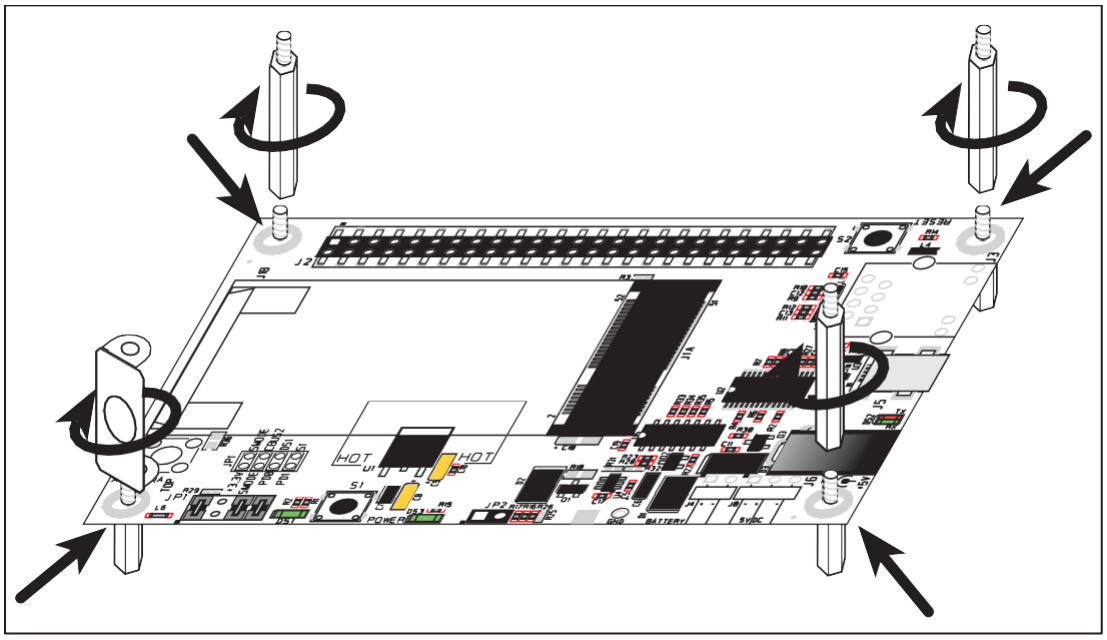

Figure 2. Insert Standoffs/Connectors

Downloaded from Arrow.com.

2.2.2 Step 2 — Install Module on Interface Board

Position the RCM5600W/RCM6600W module with the edge connectors facing the mini PCI Express socket J1A at an angle as shown in Figure 3 below. Insert the edge connectors into the mini PCI Express socket J1A, then press down on the opposite edge of the module to snap it into place in holder J1B.

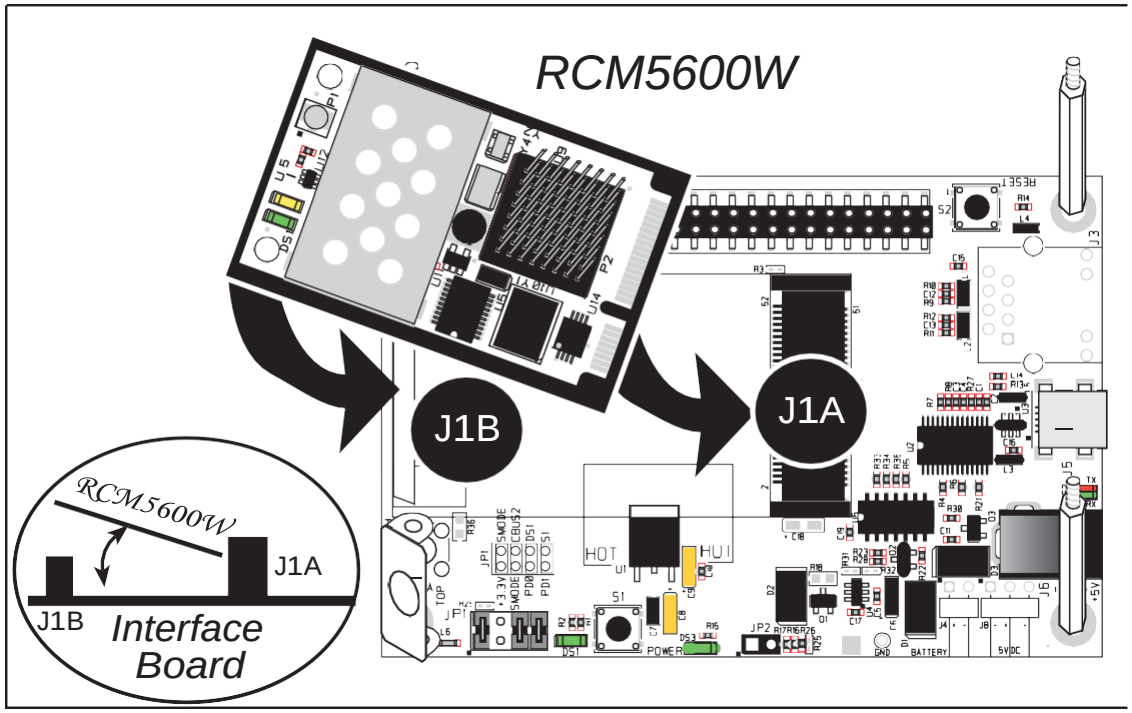

Figure 3. Install the RCM5600W/RCM6600W Module on the Interface Board

Should you need to remove the module, use two fingernails to hold back the spring clip at J1B from the two module corners, lift up the edge of the module above J1B, then pull the module away to remove the edge connectors from the mini PCI Express socket.

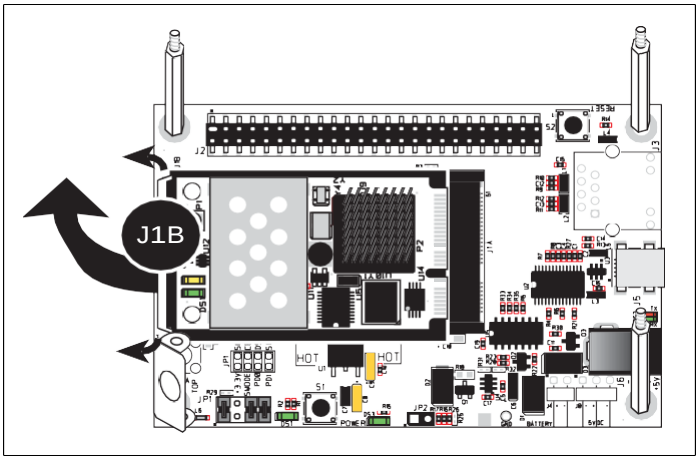

CAUTION: Remove power before attempting to insert or remove the RCM5600W/RCM6600W in the mini PCI Express socket.

Downloaded from Arrow.com.

2.2.3 Step 3 — Connect Antenna

Install the antenna U.FL to RP-SMA connector cable in the bracket using two lockwashers and the nut as shown in the insert in Figure 4. Connect the wire to connector P1 on the RCM5600W/RCM6600W, then attach the antenna to the antenna RP-SMA connector.

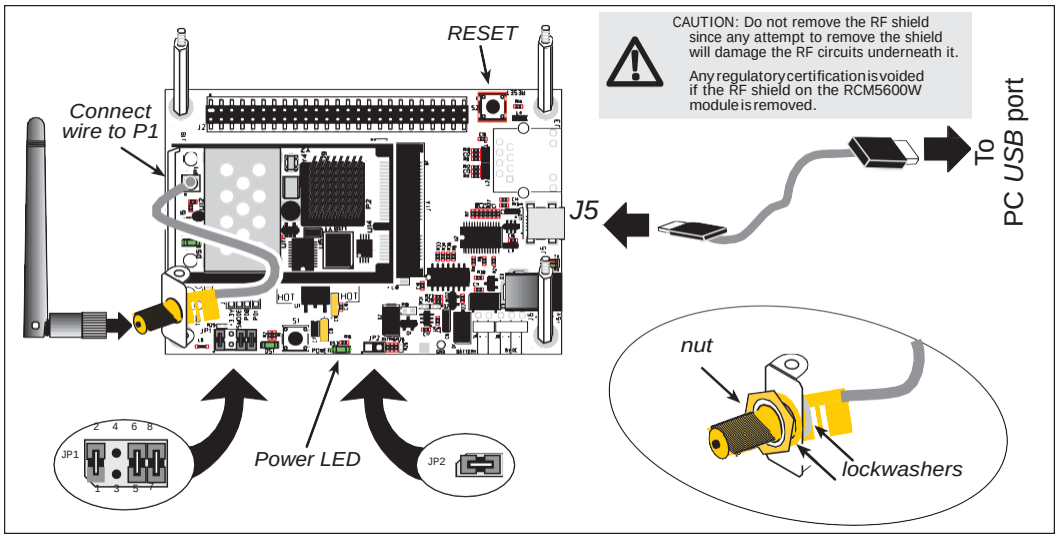

Figure 4. Connect Antenna and USB Cable

Alternate Antenna Connector Cable Installation

If you prefer, you may solder the RP-SMA antenna connector directly to the Interface Board at P1 as shown in the diagram at right. Before doing so, make sure that you use a long plastic standoff instead of the antenna bracket. Then connect the wire to connector P1 on the RCM5600W/RCM6600W, and attach the antenna to the RP-SMA connector.

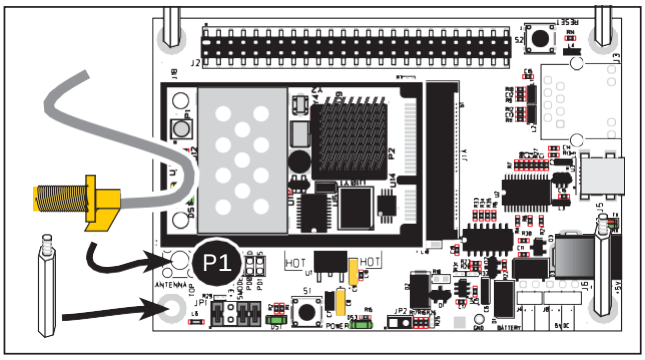

2.2.4 Step 4 — Connect USB Cable

The USB cable connects the RCM5600W/RCM6600W to the PC running Dynamic C to download programs and to monitor the module during debugging. It also supplies power to the Interface Board and the MiniCore via the USB interface.

Connect the USB cable between USB connector J5 on the Interface Board and your PC as shown in Figure 4. Note that the USB cable connectors are different at either end, so there is only one way to connect them between the PC and the Interface Board.

Downloaded from Arrow.com.

Your PC should recognize the new USB hardware, and the LEDs next to the USB connector on the Interface Board will flash — if you get an error message, you will have to install USB drivers. Drivers for Windows XP are available in the Dynamic C **Drivers\Rabbit USB Programming Cable\WinXP_2K** folder — double-click **DPInst.exe** to install the USB drivers. Drivers for other operating systems are available online at www.ftdichip.com/Drivers/VCP.htm.

The green power LED on the Interface Board should light up when you connect the USB cable. The RCM5600W/RCM6600W and the Interface Board are now ready to be used.

NOTE: A **RESET** button is provided on the Interface Board to allow a hardware reset without disconnecting power.

NOTE: Pins 1–2 on header JP1 on the Interface Board must be jumpered to download and debug applications and sample programs with Dynamic C running. Pins 1–2 should be left unjumpered to run an program already loaded in flash memory.

CAUTION: Do not jumper pins 1–3 on header JP1 on the Interface Board.

Alternate Power Supply Connections — Deluxe Development Kit

The deluxe Development Kit contains a separate AC adapter that may be used to supply power to the Interface Board and the RCM5600W/RCM6600W when the USB cable is not connected or when more power is needed than the USB cable is able to supply. The AC adapter may also be used to supply power when the USB cable is connected, in which case the power supply through the USB cable will be disconnected automatically.

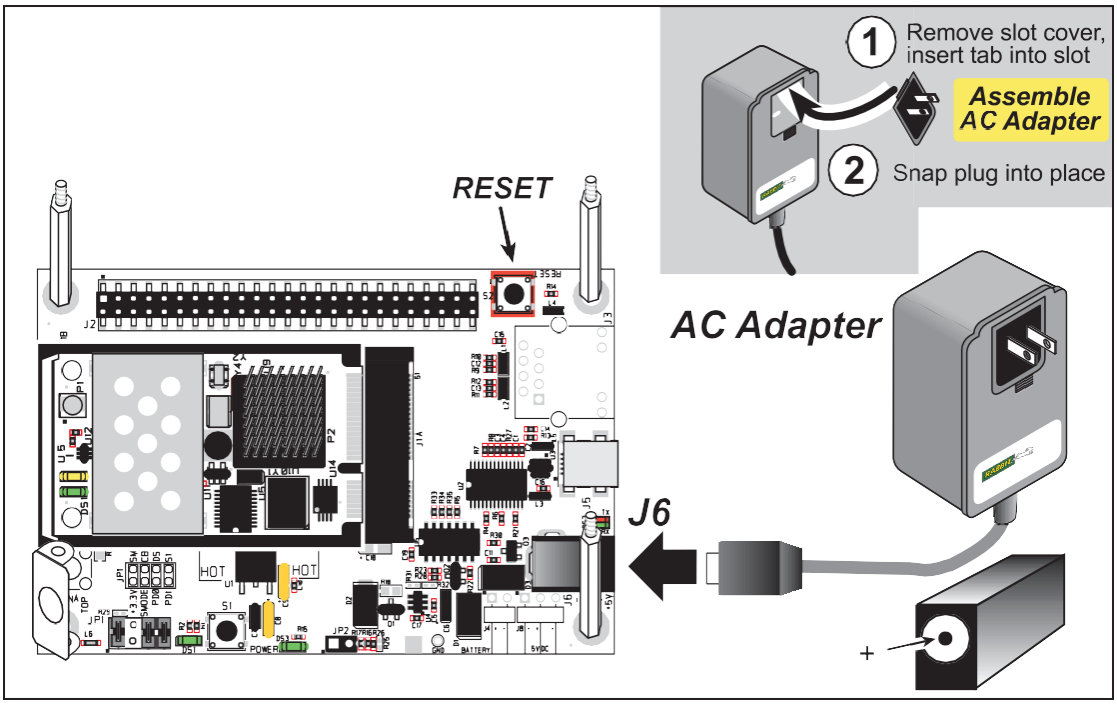

Figure 5. Alternate Power Supply Connections—Deluxe Development Kit

Downloaded from Arrow.com.

First, prepare the AC adapter for the country where it will be used by selecting the plug. The deluxe Development Kit presently includes Canada/Japan/U.S., Australia/N.Z., U.K., and European style plugs. Snap in the top of the plug assembly into the slot at the top of the AC adapter as shown in Figure 5, then press down on the spring-loaded clip below the plug assembly to allow the plug assembly to click into place. Release the clip to secure the plug assembly in the AC adapter.

Connect the AC adapter to DC input jack J6 on the Interface Board as shown in Figure 5. Plug in the AC adapter. The green power LED on the Interface Board should light up. The RCM5600W/RCM6600W and the Interface Board are now ready to be used.

Note that the center pin of J6 is positive.

2.3 Run a Sample Program

If you already have Dynamic C installed, you are now ready to test your programming connections by running a sample program. Start Dynamic C by double-clicking on the Dynamic C icon on your desktop or in your **Start** menu. Select the "Communications" tab in the Dynamic C **Options > Project Options** menu and verify that **Use USB to Serial Converter** is selected to support the USB cable. Choose **Store Program in RAM** on the "Compiler" tab for faster compiling when running sample programs. Click **OK**.

You may have to select the COM port assigned to the USB USB cable on your PC. In Dynamic C, select **Options > Project Options**, then select this COM port on the "Communications" tab, then click **OK**.

Now find the **WIFISCAN.C** sample program in the Dynamic C **Samples\WiFi** folder, open it with the **File** menu, then compile and run the sample program by pressing **F9**.

The Dynamic C **STDIO** window will display **Starting scan...**, and will display a list of access points/ad-hoc hosts similar to the one shown here.

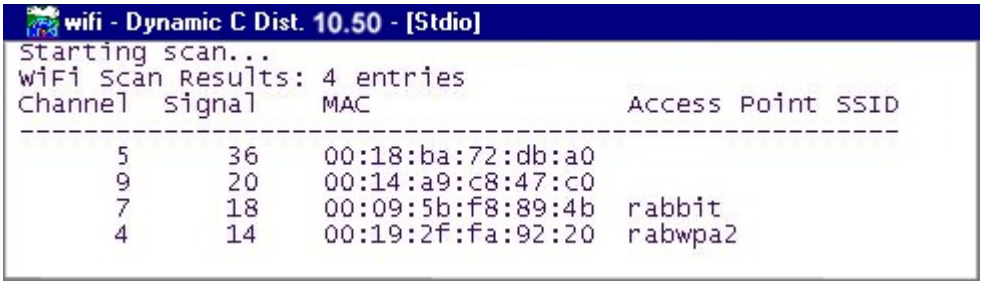

The following fields are shown in the Dynamic C **STDIO** window.

- Channel—the channel the access point is on (1–11).
- Signal—the signal strength of the access point.
- MAC—the hardware (MAC) address of access point.
- Access Point SSID—the SSID the access point is using.

Downloaded from Arrow.com.

2.3.1 Troubleshooting

It may be possible that your PC or laptop is unable to deliver enough current through the USB connection if you are not using a separate power supply. The RCM5600W/RCM6600W will not operate in this case, and the solution is to use a separate 5 V power supply as described in the ***Alternate Power Supply Connections*** section. Contact Technical Support (see Section 2.4.1) or visit our Web site if you would like to get the universal AC adapter from the Deluxe Development Kit.

If you receive the message **`Could Not Open Serial Port`**, check that the COM port assigned to the USB cable was identified and set up in Dynamic C as described above. This same error occurs when Windows has already allocated the COM port to another process.

If you receive the message **`No Rabbit Processor Detected`**, the USB cable may be connected to the wrong COM port, or the connection may be faulty. First, check both ends of the USB cable to ensure that it is firmly plugged into the PC and the USB connector in the Interface Board. Ensure that the module is firmly and correctly installed in its connector on the Interface Board.

If Dynamic C appears to compile the BIOS successfully, but you then receive a communication error message when you compile and load a sample program, it is possible that your PC cannot handle the higher program-loading baud rate. Try changing the maximum download rate to a slower baud rate as follows.

- Locate the **Serial Options** dialog on the "Communications" tab in the Dynamic C **Options > Project Options** menu. Select a slower Max download baud rate. Click **OK** to save.

If a program compiles and loads, but then loses target communication before you can begin debugging, it is possible that your PC cannot handle the default debugging baud rate. Try lowering the debugging baud rate as follows.

- Locate the **Serial Options** dialog on the "Communications" tab in the Dynamic C **Options > Project Options** menu. Choose a lower debug baud rate. Click **OK** to save.

Press **<Ctrl-Y>** to force Dynamic C to recompile the BIOS. You should receive a **`BIOS successfully compiled`** message once this step is completed successfully.

Downloaded from Arrow.com.

2.4 Where Do I Go From Here?

If the sample program ran fine, you are now ready to go on to other sample programs and to develop your own applications. The source code for the sample programs is provided to allow you to modify them for your own use. The ***RCM5600W/RCM6600W User's Manual*** also provides complete hardware reference information for the RCM5600W/RCM6600W, the Interface Board, the Prototyping Board, and the accessory boards in the Deluxe Development Kit.

For advanced development topics, refer to the ***Dynamic C User's Manual***, also in the online documentation set.

2.4.1 Technical Support

NOTE: If you purchased your RCM5600W/RCM6600W through a distributor or through a Rabbit partner, contact the distributor or partner first for technical support.

If there are any problems at this point:

- Use the Dynamic C **Help** menu to get further assistance with Dynamic C.
- Support for Rabbit Products forum at www.digi.com/support/forum/rabbit
- File a support request by going to www.digi.com, and selecting Support / Online Support Request.

Downloaded from Arrow.com.

3. RUNNING SAMPLE PROGRAMS

To develop and debug programs for MiniCore modules (and for all other Rabbit hardware), you must install and use Dynamic C. This chapter provides a tour of its major features with respect to the RCM5600W/RCM6600W.

3.1 Introduction

To help familiarize you with the Wi-Fi enabled MiniCore modules, Dynamic C includes several sample programs. Loading, executing and studying these programs will give you a solid hands-on overview of the MiniCore's capabilities, as well as a quick start with Dynamic C as an application development tool.

> **NOTE:** The sample programs assume that you have at least an elementary grasp of ANSI C. If you do not, see the introductory pages of the ***Dynamic C User's Manual*** for a suggested reading list.

In order to run the sample programs discussed in this chapter and elsewhere in this manual,

1. Your MiniCore must be installed on the Interface Board as described in Chapter 2, "Getting Started."
2. Dynamic C must be installed and running on your PC.
3. The USB cable must connect the Interface Board to your PC.
4. Power must be applied to the MiniCore through the Interface Board.

Refer to Chapter 2, "Getting Started," if you need further information on these steps.

To run a sample program, open it with the **File** menu (if it is not still open), then compile and run it by selecting **Run** in the **Run** menu (or press **F9**). The MiniCore must be in Program Mode (see Figure 14) and must be connected to a PC using the USB cable.

Complete information on Dynamic C is provided in the ***Dynamic C User's Manual***.

Downloaded from Arrow.com.

3.2 Sample Programs

Of the many sample programs included with Dynamic C, several are specific to the RCM5600W or RCM6600W. These programs will be found in the **SAMPLES\RCM5600W** and **SAMPLES\RCM6600W** folders respectively. Sample programs in the **SAMPLES** folder one level up are generic samples that can be run on any Rabbit-based product.

Before you compile and run the following sample programs, make sure that pins 1–2, 5–6, and 7–8 on header JP1 of the Interface Board are jumpered. The pins on header JP2 must also be jumpered. Each sample program has comments that describe the purpose and function of the program. Follow the instructions at the beginning of the sample program.

CAUTION: Do not jumper pins 1–3 on header JP1 on the Interface Board.

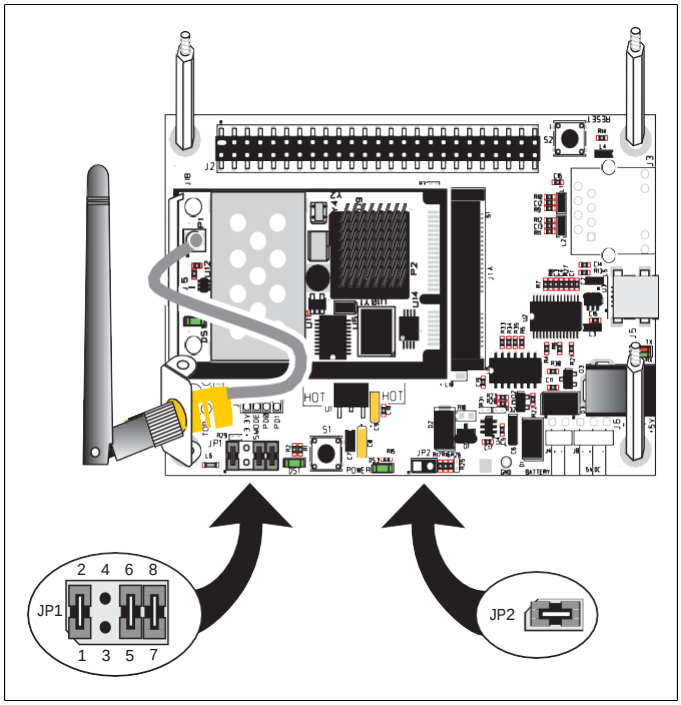

- **FLASHLED.C**—demonstrates the use of costatements to flash LED DS1 on the Interface Board. PD0 on the MiniCore is used to drive the LED.
- **TOGGLESWITCH.C**—monitors switch S1 and LED DS1 on the Interface Board. LED DS1 on the Interface Board is turned on and off when you press switch S1. PD0 on the MiniCore is used to drive the LED, and PD1 detects the activity on switch S1.

Downloaded from Arrow.com.

The Digital I/O accessory board may also be used to run the **TOGGLESWITCH.C** and the **SERIALTOSERIAL.C** sample programs. This accessory board is included only with the Deluxe Development Kit.

To install the Digital I/O accessory board, insert the strip of header pins included with the accessory board into the socket at J12 on the bottom side of the Digital I/O accessory board. Then line up the Digital I/O accessory board with the Interface Board standoffs/ connectors and install the Digital I/O accessory board pins into socket J2 on the Interface Board. Secure the Digital I/O accessory board with the long plastic standoffs/connectors from above as shown in Figure 6—note that one plastic standoff/connector needs to be inserted “upside down” to secure the Digital I/O accessory board to the antenna bracket.

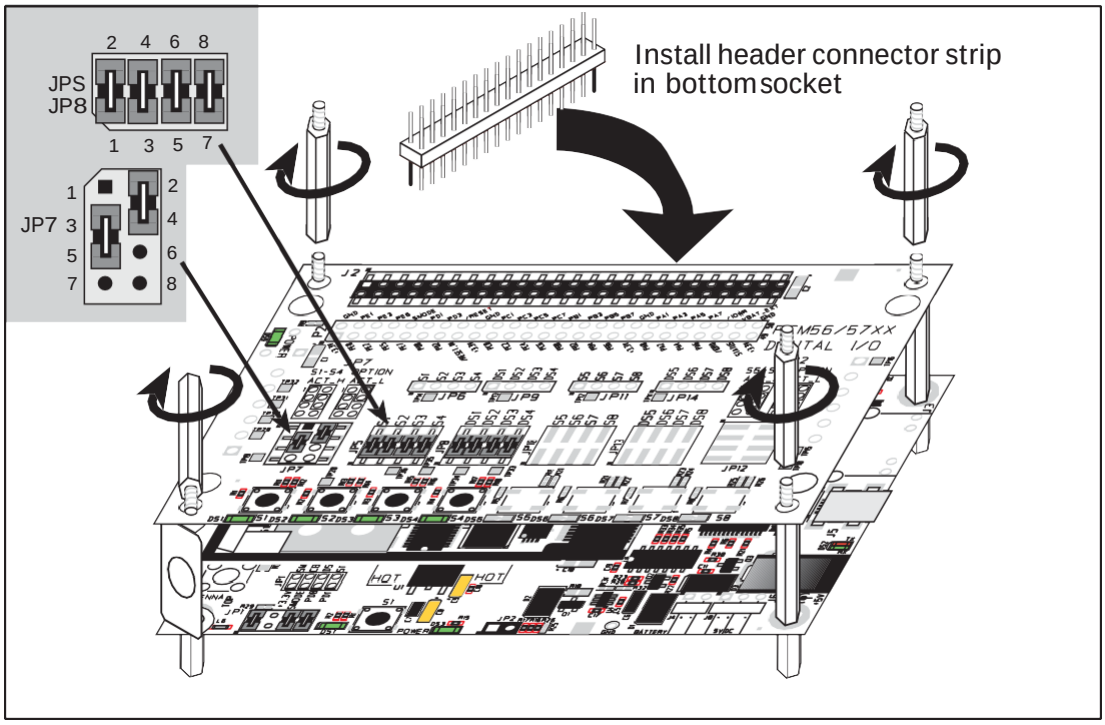

Figure 6. Install Digital I/O Accessory Board

Pins 1–2, 3–4, 5–6, and 7–8 on headers JP5 and JP8 on the Digital I/O accessory board must be jumpered. Pins 2–4 and 3–5 on header JP7 on the Digital I/O accessory board must also be jumpered.

Uncomment the following line in the sample programs when you are using the Digital I/O accessory board.

```
#define DIGITAL_IO_ACCESSORY
```

- **TOGGLESWITCH.C**—monitors switches S1, S2, S3, and S4 on the Digital I/O accessory board and lights LEDs DS1–DS4 when the corresponding pushbutton switch is pressed. LEDs DS1–DS2 on the Digital I/O accessory board are controlled by PA4–PA7, and switches S1–S4 are controlled by PB4–PB7 respectively.

Downloaded from Arrow.com.

The **SERIALTOSERIAL.C** sample program is in the **SAMPLES\RCM5600W\SERIAL** folder.

- **SERIALTOSERIAL.C**—monitors switches S1, S2, S3, and S4 on the Digital I/O accessory board and lights LEDs DS1–DS4 when the corresponding pushbutton switch is pressed. LEDs DS1–DS2 on the Digital I/O accessory board are controlled by PA4–PA7, and switches S1–S4 are controlled by PB4–PB7 respectively. The sample program sends messages from Serial Port B to Serial Port C to indicate that a switch was pressed. Messages received by Serial Port C are displayed in Dynamic C's **STDIO** window.

  Before you compile and run this sample program, you will need to connect J2 pin 19 (PC0/TxD) to J2 pin 22 (PC3/RxC) *or* the corresponding holes on P2.

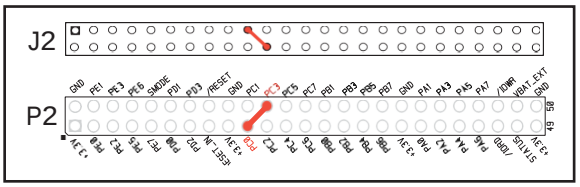

  If you are using the Serial Communication accessory board, you should connect pin 3 (TXD) on header J3 to pin 5 (RXC) on header J4 instead.

Downloaded from Arrow.com.

4. HARDWARE REFERENCE

Chapter 4 describes the hardware components and principal hardware subsystems of the MiniCores. Appendix A, "RCM5600W and RCM6600W Specifications," provides complete physical and electrical specifications.

Figure 7 shows the Rabbit-based subsystems designed into the RCM5600W.

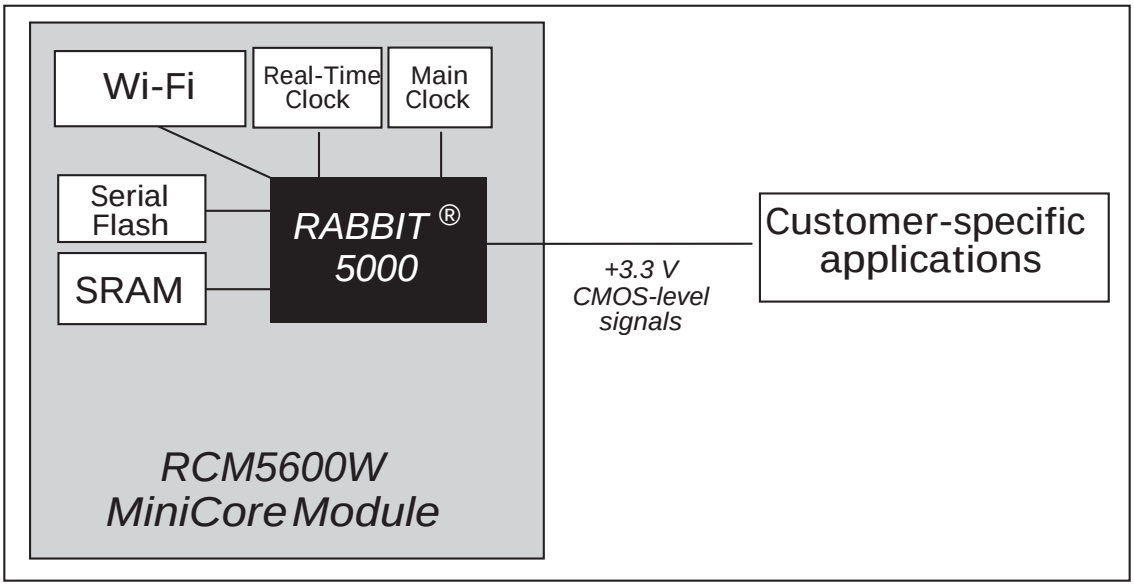

Figure 7. RCM5600W Subsystems

Downloaded from Arrow.com.

Figure 8 shows the Rabbit-based subsystems designed into the RCM6600W.

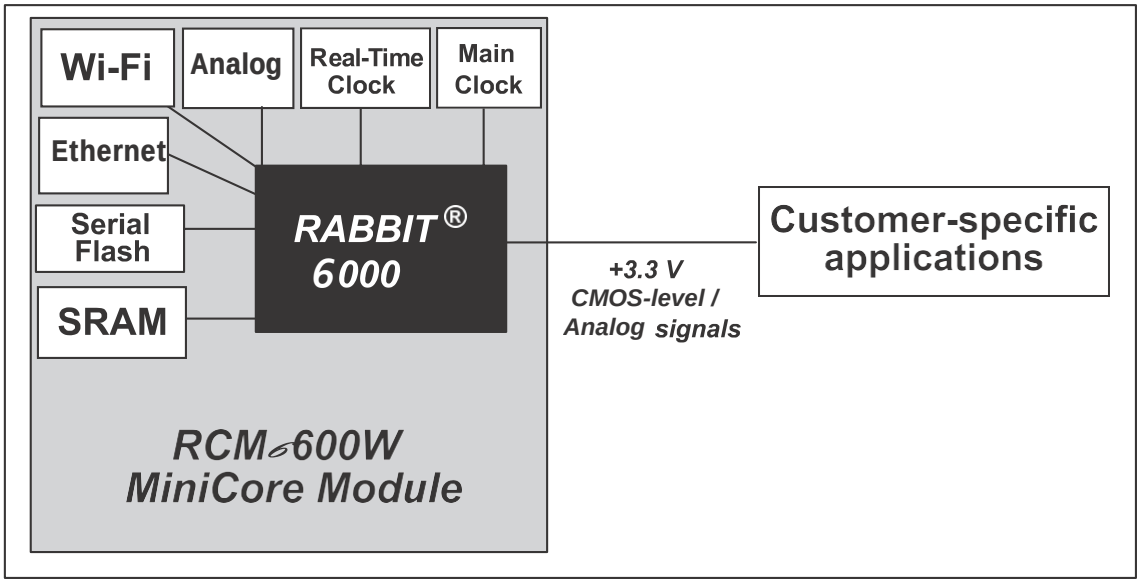

Figure 8. RCM6600W Subsystems

Downloaded from Arrow.com.

4.1 RCM5600W/RCM6600W Digital Inputs and Outputs

Figure 9 shows the RCM5600W pinouts for the edge connector.

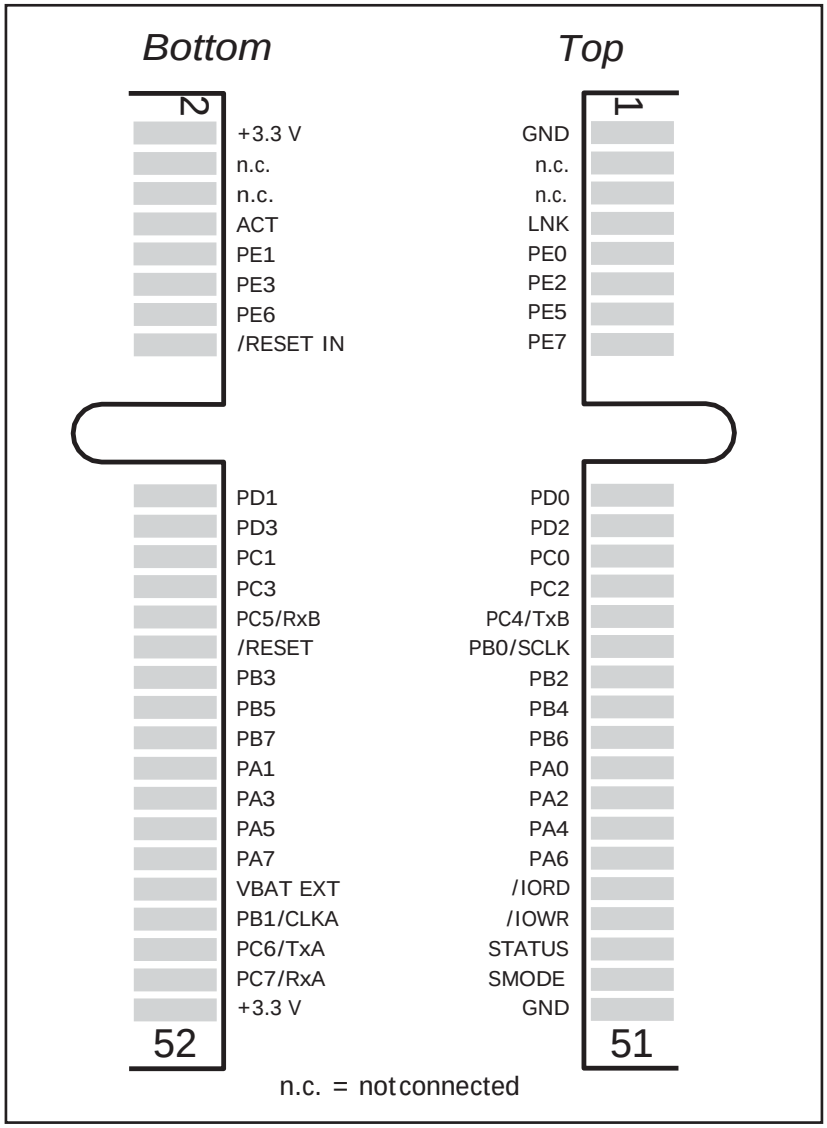

Figure 9. RCM5600W Pinouts

Downloaded from Arrow.com.

Figure 10 shows the RCM6600W pinouts for the edge connector.

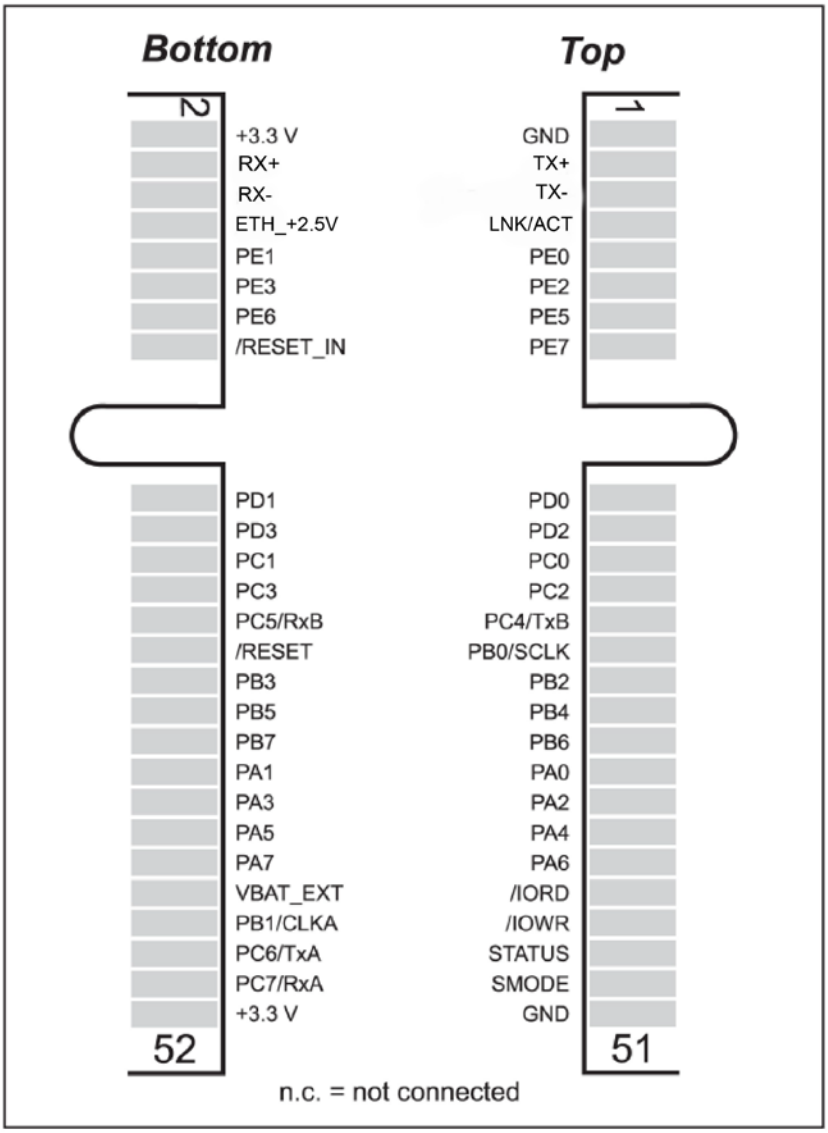

Figure 10. RCM6600W Pinouts

The edge connectors are designed to interface with a 52-pin mini PCI Express socket. Figure 11 shows the use of the Rabbit 5000 microprocessor ports in the RCM5600W/RCM5650W modules.

Downloaded from Arrow.com.

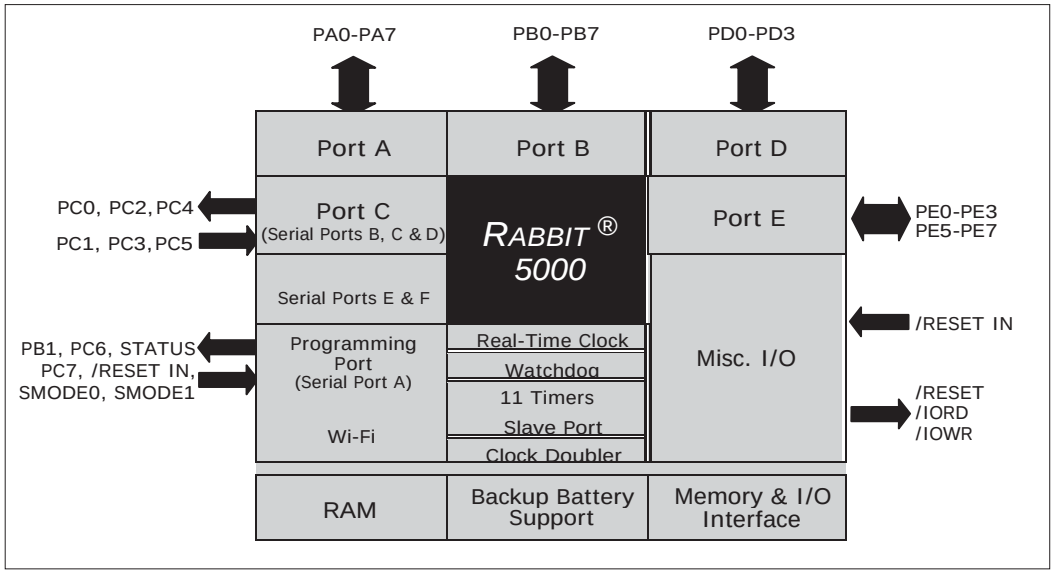

Figure 11. Use of Rabbit 5000 Ports

Figure 12 shows the use of the Rabbit 6000 microprocessor ports in the RCM6600W/RCM6650W modules.

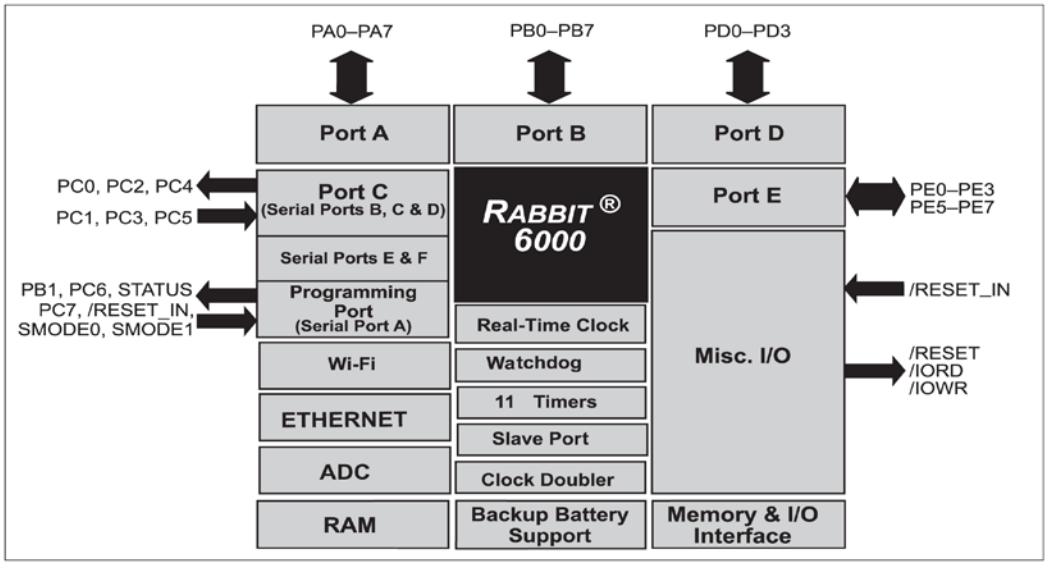

Figure 12. Use of Rabbit 6000 Ports

The ports on the Rabbit 5000 microprocessor used in the RCM5600W/RCM5650W are configurable, and so the factory defaults can be reconfigured. Table 2 lists the Rabbit 5000/ 6000 factory defaults and the alternate configurations.

Table 2. RCM5600W/RCM6600W Pinout Configurations

Pin	Pin Name	Default Use	Alternate Use	Notes
1	GND			

Downloaded from Arrow.com.

Table 2. RCM5600W/RCM6600W Pinout Configurations (continued)

Pin	Pin Name	Default Use	Alternate Use	Notes
2	+3.3 V			
3	Ethernet_Tx +	Ethernet		RCM6600W only (no connect on RCM5600W)
4	Ethernet_Rx +			
5	Ethernet_Tx -			
6	Ethernet_Rx -			
7	LNK/ACT			User programmable combined WiFi/Ethernet Link/Activity through PG0 GPIO pin
8	Ethernet_2.5V			2.5V supply for the Center Tap connection of the Ethernet magnetics
9	PE0_AD0	Input/Output	I/O Strobe I0 A20 Timer C0 TCLKF INT0 QRD1B	Configurable as analog input on RCM6600W, as a pair with PE1/AIN1
10	PE1_AD1	Input/Output	I/O Strobe I1 A21 Timer C1 RXD/RCLKF INT1 QRD1A Input Capture	Configurable as analog input on RCM6600W, as a pair with PE0/AIN0
11	PE2_AD2	Input/Output	I/O Strobe I2 A22 Timer C2 TXF DREQ0 QRD2B	Configurable as analog input on RCM6600W, as a pair with PE3/AIN3
12	PE3_AD3	Input/Output	I/O Strobe I3 A23 Timer C3 RXC/RXF/SCLKD DREQ1 QRD2A Input Capture	Configurable as analog input on RCM6600W, as a pair with PE2/AIN2

Downloaded from Arrow.com.

Table 2. RCM5600W/RCM6600W Pinout Configurations (continued)

Pin	Pin Name	Default Use	Alternate Use	Notes
13	PE5	Input/Output	I/O Strobe I5 INT1 PWM1 RXB/RCLKE Input Capture	
14	PE6	Input/Output	I/O Strobe I6 PWM2 TXE DREQ0	Serial Port E
15	PE7	Input/Output	I/O Strobe I7 PWM3 RXA/RXE/SCLKC DREQ1 Input Capture	
16	/RESET_IN	Input		Input to Reset Generator
17	PD0	Input/Output	I/O Strobe I0 Timer C0 D8 INT0 SCLKD/TCLKF QRD1B	
18	PD1	Input/Output	IA6 I/O Strobe I1 Timer C1 D9 INT1 RXD/RCLKF QRD1A Input Capture	

Downloaded from Arrow.com.

Table 2. RCM5600W/RCM6600W Pinout Configurations (continued)

Pin	Pin Name	Default Use	Alternate Use	Notes
19	PD2	Input/Output	I/O Strobe I2 Timer C2 D10 DREQ0 TXF/SCLKC QRD2B	Serial Port F
20	PD3	Input/Output	IA7 I/O Strobe I3 Timer C3 D11 DREQ1 RXC/RXF QRD2A Input Capture	
21	PC0	Input/Output	TXD I/O Strobe I0 Timer C0 TCLKF	Serial Port D
22	PC1	Input/Output	RXD/TXD I/O Strobe I1 Timer C1 RCLKF Input Capture	
23	PC2	Input/Output	TXC/TXF I/O Strobe I2 Timer C2	Serial Port C
24	PC3	Input/Output	RXC/TXC/RXF I/O Strobe I3 Timer C3	
25	PC4*	Input/Output	TXB I/O Strobe I4 PWM0	Serial Port B with PB0, used for serial flash and Wi-Fi signal strength
26	PC5*	Input/Output	RXB/TXB I/O Strobe I5 PWM1	
27	PB0*	Input/Output	SCLKB External I/O Address IA6	SCLKB (used by serial flash) with PC4, PC5, used for serial flash and Wi-Fi signal strength

Downloaded from Arrow.com.

Table 2. RCM5600W/RCM6600W Pinout Configurations (continued)

Pin	Pin Name	Default Use	Alternate Use	Notes
28	/RESET	Reset output		Output from the Reset Generator
29	PB2	Input/Output	/SWR External I/O Address IA0	
30	PB3	Input/Output	/SRD External I/O Address IA1	
31	PB4	Input/Output	SA0 External I/O Address IA2	
32	PB5	Input/Output	SA1 External I/O Address IA3	
33	PB6	Input/Output	/SCS External I/O Address IA4	
34	PB7	Input/Output	/SLAVATN External I/O Address IA5	
35–42	PA[0:7]	Input/Output	Slave port data bus (SD0–SD7) External I/O data bus (ID0–ID7)	
43	/IORD	Output		External I/O read strobe
44	VBAT_EXT	Battery input		
45	/IOWR	Output		External I/O write strobe
46	PB1*	Input/Output	SCLKA External I/O Address IA7	Programming port SCLKA
47	STATUS*	Output		Programming port

Downloaded from Arrow.com.

Table 2. RCM5600W/RCM6600W Pinout Configurations (continued)

Pin	Pin Name	Default Use	Alternate Use	Notes
48	PC6*	Input/Output	TXA/TXE I/O Strobe I6 PWM2	Programming port
49	SMODE*	Input		
50	PC7*	Input/Output	RXA/TXA/RXE I/O Strobe I7 PWM3 SCLKC Input Capture	
51	GND			
52	+3.3 V			

* These pins should be used cautiously (if at all) in most applications, since they have specific or dedicated functionality related to programming the MiniCore module, or have connections to on-core peripherals. Consult Rabbit Technical Support for details.

4.1.1 Memory I/O Interface

The Rabbit 5000 address lines (A0–A19) and data lines (D0–D7) are routed internally to the onboard SRAM, and the Rabbit 6000 has internal RAM as well as external RAM (RCM6650W only). I/O write (/IOWR) and I/O read (/IORD) are available for interfacing to external devices.

Parallel Port A can be used as an external I/O data bus. Parallel Port B pins PB2–PB7 can also be used as an external I/O address bus.

When using the external I/O bus for any other reason, you must add the following line at the beginning of your program.

```
#define PORTA_AUX_IO    // required to enable external I/O bus
```

Selected pins on Parallel Ports D and E as specified in Table 2 may be used for input capture, quadrature decoder, DMA, and pulse-width modulator purposes.

4.1.2 Other Inputs and Outputs

The status, /RESET_IN, and SMODE I/O are normally associated with the programming port. Since the status pin is not used by the system once a program has been downloaded and is running, the status pin can then be used as a general-purpose CMOS output. The programming port is described in more detail in Section 4.2.2.

/RESET_IN is an external input used to reset the Rabbit microprocessor. /RESET is an output from the reset circuitry that can be used to reset other peripheral devices.

The two SMODE pins, SMODE0 and SMODE1, are tied together to +3.3 V via a pullup resistor, and may be used as a special input when the RCM5600W/RCM6600W is operat-

Downloaded from Arrow.com.

ing in the Run Mode. The logic state of these two pins determines the startup procedure after a reset.

4.1.3 Analog Inputs

On the RCM6600W and RCM6650W only, four of the edge connector pins may be configured as analog inputs. On the MiniCore module, a multiplexer may be switched at runtime between routing the edge pin to either the PE0-3 digital I/Os, or to the on-chip ADC inputs of the Rabbit 6000. The multiplexer connects the edge pins in pairs: PE0 and PE1 may be switched together, or PE2 and PE3. Thus, zero, two or four analog inputs are available.

See the **SAMPLES/RCM6600W/ADC** folder for demonstration of the analog input facility.

Downloaded from Arrow.com.

4.2 Serial Communication

The MiniCore module does not have any serial level converters directly on the board. However, a serial level converter or protocol converter may be incorporated on the board the RCM5600W/RCM6600W is mounted on. For example, the Serial Communication accessory board in the Deluxe Development Kit has an RS-232 transceiver, and the Interface Board has USB connections.

4.2.1 Serial Ports

There are six serial ports designated as Serial Ports A, B, C, D, E, and F. All six serial ports can operate in an asynchronous mode up to the baud rate of the system clock divided by 8. An asynchronous port can handle 7 or 8 data bits. A 9th bit address scheme, where an additional bit is sent to mark the first byte of a message, is also supported.

Serial Port A is normally used as a programming port, but may be used either as an asynchronous or as a clocked serial port once application development has been completed and the RCM5600W/RCM6600W is operating in the Run Mode.

Serial Port B, shared by the RCM5600W/RCM6600W module's serial flash and by the A/D converter in the Wi-Fi circuit, is set up as a clocked serial port. Since this serial port is set up for synchronous serial communication, you will lose the peripheral functionality if you try to use the serial port in the asynchronous mode.

> **NOTE:** Since Serial Port B is shared, exercise care if you attempt to use Serial Port B for other serial communication. Your application will have to manage the sharing negotiations to avoid conflicts when reading or writing to the devices already using Serial Port B. Any conflict with Serial Port B while the RCM5600W/RCM6600W is powering up may prevent an application from loading from the serial flash when the RCM5600W/RCM6600W powers up or resets. Do not drive or load the Serial Port B or SCLKB (PC4, PC5, and PB0) pins while the RCM5600W/RCM6600W is powering up. The serial port B pins should not be reallocated for general purpose I/O.

Serial Ports C and D can also be operated in the clocked serial mode. In this mode, a clock line synchronously clocks the data in or out. Either of the two communicating devices can supply the clock.

Serial Ports E and F can also be configured as SDLC/HDLC serial ports. The IrDA protocol is also supported in SDLC format by these two ports. Serial Ports E and F must be configured before they can be used. The following macros show one way to do this.

```
#define SERE_TXPORT PEDR
#define SERE_RXPORT PEDR

#define SERF_TXPORT PFDR
#define SERF_RXPORT PFDR
```


Downloaded from Arrow.com.

Table 2 summarizes the possible parallel port pins for the serial ports and their clocks.

Table 3. Rabbit 5000 Serial Port and Clock Pins

Serial Port A*	TXA	PC6*, PC7*	Serial Port E	TXE	PE6, PC6*
	RXA	PC7*,PE7		RXE	PE7, PC7*
	SCLKA	PB1*		RCLKE	PE5, PC5*
Serial Port B*	TXB	PC4*, PC5*		TCLKE	PE4, PC4*
	RXB	PC5*, PE5	Serial Port F	TXF	PD2, PE2, PC2
	SCLKB	PB0*		RXF	PD3, PE3, PC3
Serial Port C	TXC	PC2, PC3		RCLKF	PD1, PE1, PC1
	RXC	PC3, PD3, PE3		TCLKF	PD0, PE0, PC0
	SCLKC	PD2, PE2, PE7, PC7*			
Serial Port D	TXD	PC0, PC1	RCLKE/TCLKE and RCLKF/TCLKF must be selected to be on the same parallel port as RXE/TXE and RXF/TXF respectively.		
	RXD	PC1, PD1, PE1			
	SCLKD	PD0, PD3, PE0, PE3, PC3			

* In general, these serial ports or pins should be avoided for general use unless the designer is intimately familiar with their possibly conflicting uses. Contact Rabbit Technical Support for details.

4.2.2 Programming Port

The MiniCore programming port is accessed via the USB connector (J5) on the Interface Board. The programming port uses the Rabbit microprocessor's Serial Port A for communication. Dynamic C uses the programming port to download and debug programs.

The programming port is also used to cold-boot the Rabbit microprocessor on the RCM5600W/RCM6600W after a reset.

Downloaded from Arrow.com.

4.3 Wi-Fi

Figure 13 shows a functional block diagram for the Wi-Fi circuits.

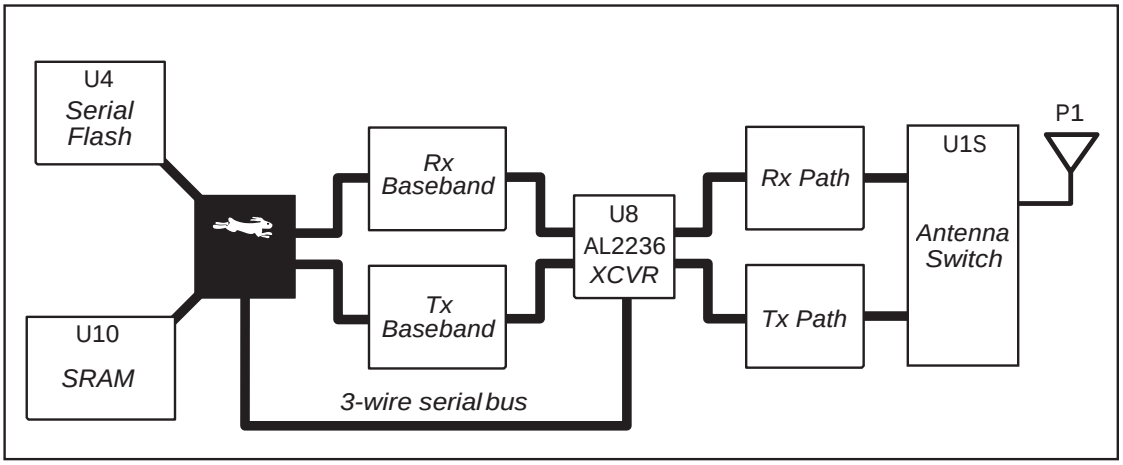

Figure 13. RCM5600W/RCM6600W Wi-Fi Block Diagram

The Wi-Fi transmission is controlled by the Rabbit chip, which contains the Wi-Fi Media Access Control (MAC). The Rabbit microprocessor implements the 802.11b/g baseband MAC functionality, and controls the 802.11b/g integrated Airoha AL2236 transceiver.

Program code is stored in the serial flash and is loaded into an SRAM for execution when power is applied to the RCM5600W/RCM6600W modules. The data interface between the processor MAC and the AL2236 transceiver consists of a D/A converter and an A/D converter. Both converters convert "I" and "Q" data samples at a rate of 40 MHz.

The AL2236 is a single-chip transceiver with integrated power amplifier for the 2.4 GHz Industrial, Scientific, and Medical (ISM) band. It is configured and controlled by the Rabbit via a 3-wire serial data bus. The AL2236 contains the entire receiver, transmitter, VCO, PLL, and power amplifier necessary to implement an 802.11b/g radio.

The AL2236 can transmit and receive data at up to 11Mbits/s in the 802.11b mode and at up to 54 Mbits/s in the 802.11g mode. It supports 802.11b/g channels 1–13 (2.401 GHz to 2.472 GHz). Channel 14 is not used. The data modulate the channel carrier in such a way so as to produce a spread spectrum signal within the 22 MHz channel bandwidth of the selected channel. The channel numbers and associated frequencies are listed below in Table 3.

The Wi-Fi channels have a certain amount of overlap with each other. The further apart two channel numbers are, the less the likelihood of interference. If you encounter interference with a neighboring WLAN, change to a different channel. For example, use channels 1, 6, and 11 to minimize any overlap.

Downloaded from Arrow.com.

Table 4. Wi-Fi Channel Allocations

Channel	Centre Frequency (MHz)	Frequency Spread (MHz)
1	2.412	2.401-2.423
2	2.417	2.406-2.428
3	2.422	2.411-2.433
4	2.427	2.416-2.438
5	2.432	2.421-2.443
6	2.437	2.426-2.448
7	2.442	2.431-2.453
8	2.447	2.436-2.458
9	2.452	2.441-2.463
10	2.457	2.446-2.468
11	2.462	2.451-2.473
12[1]	2.467	2.456-2.478
13[1]	2.472	2.461-2.483
14[1]	2.484	2.473-2.495

[1]These channels are disabled for units delivered for sale in the United States and Canada.

Many countries specify the channel range and power limits for Wi-Fi devices operated within their borders, and these limits are set automatically in the RCM5600W/RCM6600W in firmware according to the country or region. For example, only channels 1–11 are authorized for use in the United States or Canada, and so channels 12 and 13 are disabled. Table 4 provides additional information on which channels are allowed in selected countries. *Any attempt to operate a device outside the allowed channel range or power limits will void your regulatory approval to operate the device in that country.*

Downloaded from Arrow.com.

The following regions have macros and region numbers defined for convenience.

Table 5. Worldwide Wi-Fi Macros and Region Numbers

Region	Macro	Region Number	Channel Range
Americas	**IFPARAM_WIFI_REGION_AMERICAS**	0	1–11
Mexico	**IFPARAM_WIFI_REGION MEXICO_INDOORS**	1	1–11 (indoors)
	IFPARAM_WIFI_REGION_MEXICO_OUTDOORS	2	9–11 (outdoors)
Canada	**IFPARAM_WIFI_REGION_CANADA**	3	1–11
Europe, Middle East, Africa, except France	**IFPARAM_WIFI_REGION_EMEA**	4	1–13
France	**IFPARAM_WIFI_REGION_FRANCE**	5	10–13
Israel	**IFPARAM_WIFI_REGION_ISRAEL**	6	3–11
China	**IFPARAM_WIFI_REGION_CHINA**	7	1–11
Japan	**IFPARAM_WIFI_REGION_JAPAN**	8	1–14*
Australia	**IFPARAM_WIFI_REGION_AUSTRALIA**	9	1–11

* Channel 14 is not available for the RCM5600W/RCM6600W.

The same omnidirectional antenna is used to transmit and receive the 802.11b/g RF signal. An antenna switch isolates the high-power RF Tx signal path from the RF Rx signal path. The antenna switch at U15 works by alternately connecting the antennas to either the AL2236 Tx output or to the AL2236 Rx input. In order to support this antenna-sharing scheme, the RCM5600W/RCM6600W module operates the radio in a half-duplex mode so that receive and transmit operations never occur at the same time

The RF connector on the Interface Board is an RP-SMA connector with its outer casing attached to the RCM5600W/RCM6600W ground.

There are two LEDs close to the RF shield, a green LED at DS1 (**LINK**) to indicate association with the Wi-Fi access point, and a yellow LED at DS2 (**ACT**) to indicate activity.

4.3.1 Antenna Grounding Requirements

When deploying the RCM5600W/RCM6600W in a production environment, take care to ensure that the antenna is properly grounded via the RP-SMA connector and the U.FL to RP-SMA connector cable. The RP-SMA connector must be firmly attached to a bracket or soldered to a grounded location. If you are using a bracket, it must make firm contact with a ground such as the plated, grounded mounting hole provided on the Interface Board.

Downloaded from Arrow.com.

4.4 Ethernet (RCM6600W and RCM6650W only)

The RCM6600W supports use of dual network interfacing. Wi-Fi is described in the previous section. The Ethernet peripheral on the RCM6600W is practically identical to that on the RCM6700. Refer to Rabbit's Technical Note TN266, *PCB Layout for the Ethernet PHY Interface*, provides further details about designing your own PHY interface. Also, the *MiniCore RCM5700/RCM6700 User's Manual* provides additional information regarding the Ethernet interface.

4.5 Programming Modes

The USB cable is used to connect the programming port of the RCM5600W/RCM6600W to a PC USB port via the Interface Board.

Whenever the MiniCore module is reset, the operating mode is determined by the state of the SMODE pins. The MiniCore is automatically in Program Mode when the SMODE pins, which are tied together, are pulled up to +3.3 V. This happens when the MiniCore is installed on the Interface Board, and pins 1–2 on header JP1 on the Interface Board are jumpered. When the SMODE pins are pulled low by removing the jumpers from pins 1–2 on header JP1 on the Interface Board, the Rabbit microprocessor will operate in the Run Mode once it is reset. The USB cable may be used for a serial connection to the programming port when the MiniCore is operating in the Run Mode.

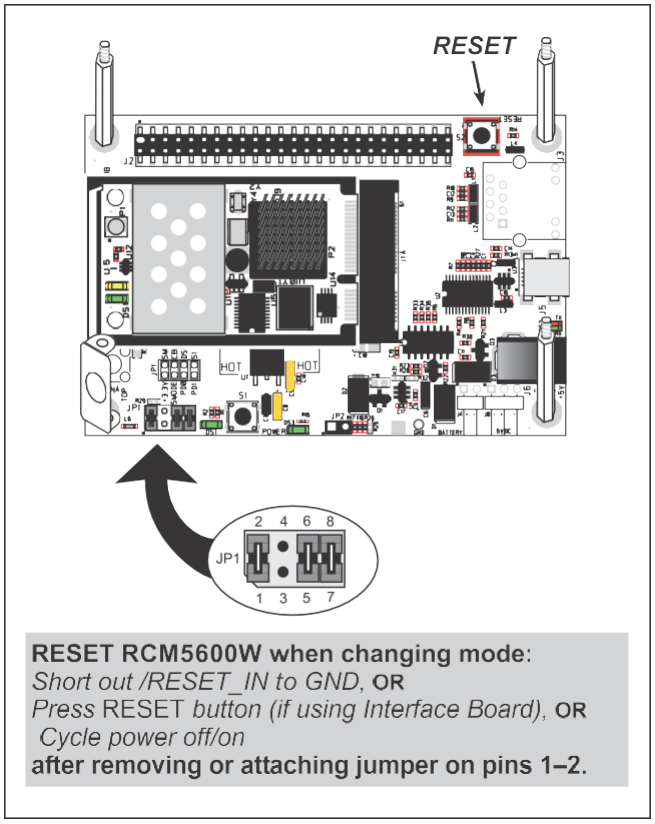

Figure 14. Switching Between Program Mode and Run Mode

Downloaded from Arrow.com.

A program “runs” in either mode, but can only be downloaded and debugged when the MiniCore is in the Program Mode.

Refer to the ***Rabbit 5000 (or 6000) Microprocessor User’s Manual*** for more information on the programming port.

4.5.1 Standalone Operation of the RCM5600W/RCM6600W

The MiniCore must be programmed via the Interface Board or via a similar arrangement on a customer-supplied board. Once the MiniCore has been programmed successfully, reset it by cycling power off/on or by pressing the **RESET** button on the Interface Board. The jumper across pins 1–2 on header JP1 on the Interface Board must be removed in order for the MiniCore to operate in the Run Mode after it is reset. The MiniCore module may now be removed from the Interface Board for end-use installation.

CAUTION: Power to the Interface Board or other boards should be disconnected when removing or installing your RCM5600W/RCM6600W module to protect against inadvertent shorts across the pins or damage to the RCM5600W/RCM6600W if the pins are not plugged in correctly. Do not reapply power until you have verified that the RCM5600W/RCM6600W module is plugged in correctly.

Downloaded from Arrow.com.

4.6 Other Hardware

4.6.1 Clock Doubler or PLL

The RCM5600W takes advantage of the Rabbit 5000 microprocessor's internal clock doubler. A built-in clock doubler allows half-frequency crystals to be used to reduce radiated emissions. The 73.73 MHz frequency specified for the RCM5600W model is generated using a 36.864 MHz crystal.

The clock doubler should not be disabled since Wi-Fi operations depend highly on CPU resources.

The RCM6600W has an internal PLL (Phase Locked Loop) which allows the main processor to be clocked at integer multiples of 12.5MHz between 25MHz and 162.5MHz. For operation with Wi-Fi, at least 100MHz should be selected. The default clock frequency will be 162.5MHz. Operation below 25MHz is inadvisable since the contents of the internal fast RAM may be lost (since this is a type of dynamic RAM).

4.6.2 Spectrum Spreader

The Rabbit 5000 and 6000 feature a spectrum spreader, which helps to mitigate EMI problems. The spectrum spreader is on by default (provided a slow clock speed is selected), but it may also be turned off or set to a stronger setting. The means for doing so is through a simple configuration macro as shown below.

1. Select the "Defines" tab from the Dynamic C **Options > Project Options** menu.
2. Normal spreading is the default, and usually no entry is needed. If you need to specify normal spreading, add the line

   ```
   ENABLE_SPREADER=1
   ```

   For strong spreading, add the line

   ```
   ENABLE_SPREADER=2
   ```

   To disable the spectrum spreader, add the line

   ```
   ENABLE_SPREADER=0
   ```

   NOTE: The strong spectrum-spreading setting is not recommended since it may limit the maximum clock speed or the maximum baud rate. It is unlikely that the strong setting will be used in a real application.
3. Click **OK** to save the macro. The spectrum spreader will be set according to the macro value whenever a program is compiled using this project file.

NOTE: Refer to the ***Rabbit 5000 (or 6000) Microprocessor User's Manual*** for more information on the spectrum-spreading setting and the maximum clock speed.

Downloaded from Arrow.com.

4.7 Memory

4.7.1 SRAM

RCM5600W boards have 1MB of SRAM installed at U10. RCM6600W boards use the on-chip 1MB fast RAM, giving very high bus speed and no wait states.

4.7.2 Flash Memory

RCM5600W/RCM6600W boards have 1MB of serial flash memory installed at U4. The RCM5650W/RCM6650W have 4MB of serial flash memory installed at U4.

A "user block" area is defined to store persistent data. The function calls **`writeUserBlock()`** and **`readUserBlock()`** are provided for this. Refer to the ***Dynamic C Function Reference Manual*** for additional information.

4.7.3 Encryption RAM Memory

The tamper detection feature of the Rabbit 5000 and 6000 microprocessors can be used to detect any attempt to enter the bootstrap mode. When such an attempt is detected, the 32 bytes of VBAT RAM memory in the Rabbit chip is erased.

Downloaded from Arrow.com.

5. SOFTWARE REFERENCE

Dynamic C is an integrated development system for writing embedded software. It runs on a Windows-based PC and is designed for use with single-board computers and other devices based on the Rabbit microprocessor. Chapter 5 describes the libraries and function calls related to the RCM5600W/RCM6600W.

5.1 More About Dynamic C

Dynamic C has been in use worldwide since 1989. It is specially designed for programming embedded systems, and features quick compile and interactive debugging. A complete reference guide to Dynamic C is contained in the ***Dynamic C User's Manual***.

Since the RCM5600W/RCM6600W has a serial flash memory, all software development must be done in the static SRAM. The flash memory and SRAM options are selected with the **Options > Program Options > Compiler** menu.

> **NOTE:** An application should be compiled directly to the SRAM on the RCM5600W/RCM6600W module using the **Store Program in RAM** compiler option while debugging for faster upload times and to save wear on the flash, but should be recompiled to **Store Program in Flash** for use after the USB cable is disconnected. Your final code must always be stored in flash memory for reliable operation.

Developing software with Dynamic C is simple. Users can write, compile, and test C and assembly code without leaving the Dynamic C development environment. Debugging occurs while the application runs on the target. Alternatively, users can compile a program to an image file for later loading. Dynamic C runs on PCs under Windows NT and later—see Rabbit's Technical Note TN257, *Running Dynamic C® With Windows Vista®*, for additional information if you are using a Dynamic C under Windows Vista. Programs can be downloaded at baud rates of up to 460,800 bps after the program compiles.

Downloaded from Arrow.com.

Dynamic C has a number of standard features.

- Full-feature source and/or assembly-level debugger, no in-circuit emulator required.
- Royalty-free TCP/IP stack with source code and most common protocols.
- Hundreds of functions in source-code libraries and sample programs:
  - Exceptionally fast support for floating-point arithmetic and transcendental functions.
  - RS-232 and RS-485 serial communication.
  - Analog and digital I/O drivers.
  - I^2C, SPI, GPS, file system.
  - LCD display and keypad drivers.
- Powerful language extensions for cooperative or preemptive multitasking
- Loader utility program to load binary images into Rabbit targets in the absence of Dynamic C.
- Provision for customers to create their own source code libraries and augment on-line help by creating "function description" block comments using a special format for library functions.
- Standard debugging features:
  - Breakpoints—Set breakpoints that can disable interrupts.
  - Single-stepping—Step into or over functions at a source or machine code level, µC/OS-II aware.
  - Code disassembly—The disassembly window displays addresses, opcodes, mnemonics, and machine cycle times. Switch between debugging at machine-code level and source-code level by simply opening or closing the disassembly window.
  - Watch expressions—Watch expressions are compiled when defined, so complex expressions including function calls may be placed into watch expressions. Watch expressions can be updated with or without stopping program execution.
  - Register window—All processor registers and flags are displayed. The contents of general registers may be modified in the window by the user.
  - Stack window—shows the contents of the top of the stack.
  - Hex memory dump—displays the contents of memory at any address.
  - **STDIO** window—**`printf`** outputs to this window and keyboard input on the host PC can be detected for debugging purposes. **`printf`** output may also be sent to a serial port or file.

Downloaded from Arrow.com.

5.2 Dynamic C Function Calls

5.2.1 Digital I/O

The RCM5600W/RCM6600W was designed to interface with other systems, and so there are no drivers written specifically for the Rabbit 5000 I/O. The general Dynamic C read and write functions allow you to customize the parallel I/O to meet your specific needs. For example, use

```
WrPortI(PEDDR, &PEDDRShadow, 0x00);
```

to set all the Port E bits as inputs, or use

```
WrPortI(PEDDR, &PEDDRShadow, 0xFF);
```

to set all the Port E bits as outputs.

When using the external I/O bus on the Rabbit 5000 or 6000 chip, add the line

```
#define PORTA_AUX_IO    // required to enable external I/O bus
```

to the beginning of any programs using the auxiliary I/O bus.

The sample programs in the Dynamic C **SAMPLES/RCM5600W** or **SAMPLES/RCM6600W** folder provide further examples.

5.2.2 Serial Communication Drivers

Library files included with Dynamic C provide a full range of serial communications support. The **RS232.LIB** library provides a set of circular-buffer-based serial functions. RS232.LIB provides blocking functions, which do not return until they are finished transmitting or receiving, and nonblocking functions, which must be called repeatedly until they are finished, allowing other functions to be performed between calls. For more information, see the ***Dynamic C Function Reference Manual*** and Rabbit Semiconductor's Technical Note TN213, ***Rabbit Serial Port Software***, both included with the online documentation.

Downloaded from Arrow.com.

5.2.3 Serial Flash Memory Use

The RCM5600W/RCM6600W module has a serial flash memory that contains the user block and stores the application program. Two function calls are provided to work with the serial boot flash. These function calls are in the Dynamic C **LIB\Rabbit4000\BIOSLIB\BOOTDEV_SFLASH.LIB** library. The FAT file system function calls from in the Dynamic C **LIB\FileSystem\FAT_CONFIG.LIB** library are not supported.

sbfRead

```
int sbfRead(void *dest, unsigned long offset, unsigned nbytes);
```

DESCRIPTION

Reads up to 64K from anywhere on the serial boot flash. This function call supports both the blocking mode for use with µC/OS-II and a mutex for preemptive multitasking, and the nonblocking mode for cooperative multitasking. See the description for **sbfWriteFlash()** for more information on using a µC/OS-II and a mutex with the serial flash driver.

PARAMETERS

dest	near pointer to the destination buffer
offset	the physical offset into the serial flash
nbytes	the number of bytes to read

RETURN VALUE

0 if successful.

The return values below apply only if **_SPI_USE_UCOS_MUTEX** is not **#defined**:

positive **N** to indicate that the SPI port is being used by device *n*

if more than **_SPI_MAXTIME** milliseconds elapse while waiting for the SPI port to become available, one of the following two runtime errors will occur: **ERR_SPI_MUTEX_ERROR** (when using µC/OS-II) or **-ETIME** (if not using µC/OS-II).

Downloaded from Arrow.com.

sbfWriteFlash

```
int sbfWriteFlash(unsigned long flashDst, void* Src,
   unsigned len);
```

DESCRIPTION

Writes **len** bytes (up to 64K) to physical address **flashDst** from **Src**.

Keep calling **sbfWriteFlash()** until it returns zero or a negative error code. A positive return value indicates that the serial flash SPI port is being used by another device. If you are using µC/OS-II and **_SPI_USE_UCOS_MUTEX** is **#defined**, you may call **sbfWriteFlash()** just once. If more than **_SPI_MAXTIME** milliseconds elapse while waiting for the SPI port to become available, one of the following two runtime errors will occur: **ERR_SPI_MUTEX_ERROR** (when using µC/OS-II) or **-ETIME** (if not using µC/OS-II).

NOTE: This function call is ***not*** power-fail safe. The **writeUserBlock()** function call provides a safer way to store critical data using redundant copies.

PARAMETERS

flashDst	the physical address of the flash destination
Src	near pointer to the source data
len	the number of bytes to write

RETURN VALUE

0 if successful.

-1 if an attempt was made to write to the user/ID block or program area.

The return values below apply only if **_SPI_USE_UCOS_MUTEX** is not **#defined**:

-EBUSY to indicate a busy writing to the serial flash

positive **N** to indicate that the SPI port is being used by device *n*

if more than **_SPI_MAXTIME** milliseconds elapse while waiting for the SPI port to become available, one of the following two runtime errors will occur: **ERR_SPI_MUTEX_ERROR** (when using µC/OS-II) or **-ETIME** (if not using µC/OS-II).

Downloaded from Arrow.com.

5.2.4 User and ID Blocks

The sample program **USERBLOCK_INFO.C** in the Dynamic C **SAMPLES\USERBLOCK** folder can be used to determine the version of the ID block, the size of the ID and user blocks, whether or not the ID/user blocks are mirrored, the total amount of flash memory used by the ID and user blocks, and the area of the user block available for your application.

The **USERBLOCK_CLEAR.C** sample program shows you how to clear and write the contents of the user block that you are using in your application (the calibration constants in the reserved area and the ID block are protected).

NOTE: Since RCM5600W/RCM6600W MiniCore modules have a serial boot flash that shares the serial flash SPI lines with other devices, exercise care when accessing the user block. Pay attention to the instructions associated with the user block function calls in the Dynamic C **LIB\Rabbit4000\BIOSLIB\IDBLOCK.LIB** library.

5.2.5 Wi-Fi Drivers

Complete information on the Wi-Fi libraries and function calls is provided in Chapter 6. Additional information on TCP/IP is provided in the ***Dynamic C TCP/IP User's Manual***.

Downloaded from Arrow.com.

5.2.6 Interface Board Function Calls

The function calls described in this section are for use with the Interface Board features. The source code is in the Dynamic C **LIB\Rabbit4000\RCM5xxx\RCM56xxW.LIB** or **LIB\Rabbit4000\RCM6xxx\RCM66xxW.LIB** library if you need to modify it for your own board design.

The sample programs in the Dynamic C **SAMPLES\RCM5600W** or **SAMPLES\RCM6600W** folder illustrate the use of the function calls.

Other generic functions applicable to all devices based on Rabbit microprocessors are described in the ***Dynamic C Function Reference Manual***.

5.2.6.1 Board Initialization

brdInit

```
void brdInit(void);
```

DESCRIPTION

Call this function at the beginning of your program. This function initializes Parallel Ports A through E for use with the Interface Board. This function call is intended for demonstration purposes only, and can be modified for your applications.

Summary of Initialization

1. I/O port pins are configured for Interface Board operation.
2. Unused configurable I/O are set as outputs.
4. LEDs are off.
5. The slave port is disabled.

Pins PB0, PB1, PC6, PC7, PD4, PD7, and PE4 are configured separately by the BIOS and associated libraries. Parallel port H is configured automatically as part of the 16-bit memory setup, and cannot be used as a general purpose I/O port.

RETURN VALUE

None.

Downloaded from Arrow.com.

5.3 Upgrading Dynamic C

Dynamic C patches that focus on bug fixes are available from time to time. Check the Web site www.digi.com/ for the latest patches, workarounds, and bug fixes.

5.3.1 Add-On Modules

Starting with Dynamic C version 10.40, Dynamic C includes the popular µC/OS-II real-time operating system, point-to-point protocol (PPP), FAT file system, RabbitWeb, and other select libraries. Starting with Dynamic C version 10.56, Dynamic C includes the Rabbit Embedded Security Pack featuring the Secure Sockets Layer (SSL) and a specific Advanced Encryption Standard (AES) library.

In addition to the Web-based technical support included at no extra charge, a one-year telephone-based technical support subscription is also available for purchase.

Visit our Web site at www.digi.com for further information and complete documentation.

Downloaded from Arrow.com.

6. USING THE WI-FI FEATURES

6.1 Introduction to Wi-Fi

Wi-Fi, a popular name for 802.11b/g, refers to the underlying technology for wireless local area networks (WLAN) based on the IEEE 802.11 suite of specifications conforming to standards defined by IEEE. IEEE 802.11b describes the media access and link layer control for a 2.4 GHz implementation, which can communicate at a top bit-rate of 11 Mbits/s. Other standards describe a faster implementation (54 Mbits/s) in the 2.4 GHz band (802.11g). The adoption of 802.11 has been fast because it's easy to use and the performance is comparable to wire-based LANs. Things look pretty much like a wireless LAN.

Wi-Fi (802.11b/g) is the most common and cost-effective implementation currently available. This is the implementation that is used with the RCM5600W/RCM6600W MiniCore modules. A variety of Wi-Fi hardware exists, from wireless access points (WAPs), various Wi-Fi access devices with PCI, PCMCIA, CompactFlash, USB and SD/MMC interfaces, and Wi-Fi devices such as Web-based cameras and print servers.

802.11b/g can operate in one of two modes—in a managed-access mode (BSS), called an infrastructure mode, or an unmanaged mode (IBSS), called the ad-hoc mode. The 802.11 standard describes the details of how devices access each other in either of these modes.

6.1.1 Infrastructure Mode

The infrastructure mode requires an access point to manage devices that want to communicate with each other. An access point is identified with a channel and service set identifier (SSID) that it uses to communicate. Typically, an access point also acts as a gateway to a wired network, either an Ethernet or WAN (DSL/cable modem). Most access points can also act as a DHCP server, and provide IP, DNS, and gateway functions.

When a device wants to join an access point, it will typically scan each channel and look for a desired SSID for the access point. A zero-length string SSID ("") will associate the device with the first SSID that matches its capabilities.

Once the access point is discovered, the device will logically join the access point and announce itself. Once joined, the device can transmit and receive data packets much like an Ethernet-based MAC. Being in a joined state is akin to having link status in a 10/100Base-T network.

802.11b/g interface cards implement all of the 802.11b/g low-level configurations in firmware. In fact, the 802.11b/g default configuration is often sufficient for a device to join an

Downloaded from Arrow.com.

access point automatically, which it can do once enabled. Commands issued to the chip set in the interface allow a host program to override the default configurations and execute functions implemented on the interface cards, for example, scanning for hosts and access points.

6.1.2 Ad-Hoc Mode

In the ad-hoc mode, each device can set a channel number and an SSID to communicate with. If devices are operating on the same channel and SSID, they can talk with each other, much like they would on a wired LAN such as an Ethernet. This works fine for a few devices that are statically configured to talk to each other, and no access point is needed.

6.1.3 Additional Information

802.11 Wireless Networking; published by O'Reilly Media, provides further information about 802.11b wireless networks.

Downloaded from Arrow.com.

6.2 Running Wi-Fi Sample Programs

In order to run the sample programs discussed in this chapter and elsewhere in this manual,

1. Your module must be plugged in to the Interface Board as described in Chapter 2, "Getting Started."
2. Dynamic C must be installed and running on your PC.
3. The USB cable must connect the USB connector on the Interface Board to your PC.
4. Power must be applied to the module through the Interface Board.

Refer to Chapter 2, "Getting Started," if you need further information on these steps.

To run a sample program, open it with the **File** menu, then compile and run it by pressing **F9**.

Each sample program has comments that describe the purpose and function of the program. Follow the instructions at the beginning of the sample program.

Complete information on Dynamic C is provided in the ***Dynamic C User's Manual***.

Downloaded from Arrow.com.

6.2.1 Wi-Fi Setup

Figure 15 shows how your development setup might look once you're ready to proceed.

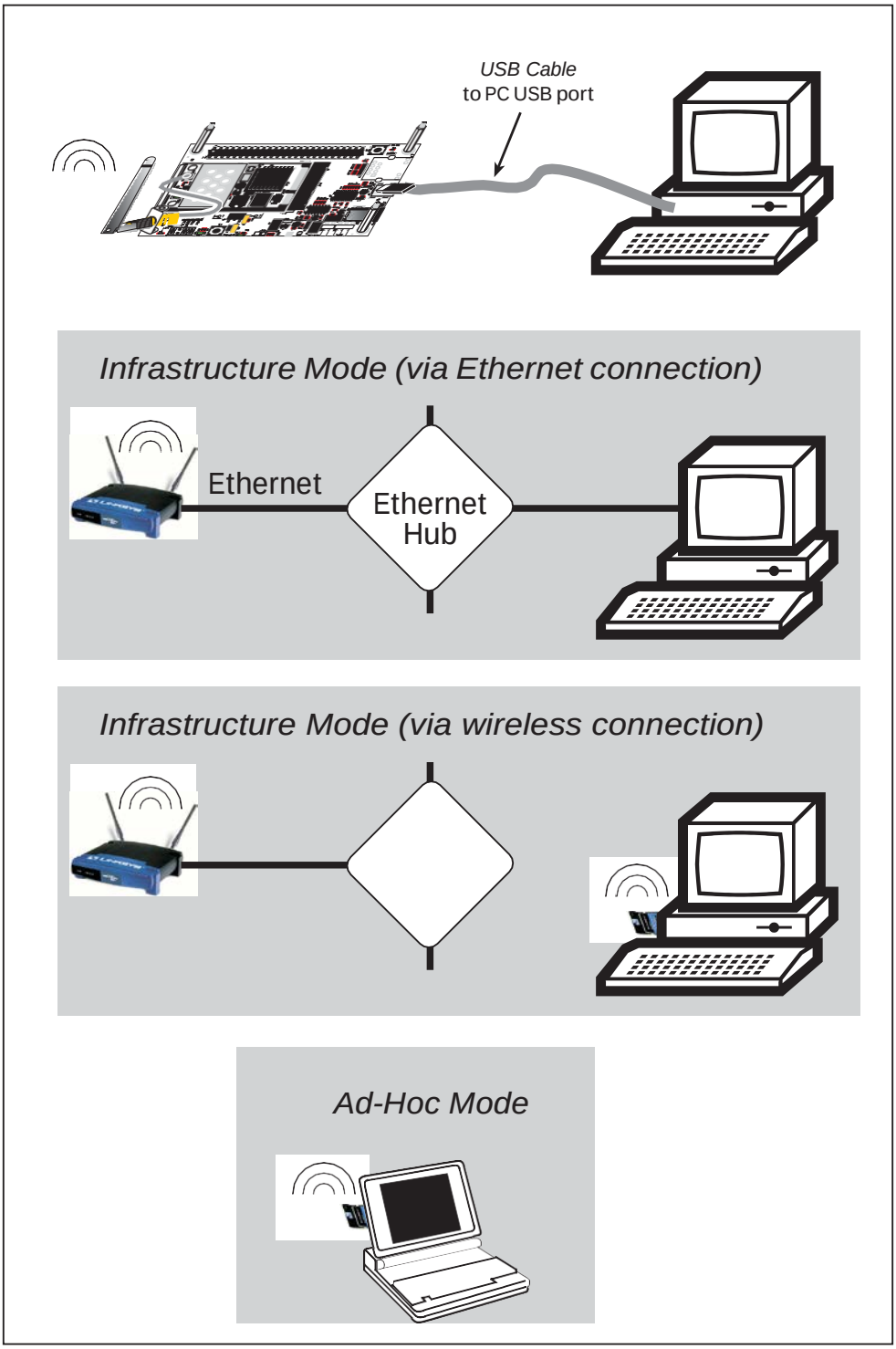

Figure 15. Wi-Fi Host Setup

Downloaded from Arrow.com.

6.2.2 What Else You Will Need

Besides what is supplied with the RCM5600W or RCM6600W Development Kits, you will need a PC with an available USB port to program the MiniCore module. You will need either an access point for an existing Wi-Fi network that you are allowed to access and have a PC or notebook connected to that network (infrastructure mode), or you will need at least a PDA or PC with Wi-Fi to use the ad-hoc mode.

Downloaded from Arrow.com.

6.2.3 Configuration Information

6.2.3.1 Network/Wi-Fi Configuration

Any device placed on an Ethernet-based Internet Protocol (IP) network must have its own IP address. IP addresses are 32-bit numbers that uniquely identify a device. Besides the IP address, we also need a netmask, which is a 32-bit number that tells the TCP/IP stack what part of the IP address identifies the local network the device lives on.

The sample programs configure the RCM5600W/RCM6600W modules with a default **TCPCONFIG** macro from the **LIB\Rabbit4000\TCPIP\TCP_CONFIG.LIB** library. This macro allows specific IP address, netmask, gateway, and Wi-Fi parameters to be set at compile time. Change the network settings to configure your RCM5600W/RCM6600W module with your own Ethernet settings only if that is necessary to run the sample programs; you will likely need to change some of the Wi-Fi settings.

- Network Parameters

  These lines contain the IP address, netmask, nameserver, and gateway parameters.

```
#define _PRIMARY_STATIC_IP "10.10.6.100"
#define _PRIMARY_NETMASK   "255.255.255.0"
#define MY_NAMESERVER      "10.10.6.1"
#define MY_GATEWAY         "10.10.6.1"
```

There are similar macros defined for the various Wi-Fi settings as explained in Section 6.3.1.

The Wi-Fi configurations are contained within **TCPCONFIG 1** (no DHCP) and **TCPCONFIG 5** (with DHCP, used primarily with infrastructure mode). You will need to **#define TCPCONFIG 1** or **#define TCPCONFIG 5** at the beginning of your program.

> **NOTE: TCPCONFIG 0** is not supported for Wi-Fi applications.

There are some other "standard" configurations for **TCPCONFIG**. Their values are documented in the **LIB\Rabbit4000\TCPIP\TCP_CONFIG.LIB** library. More information is available in the ***Dynamic C TCP/IP User's Manual***.

Downloaded from Arrow.com.

6.2.3.2 PC/Laptop/PDA Configuration

This section shows how to configure your PC or notebook to run the sample programs. Here we're mainly interested in the PC or notebook that will be communicating wirelessly, which is not necessarily the PC that is being used to compile and run the sample program on the RCM5600W/RCM6600W module.

This section provides configuration information for the three possible Wi-Fi setups shown in Figure 15. Start by going to the control panel (**Start > Settings > Control Panel**) and click on **Network Connections**. The screen shots shown here are from Windows 2000, and the interface is similar for other versions of Windows.

Check with your administrator if you are unable to change the settings as described here since you may need administrator privileges.

When you are using an access point with your setup in the infrastructure mode, you will also have to set the IP address and netmask (e.g., 10.10.6.99 and 255.255.255.0) for the access point. Check the documentation for the access point for information on how to do this.

Infrastructure Mode (via Ethernet connection)

1. Go to the **Local Area Connection** to select the network interface card used you intend to use (e.g., **TCP/IP Xircom Credit Card Network Adapter**) and click on the "Properties" button. Depending on which version of Windows your PC is running, you may have to select the "Local Area Connection" first, and then click on the "Properties" button to bring up the Ethernet interface dialog. Then "configure" your interface card for an "Auto-Negotiation" or "10Base-T Half-Duplex" connection on the "Advanced" tab.

   NOTE: Your network interface card will likely have a different name.

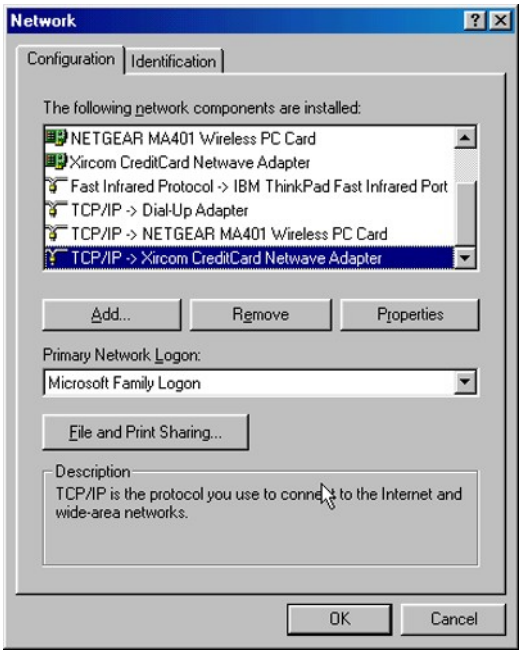

Downloaded from Arrow.com.

2. Now select the **IP Address** tab, and check **Specify an IP Address**, or select TCP/IP and click on "Properties" to fill in the following fields:

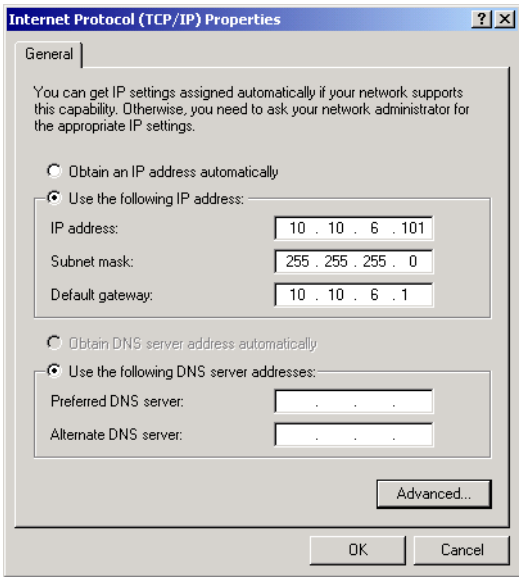

IP Address : 10.10.6.101

Netmask : 255.255.255.0

Default gateway : 10.10.6.1

TIP: If you are using a PC that is already on a network, you will disconnect the PC from that network to run these sample programs. Write down the existing settings before changing them so that you can restore them easily when you are finished with the sample programs.

The IP address and netmask need to be set regardless of whether you will be using the ad-hoc mode or the infrastructure mode.

3. Click **<OK>** or **<Close>** to exit the various dialog boxes.

Infrastructure Mode (via wireless connection)

Set the IP address and netmask for your wireless-enabled PC or notebook as described in Step 2 for **Infrastructure Mode (via Ethernet connection)** by clicking on **Network Connections**, then on **Local Area Connection**. Now click on **Wireless Network Connection** to select the wireless network you will be connecting to. Once a sample program is running, you will be able to select the network from a list of available networks. You will have to set your wireless network name with the access point SSID macro for the infrastructure mode as explained in Section 6.3, "Dynamic C Wi-Fi Configurations."

Ad-Hoc Mode

Set the IP address and netmask for your wireless-enabled PC or notebook as described in Step 2 for **Infrastructure Mode (via Ethernet connection)** by clicking on **Network Connections**, then on **Local Area Connection**. Now click on **Wireless Network Connection** to select the wireless network you will be connecting to. Once a sample program is running, you will be able to select the network from a list of available networks. You will have set your wireless network name with the Wi-Fi channel macros for the ad-hoc mode as explained in Section 6.3, "Dynamic C Wi-Fi Configurations."

Downloaded from Arrow.com.

Once the PC or notebook is set up, we're ready to communicate. You can use Telnet or a Web browser such as Internet Explorer, which come with most Windows installations, to use the network interface, and you can use HyperTerminal to view the serial port when these are called for in some of the later sample programs.

Now we're ready to run the sample programs in the Dynamic C **Samples\WiFi** folder. The sample programs should run as is in most cases.

6.2.4 Wi-Fi Sample Programs

The sample programs in Section 6.2.4.1 show the setup and operation of a wireless network — the **WIFISCAN.C** sample program is ideal to demonstrate that the RCM5600W/RCM6600W has been hooked up correctly and that the Wi-Fi setup is correct so that an access point can be found.

6.2.4.1 Wi-Fi Operation

- **WIFIDHCPORTSTATIC.C**—demonstrates the runtime selection of a static IP configuration or DHCP. The **SAMPLES\TCPIP\DHCP.C** sample program provides further examples of using DHCP with your application.

  Before you compile and run this sample program, check the TCP/IP configuration parameters, the IP address, and the SSID in the macros, which are reproduced below.

  ```
  #define USE_DHCP
  #define TCPCONFIG 1
  #define _PRIMARY_STATIC_IP "10.10.6.100"
  #define IFC_WIFI_SSID "rabbitTest"
  ```

  Modify the values to match your network. You may also need to modify the values for **MY_GATEWAY** if you are not pinging from the local subnet.

  Now press **F9** to compile and run the sample program. When prompted in the Dynamic C **STDIO** window, type 's' for static configuration or 'd' for DHCP.

- **WIFIMULTIPLEAPS.C**—demonstrates changing access points using WEP keys. You will need two access points to run this sample program. The access points should be isolated or on separate networks.

  The sample program associates the MiniCore module with the first access point (**AP_0** defined below) with WEP key **KEY0** (defined below). After associating, the sample program waits for a predefined time period, and then pings the Ethernet address of the access point (**AP_ADDRESS_0**). The sample program then associates with the second access point and pings its Ethernet address (**AP_1**, **KEY1**, **AP_ADDRESS_1**), and then switches back and forth between the two access points.

  When changing access points, first bring the **IF_WIFI0** interface down by calling **ifdown(IF_WIFI0)**. Next, change the SSID and key(s) using **ifconfig()** calls. Finally, bring the **IF_WIFI0** interface back up by calling **ifup(IF_WIFI0)**. Note that the sample program checks for status while waiting for the interface to come up or down.

  Before you compile and run this sample program, check the TCP/IP configuration parameters, the IP address, and the SSID in the macros, which are reproduced below.

Downloaded from Arrow.com.

```
#define TCPCONFIG 1
#define IFC_WIFI_ENCRYPTION IFPARAM_WIFI_ENCR_WEP
```

You do not need to configure the SSID of your network since that is done from the access point names.

Now configure the access to the two access points.

```
// First Access Point
#define AP_0 "test1"
#define AP_0_LEN strlen(AP_0)
#define MY_ADDRESS_0 "10.10.6.250" // use this static IP when connected to AP 0
#define PING_ADDRESS_0 "10.10.6.1" // address on AP 0 to ping
#define KEY_0 "0123456789abcdef0123456789"

// Second Access Point
#define AP_1 "test2"
#define AP_1_LEN strlen(AP_1)
#define MY_ADDRESS_1 "10.10.0.99" // use this static IP when connected to AP 1
#define PING_ADDRESS_1 "10.10.0.50"// address on AP 1 to ping
#define KEY_1 "0123456789abcdef0123456789"

#define IFC_WIFI_SSID AP_0
#define _PRIMARY_STATIC_IP MY_ADDRESS_0
```

Modify the access point names and keys to match your access points and network.

- **WIFIPINGYOU.C**—sends out a series of pings to a MiniCore module on an ad-hoc Wi-Fi network.

  This sample program uses some predefined macros. The first macro specifies the default TCP/IP configuration from the Dynamic C **LIB\Rabbit4000\TCPIP\TCP_CONFIG.LIB** library.

  ```
  #define TCPCONFIG 1
  ```

  Use the next macro unchanged as long as you have only one RCM5600W/RCM6600W MiniCore module. Otherwise use this macro unchanged for the first MiniCore module.

  ```
  #define NODE 1
  ```

  Then change the macro to **#define NODE 2** before you compile and run this sample program on the second module.

  The next macros assign an SSID name and a channel number to the Wi-Fi network.

  ```
  #define IFC_WIFI_SSID  "rab-hoc"
  #define IFC_WIFI_OWNCHANNEL "5"
  ```

  Finally, IP addresses are assigned to the MiniCore modules.

  ```
  #define IPADDR_1  "10.10.8.1"
  #define IPADDR_2  "10.10.8.2"
  ```

  As long as you have only one module, the Dynamic C **STDIO** window will display the pings sent out by the module. You may set up a Wi-Fi enabled laptop with the IP address in **IPADDR_2** to get the pings.

  If you have two modules, they will ping each other, and the Dynamic C **STDIO** window will display the pings.

Downloaded from Arrow.com.

- **WIFISCAN.C**—initializes the RCM5600W/RCM6600W and scans for other Wi-Fi devices that are operating in either the ad-hoc mode or through access points in the infrastructure mode. No network parameter settings are needed since the RCM5600W/RCM6600W does not actually join an 802.11 network. This program outputs the results of the scan to the Dynamic C **STDIO** window.
- **WIFISCANASSOCIATE.C**— demostrates how to scan Wi-Fi channels for SSIDs using **ifconfig IFS_WIFI_SCAN**. This takes a while to complete, so **ifconfig()** calls a callback function when it is done. The callback function is specified using **ifconfig IFS_WIFI_SCAN**.

  Before you run this sample program, configure the Dynamic C **TCP_CONFIG.LIB** library and your **TCPCONFIG** macro.

  1. Use macro definitions in the "Defines" tab in the Dynamic C **Options > Project Options** menu to modify any parameter settings.

     If you are not using DHCP, set the IP parameters to values appropriate to your network.

     ```
     _PRIMARY_STATIC_IP = "10.10.6.100"
     _PRIMARY_NETMASK = "255.255.255.0"
     MY_NAMESERVER = "10.10.6.1"
     MY_GATEWAY = "10.10.6.1"
     ```

     Set the macro **IFC_WIFI_SSID=** to define a C-style string to set the SSID of your access point as, for example,

     ```
     IFC_WIFI_SSID = "My Access Point"
     ```

     or use an empty string, **""**, to associate with the strongest BSS available.

     Alternatively, you may create your own **CUSTOM_CONFIG.LIB** library modeled on the Dynamic C **TCP_CONFIG.LIB** library. Then use a **TCPCONFIG** macro greater than or equal to 100, which will invoke your **CUSTOM_CONFIG.LIB** library to be used. Remember to add the **CUSTOM_CONFIG.LIB** library to **LIB.DIR**.
  2. If you are using DHCP, change the definition of the **TCPCONFIG** macro to 5. The default value of 1 indicates Wi-Fi with a static IP address.

  Now compile and run the sample program. Follow the menu options displayed in the Dynamic C **STDIO** window.

  ```
  Press s to scan available access points
  Press a to scan access points and associate
  Press m to print WIFI MAC status
  ```

  Note that **ifconfig IFS_WIFI_SCAN** function calls do not return data directly since the scan takes a fair amount of time. Instead, callback functions are used. The callback function is passed to **ifconfig()** as the only parameter to **IFS_WIFI_SCAN**.

  ```
  ifconfig(IF_WIFI0, IFS_WIFI_SCAN, scan_callback, IFS_END);
  ```


Downloaded from Arrow.com.

The data passed to the callback function are ephemeral since another scan may occur. Thus, the data need to be used (or copied) during the callback function.

While waiting for user input, it is important to keep the network alive by calling **tcp_tick(NULL)** regularly.

6.2.5 RCM5600W/RCM6600W Sample Programs

The following sample programs are in the Dynamic C **SAMPLES\RCM5600W\TCPIP** or **SAMPLES\RCM6600W\TCPIP** folder. The Interface Board must be set up as described in Section 3.2.

- **PINGLED.C**—This program demonstrates ICMP by pinging a remote host. It will produce a long flash of LED DS1 on the Interface Board when a ping is sent, and a short flash when a ping is received.

  Before you compile and run this sample program, change **PING_WHO** and **IFC_WIFI_SSID** to the host and SSID you want to ping. You may modify **PING_DELAY** to change the amount of time in milliseconds between the outgoing pings.

  Uncomment the **VERBOSE** define to see the incoming ping replies.

- **PINGLED_WPA_PSK.C**—This program demonstrates the use of WPA PSK (Wi-Fi Protected Access with Pre-Shared Key). WPA is a more secure replacement for WEP. The implementation in the sample program supports use of the TKIP (Temporal Key Integrity Protocol) cypher suite.

  The sample program uses macros to configure the access point for WPA PSK, specify the TKIP cypher suite, assign the access point SSID, and set the passphrase.

```
#define WIFI_USE_WPA  // Bring in WPA support
#define IFC_WIFI_ENCRYPTION IFPARAM_WIFI_ENCR_TKIP // Define cypher suite

#define IFC_WIFI_SSID "rabbitTest"
```

  The next macro specifies a suitable pre-shared key to use instead of the passphrase. The key may be entered either as 64 hexadecimal digits or as an ASCII string of up to 63 characters. Authentication should be set to "open system," which basically means that knowing the key is sufficient to allow access.

```
#define IFC_WIFI_WPA_PSK_HEXSTR \
   "1010101010101010101010101010101010101010101010101010101010101010"
```

  TIP: There is a good chance of typos since the key is long. First, enter the key in this sample program macro, then copy and paste it to your access point. This ensures that both the RCM5600W/RCM6600W and the access point have the same key.

  TIP: For an initial test, it may be easier to use the 64 hex digit form of the key rather than the ASCII passphrase. A passphrase requires considerable computation effort, which delays the startup of the sample program by up to 30 seconds (10 seconds on the RCM6600W). Some access points and devices do not allow direct configuration of the hexadecimal key, so for maximum compatibility it is recommended to use the passphrase regardless of the additional computation burden.

Downloaded from Arrow.com.

Change **PING_WHO** and **IFC_WIFI_SSID** to the host and SSID you want to ping. You may modify **PING_DELAY** to change the amount of time in milliseconds between the outgoing pings.

Uncomment the **VERBOSE** define to see the incoming ping replies.

Once you have compiled the sample program and it is running, LED DS1 will go on with a brief toggle off when a ping is sent. LED DS1 will go off for a longer duration when a ping is received. LED DS1 is controlled by PD0.

- **PINGLED_WPA2_CCMP.C**—This sample program demonstrates the use of WPA2 PSK (Wi-Fi Protected Access with Pre-Shared Key).). WPA is a more secure replacement for WEP. The implementation in the sample program uses the Advanced Encryption Standard (AES) based algorithm, also known as the CCMP (Counter Mode with Cipher Block Chaining Message Authentication Code Protocol) cypher suite.

  Apart from the configuration of **WPA2_CCMP** at the top of the sample program, the rest of the code is identical to the case without WPA2 PSK. Indeed, most of the TCP/IP sample programs should work with WPA2 CCMP simply by using the same configuration settings.

  Configure your access point for WPA2 PSK before you run this sample program. Specify the CCMP cypher suite, and enter a suitable pre-shared key. The key may be entered either as 64 hexadecimal digits or as an ASCII string of up to 63 characters. Authentication should be set to “open system,” which basically means that knowing the key is sufficient to allow access.

  Now change **PING_WHO** and **IFC_WIFI_SSID** to the host and SSID you want to ping. You may modify **PING_DELAY** to change the amount of time in milliseconds between the outgoing pings.

  Uncomment the **VERBOSE** define to see the incoming ping replies.

  Once you have compiled the sample program and it is running, LED DS1 will go on with a brief toggle off when a ping is sent. LED DS1 will go off for a longer duration when a ping is received. LED DS1 is controlled by PD0.

Downloaded from Arrow.com.

- **PINGLED_STATS.C**—This program is similar to **PINGLED.C**, but it also displays receiver/transmitter statistics in the Dynamic C **STDIO** window.

  Before you compile and run this sample program, change **PING_WHO** and **IFC_WIFI_SSID** to the host and SSID you want to ping. You may modify **PING_DELAY** to change the amount of time in milliseconds between the outgoing pings.

  Modify the value in the **MOVING_AVERAGE** macro to change the moving average filtering of the statistics. Also review the **GATHER_INTERVAL** and **GRAPHICAL** macros, which affect the number of samples to gather and create a bar graph display instead of a numeric display.

  Uncomment the **VERBOSE** define to see the incoming ping replies.

  Once you compile and run this sample program, LED DS1 on the Interface Board will go on with a brief toggle off when a ping is sent, and the LED will go off for a longer duration when a ping is received.

- **SMTP.C**—This program demonstrates using the SMTP library to send an e-mail when the S1 switch on the Interface Board is pressed. LED DS1 on the Interface Board will light up when e-mail is being sent. LED DS1 is controlled by PD0.

Downloaded from Arrow.com.

The Digital I/O accessory board may also be used to run the **BROWSELED.C**, **PINGLED.C**, and **PINGLED_STATS.C** sample programs. This accessory board is included only with the Deluxe Development Kit.

To install the Digital I/O accessory board, insert the strip of header pins included with the accessory board into the socket at J12 on the bottom side of the Digital I/O accessory board. Then line up the Digital I/O accessory board with the Interface Board standoffs/connectors and install the Digital I/O accessory board pins into socket J2 on the Interface Board. Secure the Digital I/O accessory board with the long plastic standoffs/connectors from above as shown in Figure 16—note that one plastic standoff/connector needs to be inserted "upside down" to secure the Digital I/O accessory board to the antenna bracket.

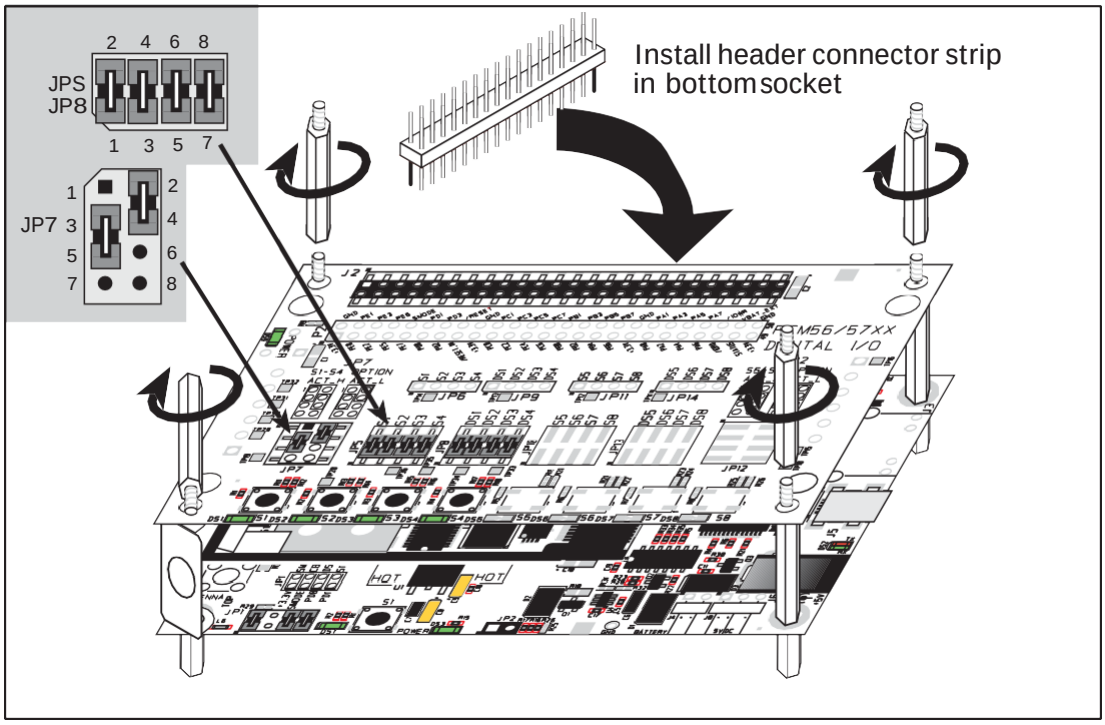

Figure 16. Install Digital I/O Accessory Board

Pins 1–2, 3–4, 5–6, and 7–8 on headers JP5 and JP8 on the Digital I/O accessory board must be jumpered. Pins 2–4 and 3–5 on header JP7 on the Digital I/O accessory board must also be jumpered.

Downloaded from Arrow.com.

- **BROWSELED.C**—This program demonstrates a basic controller running a Web page. Four "device LEDs" are created along with four buttons to toggle them. Users can use their Web browser to change the status of the lights. The DS1, DS2, DS3, and DS4 LEDs on the Digital I/O accessory board will match those on the Web page. As long as you have not modified the **TCPCONFIG 1** macro in the sample program, enter the following server address in your Web browser to bring up the Web page served by the sample program. Remember to configure the access point to match the default settings of the **TCPCONFIG 1** macro.

  http://10.10.6.100.

  Otherwise use the TCP/IP settings you entered in the in the "Defines" tab in the Dynamic C **Options > Project Options** menu.

  Once you compile and run this sample program, you can use the buttons in the Web browser to toggle the LEDs on the Digital I/O accessory board on/off.

- **PINGLED.C**—This program demonstrates ICMP by pinging a remote host. It will flash LED DS2 on the Digital I/O accessory board when a ping is sent and it will flash LED DS3 when a ping is received.

  Before you compile and run this sample program, change **PING_WHO** and **IFC_WIFI_SSID** to the host and SSID you want to ping. You may modify **PING_DELAY** to change the amount of time in milliseconds between the outgoing pings.

  Uncomment the **VERBOSE** define to see the incoming ping replies.

- **PINGLED_STATS.C**—This program is similar to **PINGLED.C**, but it also displays receiver/transmitter statistics in the Dynamic C **STDIO** window.

  Before you compile and run this sample program, change **PING_WHO** and **IFC_WIFI_SSID** to the host and SSID you want to ping. You may modify **PING_DELAY** to change the amount of time in milliseconds between the outgoing pings.

  Modify the value in the **MOVING_AVERAGE** macro to change the moving average filtering of the statistics. Also review the **GATHER_INTERVAL** and **GRAPHICAL** macros, which affect the number of samples to gather and create a bar graph display instead of a numeric display.

  Uncomment the **VERBOSE** define to see the incoming ping replies.

  Once you compile and run this sample program, LED DS2 on the Digital I/O accessory board will flash when a ping is sent, and LED DS3 will flash when a ping is received.

Downloaded from Arrow.com.

The Serial Communication accessory board needs to be installed to run the **SERIAL_TO_WIFI.C** sample program. This accessory board is included only with the Deluxe Development Kit.

To install the Serial Communication accessory board, insert the strip of header pins included with the accessory board into the socket at J12 on the bottom side of the Serial Communication accessory board. Then line up the Serial Communication accessory board with the Interface Board or Digital I/O accessory board standoffs/connectors and install the Serial Communication accessory board pins into socket J2 on the Interface Board or the Digital I/O accessory board. Secure the Serial Communication accessory board with the long plastic standoffs/connectors from above as shown in Figure 17—note that one plastic standoff/connector needs to be inserted "upside down" to secure the Serial Communication accessory board above the antenna bracket.

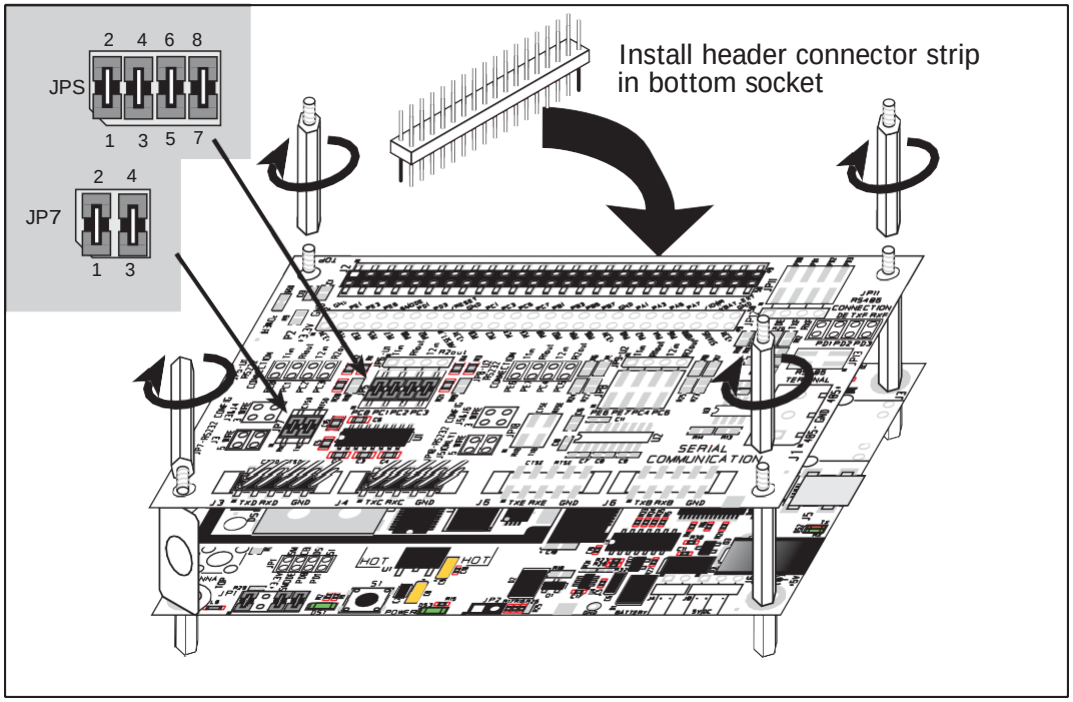

Figure 17. Install Serial Communication Accessory Board

Pins 1–2, 3–4, 5–6, and 7–8 on header JP5 on the Serial Communication accessory board must be jumpered. Pins 1–2 and 3–4 on header JP7 on the Serial Communication accessory board must also be jumpered.

- **SERIAL_TO_WIFI.C**—This program demonstrates using TCP over Wi-Fi, which is handled automatically by the libraries. This sample program uses the RabbitWeb HTTP enhancements to configure a simple serial to Wi-Fi converter.

  This sample program only supports listening TCP sockets, which means that serial to Wi-Fi devices can only be started by another device initiating the network connection to the Rabbit.

Downloaded from Arrow.com.

Each serial port can be associated with a specific TCP port. The Rabbit will listen on each of these TCP ports for a connection, which will then be associated with a specific serial port. Data will then be shuttled between the serial and Wi-Fi connections.

Before you compile and run this sample program, define the **_PRIMARY_STATIC_IP** and **IFC_WIFI_SSID** in the sample program to match your network settings.

Now compile and run this program.

As long as you have not modified the **TCPCONFIG 1** macro in the sample program, enter the following server address in your Web browser to bring up the Web page served by the sample program. Remember to configure the access point to match the default settings of the **TCPCONFIG 1** macro.

http://10.10.6.100.

Select the serial port settings in the Web browser. You may leave the TCP port and baud rate settings at their defaults, then set 8 data bits, no parity, and 1 stop bit. Click **Submit** to save the changed settings.

Now start a Telnet seession to associate a serial port with a TCP port is with telnet: Open a cmd window via **Run > cmd** and type telnet 10.10.6.100 4567 at the prompt to associate Serial Port C, for example, where 4567 was the TCP port assigned to Serial Port C in the previous setup performed via the Web browser.

Next, open a serial utility such as Tera Term or Hyperterminal configured to match the settings selected via the Web browser. Finally, use the 10-pin to DB9 serial cable included with the Deluxe Devlopment Kit to connect the PC serial port selected in your serial utility to header J4 (Serial Port C) or header J3 (Serial Port D), depending on the TCP port selected for the Telnet session. As you type characters in the Telnet utility window, you will be able to observe them in the serial utility window, and vice versa.

Downloaded from Arrow.com.

6.3 Dynamic C Wi-Fi Configurations

Rabbit has implemented a packet driver for the RCM5600W/RCM6600W that functions much like an Ethernet driver for the Dynamic C implementation of the TCP/IP protocol stack. In addition to functioning like an Ethernet packet driver, this driver implements a function call to access the functions implemented on the 802.11b/g interface, and to mask channels that are not available in the region where the RCM5600W/RCM6600W will be used.

The Wi-Fi interface may be used either at compile time using macro statements or at run time with the **ifconfig()** function call from the Dynamic C **LIB\Rabbit4000\TCPIP\NET.LIB** library.

6.3.1 Configuring TCP/IP at Compile Time

It easy for you to set up the parameter configuration using already-defined **TCPCONFIG** macros from the Dynamic C **LIB\Rabbit4000\TCPIP\TCP_CONFIG.LIB** library at the beginning of your program as in the example below.

```
#define TCPCONFIG 1
```

There are two **TCPCONFIG** macros specifically set up for Wi-Fi applications with the RCM5600W/RCM6600W module. (**TCPCONFIG 0** is not supported for Wi-Fi applications.)

TCPCONFIG 1	No DHCP
TCPCONFIG 5	DHCP enabled

These default IP address, netmask, nameserver, and gateway network parameters are set up for the **TCPCONFIG** macros.

```
#define _PRIMARY_STATIC_IP "10.10.6.100"
#define _PRIMARY_NETMASK   "255.255.255.0"
#define MY_NAMESERVER      "10.10.6.1"
#define MY_GATEWAY         "10.10.6.1"
```

The use of quotation marks in the examples described in this chapter is important since the absence of quotation marks will be flagged with warning messages when encrypted libraries are used.

Wi-Fi Parameters

- Access Point SSID—**IFC_WIFI_SSID**. This is the only mandatory parameter. Define the **IFC_WIFI_SSID** macro to a string for the SSID of the access point in the infrastructure (BSS) mode, or the SSID of the ad-hoc network in the ad-hoc (IBSS) mode.

  The default is shown below.

  ```
  #define IFC_WIFI_SSID "rabbitTest"
  ```

- Mode—**IFC_WIFI_MODE** determines the mode: **IFPARAM_WIFI_INFRASTRUCT** for the infrastructure mode, or **IFPARAM_WIFI_ADHOC** for the ad-hoc mode.

Downloaded from Arrow.com.

The default is shown below.

```
#define IFC_WIFI_MODE IFPARAM_WIFI_INFRASTRUCT
```

- Your Own Channel—**IFC_WIFI_CHANNEL** determines the channel on which to operate.

  The default is shown below.

  ```
  #define IFC_WIFI_CHANNEL 0
  ```

  The default **0** means that any valid channel may be used by the requested SSID. This parameter must be non-zero when creating an ad-hoc network. While it is optional for the infrastructure mode, it is usually best left at the default **0**.

  Note that there are restrictions on which channels may be used in certain countries. These are provided in Table 5 for some countries.

- Region/Country—**IFC_WIFI_REGION** sets the channel range and maximum power limit to match the region selected. Table 5 lists the regions that are supported and their corresponding macros.

  The region selected *must* match the region where the RCM5600W/RCM6600W MiniCore module will be used.

  The default is shown below.

  ```
  #define IFC_WIFI_REGION IFPARAM_WIFI_REGION_AMERICAS
  ```

- Disable/enable encryption—**IFC_WIFI_ENCRYPTION** indicates whether or not encryption is enabled.

  The default (encryption disabled) is shown below.

  ```
  #define IFC_WIFI_ENCRYPTION IFPARAM_WIFI_ENCR_NONE
  ```

  The following encryption options are available.

  - **IFPARAM_WIFI_ENCR_NONE** — no encryption is used.
  - **IFPARAM_WIFI_ENCR_ANY** — any type of encryption is used.
  - **IFPARAM_WIFI_ENCR_WEP** — use WEP encryption. You will need to define at least one WEP key (see below).
  - **IFPARAM_WIFI_ENCR_TKIP** — use TKIP or WPA encryption. You will need to define a passphrase or a key for TKIP encryption, as well as define the **WIFI_USE_WPA** macro (see below).
  - **IFPARAM_WIFI_ENCR_CCMP** — use CCMP or WPA2 encryption. You will need to define at least one WEP key (see below).

- There are four encryption keys (**0**, **1**, **2**, **3**) associated with the **IFC_WIFI_WEP_KEYNUM** macro (default **0**). One or more of the following additional macros must be defined as well. The default is for the keys to remain undefined.

Downloaded from Arrow.com.

IFC_WIFI_WEP_KEY0_BIN	**IFC_WIFI_WEP_KEY0_HEXSTR**
IFC_WIFI_WEP_KEY1_BIN	**IFC_WIFI_WEP_KEY1_HEXSTR**
IFC_WIFI_WEP_KEY2_BIN	**IFC_WIFI_WEP_KEY2_HEXSTR**
IFC_WIFI_WEP_KEY3_BIN	**IFC_WIFI_WEP_KEY3_HEXSTR**

These macros specify the WEP keys to use for WEP encryption. These keys can be either 40-bit or 104-bit (i.e., 5 bytes or 13 bytes). They must be defined as a comma-separated list of byte values.

Note that you do not necessarily need to define all four WEP keys. You may typically just define one key, but make sure it matches the key used on all other devices, and set **IFC_WIFI_WEP_KEYNUM** to point to the correct key.

If both **IFC_WIFI_WEP_KEY#_BIN** and **IFC_WIFI_WEP_KEY#_HEXSTR** are defined for a particular key, the hex version will be used.

- Use WPA encryption.

  The following macro must also be used to compile WPA functionality into the Wi-Fi driver. This is necessary to enable TKIP encryption.

  ```
  #define WIFI_USE_WPA
  ```

- Set WPA passphrase—**IFC_WIFI_WPA_PSK_PASSPHRASE** is a string that matches the passphrase on your access point. It may also point to a variable.

  Define an ASCII passphrase here, from 1 to 63 characters long. An example is shown below.

  ```
  #define IFC_WIFI_WPA_PSK_PASSPHRASE "now is the time"
  ```

  If possible, you should use **IFC_WIFI_WPA_PSK_HEXSTR** instead of **IFC_WIFI_WPA_PSK_PASSPHRASE** to set the key.

- Set WPA hexadecimal key—**IFC_WIFI_WPA_PSK_HEXSTR** is a string of hexadecimal digits that matches the 256-bit (32-byte) hexadecimal key used by your access point.

  Specify a 64 hexadecimal digit (256 bits) key here. This key will be used and will override any passphrase set with the **IFC_WIFI_WPA_PSK_PASSPHRASE** macro. The example hex key shown below

  ```
  #define IFC_WIFI_WPA_PSK_HEXSTR \
     "57A12204B7B350C4A86A507A8AF23C0E81D0319F4C4C4AE83CE3299EFE1FCD27"
  ```

  is valid for the SSID **"rabbitTest"** and the passphrase **"now is the time"**.

  Using a passphrase is rather slow. It takes a Rabbit 5000 more than 20 seconds to generate the actual 256-bit key from the passphrase, and it is still about 10 seconds on a Rabbit 6000. If you use a passphrase and **#define WIFI_VERBOSE_PASSPHRASE**, the Wi-Fi library will helpfully print out the hex key corresponding to that passphrase and SSID. In a real application, steps should be taken to save the hexadecimal key in non-volatile memory so that the key does not have to be recomputed from the passphrase at each power-up.

Downloaded from Arrow.com.

- Authentication algorithm—**IFC_WIFI_AUTHENTICATION** can be used to specify the authentication modes used.

  The default shown below allows enables both open-system authentication and shared-key authentication.

  ```
  #define IFPARAM_WIFI_AUTH_ANY
  ```

  The following authentication options are available.

  - **IFPARAM_WIFI_AUTH_OPEN**— only use open authentication.
  - **IFPARAM_WIFI_AUTH_SHAREDKEY** — only use shared-key authentication (useful for WEP only).
  - **IFPARAM_WIFI_WPA_PSK**— use WPA preshared-key authentication (useful for TKIP and CCMP only).

- Fragmentation threshold—**IFC_WIFI_FRAG_THRESHOLD** sets the fragmentation threshold. Frames (or packets) that are larger than this threshold are split into multiple fragments. This can be useful on busy or noisy networks. The value can be between **256** and **2346**.

  The default, **0**, means no fragmentation.

  ```
  #define IFC_WIFI_FRAG_THRESHOLD 0
  ```

- RTS threshold—**IFC_WIFI_RTS_THRESHOLD** sets the RTS threshold, the frame size at which the RTS/CTS mechanism is used. This is sometimes useful on busy or noisy networks. Its range is **1** to **2347**.

  The default, **2347**, means no RTS/CTS.

  ```
  #define IFC_WIFI_RTS_THRESHOLD 2347
  ```

Examples are available within Dynamic C. Select "Function Lookup" from the **Help** menu, or press **<ctrl-H>**. Type "TCPCONFIG" in the Function Search field, and hit **<Enter>**. Scroll down to the section on "Wi-Fi Configuration." The ***Dynamic C TCP/IP User's Manual***.(Volume 1) provides additional information about these macros and Wi-Fi.

It is also possible to redefine any of the above parameters dynamically using the **ifconfig()** function call. Macros for alternative Wi-Fi configurations are provided with the **ifconfig()** function call, and may be used to change the above default macros or configurations.

Downloaded from Arrow.com.

6.3.2 Configuring TCP/IP at Run Time

There is one basic function call used to configure Wi-Fi and other network settings — **ifconfig()**. See the ***Dynamic C TCP/IP User's Manual, Volume 1*** for more information about this function call.

As of Dynamic C 10.60, you can also make use of iDigi. See ***User's Manual: Dynamic C - iDigi Services for Rabbit Developers Guide*** for more information.

6.3.3 Other Key Function Calls

Remember to call **sock_init()** after all the Wi-Fi parameters have been defined. The Wi-Fi interface will be up automatically as long as you configured Dynamic C at compile time with one of the **TCPCONFIG** macros. Otherwise the Wi-Fi interface is neither up nor down, and must be brought up explicitly by calling either **ifup(IF_WIFI0)** or **ifconfig(IF_WIFI0,…)**. You must bring the interface down when you configure Dynamic C at run time before modifying any parameters that require the interface to be down (see Section 6.3.2) by calling **ifdown(IF_WIFI0)**. Then bring the interface back up.

Finally, no radio transmission occurs until you call **tcp_tick(NULL)**.

Instead of executing the above sequence based on **sock_init()**, you could use **sock_init_or_exit(1)** as a debugging tool to transmit packets (ARP, DHCP, association, and authentication) while bringing up the interface and to get the IP address.

Downloaded from Arrow.com.

6.4 Where Do I Go From Here?

NOTE: If you purchased your RCM5600W/RCM6600W through a distributor or through a Rabbit partner, contact the distributor or partner first for technical support.

If there are any problems at this point:

- Use the Dynamic C **Help** menu to get further assistance with Dynamic C.
- Check the Support for Rabbit Products forum at www.digi.com/support/forum/rabbit

File a support request by going to www.digi.com, and selecting Support / Online Support Request.

If the sample programs ran fine, you are now ready to go on.

An Introduction to TCP/IP and the ***Dynamic C TCP/IP User's Manual***.provide background and reference information on TCP/IP, and are available on the CD and on our Web site.

Downloaded from Arrow.com.

APPENDIX A. RCM5600W AND RCM6600W SPECIFICATIONS

Appendix A provides the specifications for the RCM5600W and RCM6600W MiniCore modules.

Downloaded from Arrow.com.

A.1 Electrical and Mechanical Characteristics

Figure A-1 shows the mechanical dimensions for the RCM5600W and RCM5650W.

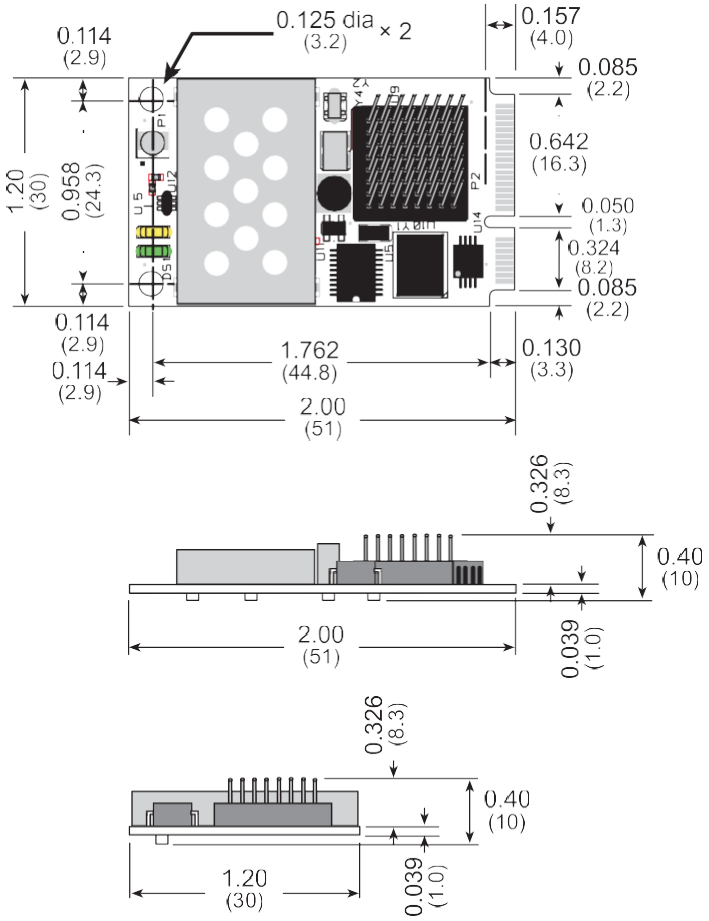

Figure A-1. RCM5600W and RCM5650W Dimensions

Figure A-2 shows the mechanical dimensions for the RCM6600W.

Downloaded from Arrow.com.

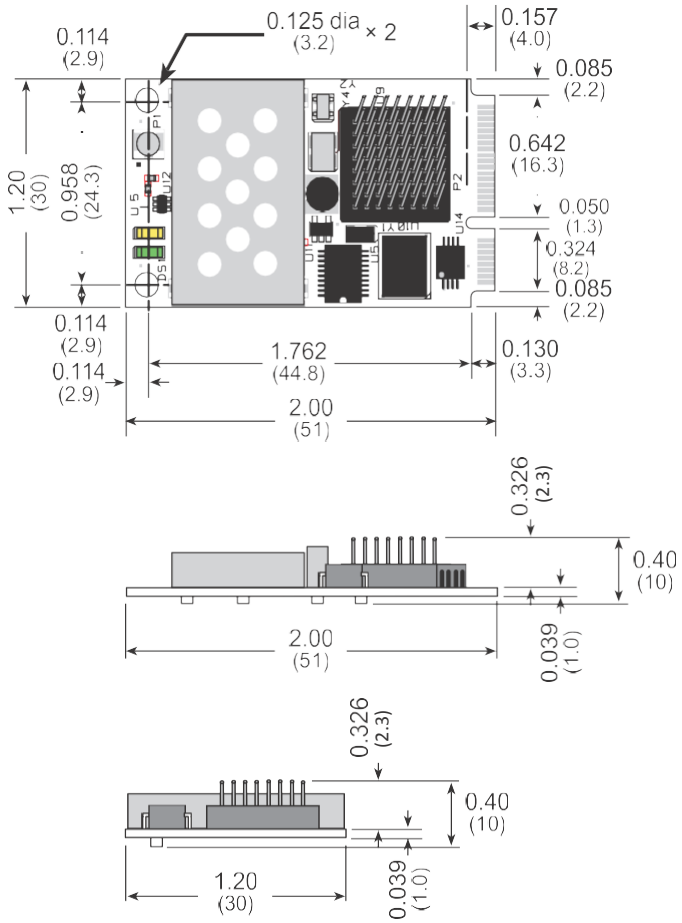

Figure A-2. RCM6600W Dimensions

It is recommended that you allow for an “exclusion zone” of 0.08" (2 mm) around the RCM5600W/RCM6600W top and bottom and 0.04" (1 mm) around the three non-connector edges when the RCM5600W/RCM6600W is incorporated into an assembly that includes other printed circuit boards. This “exclusion zone” that you keep free of other components and boards will allow for sufficient air flow, and will help to minimize any electrical or electromagnetic interference between adjacent boards. Figure shows this “exclusion zone.”

Downloaded from Arrow.com.

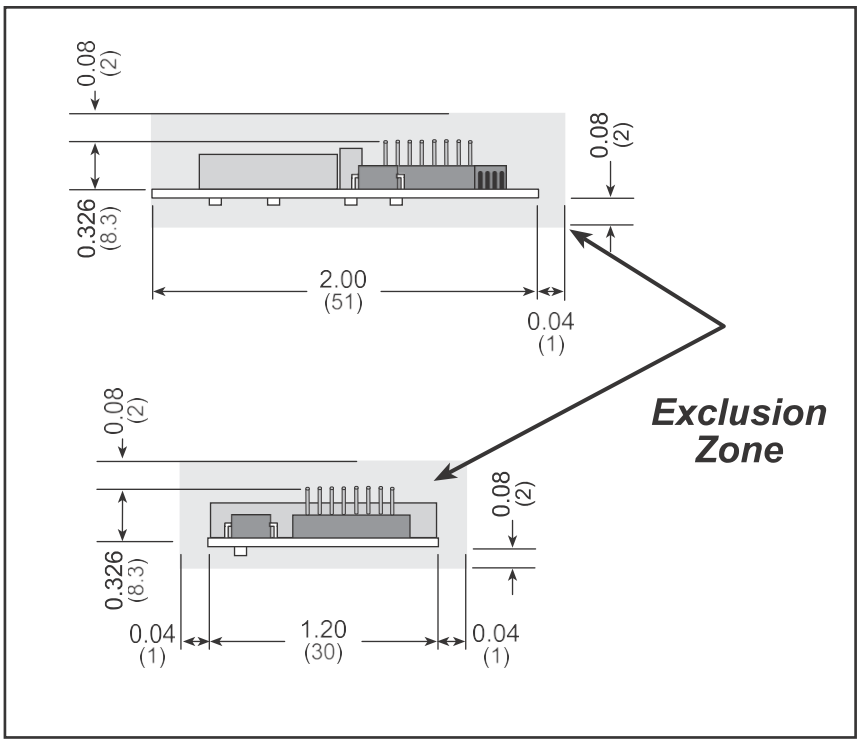

Figure A-3. RCM5600W/ RCM6600W "Exclusion Zone"

Downloaded from Arrow.com.

Table A-1 lists the electrical, mechanical, and environmental specifications for the RCM5600W and RCM5650W.

Table A-1. RCM5600W and RCM5650W Specifications

Parameter	RCM5600W	RCM5650W
Microprocessor	Rabbit® 5000 at 73.73 MHz	
Network peripherals	Wi-Fi (802.11 b/g)	
EMI Reduction	Spectrum spreader for reduced EMI (radiated emissions)	
Serial Flash Memory (program)	1MB	4MB
SRAM	1MB	
Backup Battery	Connection for user-supplied backup battery (to support RTC)	
General-Purpose I/O	Up to 35 parallel digital I/0 lines configurable with four layers of alternate functions	
Additional Inputs	Reset in	
Additional Outputs	Status, reset out	
External I/O Bus	Can be configured for 8 data lines and 8 address lines (shared with parallel I/O lines), plus I/O read/write	
Serial Ports	6 high-speed, CMOS-compatible ports: • all 6 configurable as asynchronous (with IrDA), 4 as clocked serial (SPI), and 2 as SDLC/HDLC • 1 clocked serial port shared with programming port	
Serial Rate	Maximum asynchronous baud rate = CLK/8	
Slave Interface	Slave port allows the module to be used as an intelligent peripheral device slaved to a master processor	
Real-Time Clock	Yes	
Timers	Ten 8-bit timers (6 cascadable from the first), one 10-bit timer with 2 match registers, and one 16-bit timer with 4 outputs and 8 set/reset registers	
Watchdog/Supervisor	Yes	
Pulse-Width Modulators	4 channels synchronized PWM with 10-bit counter or 4 channels variable-phase or synchronized PWM with 16-bit counter	
Input Capture	2-channel input capture can be used to time input signals from various port pins	
Quadrature Decoder	2-channel quadrature decoder accepts inputs from external incremental encoder modules	

Downloaded from Arrow.com.

Table A-1. RCM5600W and RCM5650W Specifications (continued)

Parameter	RCM5600W	RCM5650W
Power	3.15 V DC (min.) – 3.45 V DC (max.) 625 mA @ 3.3 V while transmitting/receiving 85 mA @ 3.3 V while not transmitting/receiving	
Operating Temperature	–30°C to +55°C	
Humidity	5% to 95%, noncondensing	
Connectors	Edge connectors for interface with 52-pin mini PCI Express socket	
Board Size	1.20" × 2.00" × 0.40" (30 mm × 51 mm × 10 mm)	

Table A-2. RCM6600W and RCM6650W Specifications

Parameter	RCM6600W	RCM6650W
Microprocessor	Rabbit® 6000 at 162.5 MHz	
Network peripherals	Wi-Fi (802.11 b/g) and Ethernet (10/100 Mbit)	
EMI Reduction	Spectrum spreader for reduced EMI (radiated emissions) - only for slow clock speeds.	
Serial Flash Memory (program)	1MB	4MB
SRAM	1MB	
Backup Battery	Connection for user-supplied backup battery (to support RTC)	
General-Purpose I/O	Up to 35 parallel digital I/0 lines configurable with four layers of alternate functions, plus FIM (Flexible Interface Module) control.	
Analog Inputs	0, 2 or 4 inputs shared with PE0,1 or PE2,3. 12 bit resolution, 11 bits performance at up to 1 Msample/sec (125 ksample/sec for any one input with no CPU overhead). Input range 100mV to Vcc-100mV typical.	
Additional Inputs	Reset in	
Additional Outputs	Status, reset out	
External I/O Bus	Can be configured for 8 data lines and 8 address lines (shared with parallel I/O lines), plus I/O read/write	
Serial Ports	6 high-speed, CMOS-compatible ports: • all 6 configurable as asynchronous (with IrDA), 4 as clocked serial (SPI), and 2 as SDLC/HDLC • 1 clocked serial port shared with programming port	
Serial Rate	Maximum asynchronous baud rate = CLK/8	

Downloaded from Arrow.com.

Parameter	RCM6600W	RCM6650W
Slave Interface	Slave port allows the module to be used as an intelligent peripheral device slaved to a master processor	
Real-Time Clock	Yes	
Timers	Ten 8-bit timers (6 cascadable from the first), one 10-bit timer with 2 match registers, and one 16-bit timer with 4 outputs and 8 set/reset registers	
Watchdog/Supervisor	Yes	
Pulse-Width Modulators	4 channels synchronized PWM with 10-bit counter or 4 channels variable-phase or synchronized PWM with 16-bit counter	
Input Capture	2-channel input capture can be used to time input signals from various port pins	
Quadrature Decoder	2-channel quadrature decoder accepts inputs from external incremental encoder modules	
Power	3.15 V DC (min.) – 3.45 V DC (max.) 625 mA @ 3.3 V while transmitting/receiving 85 mA @ 3.3 V while not transmitting/receiving	
Operating Temperature	–30°C to +55°C	
Humidity	5% to 95%, noncondensing	
Connectors	Edge connectors for interface with 52-pin mini PCI Express socket	
Board Size	1.20" × 2.00" × 0.40" (30 mm × 51 mm × 10 mm)	

Wi-Fi			
	Region	802.11b	802.11g
Typical Average Antenna Output Power	Americas, Japan	19 dBm	15 dBm
	Other Regions	18 dBm	
Compliance	802.11b/g, 2.4 GHz		

Downloaded from Arrow.com.

A.1.1 mini PCI Express Connector Design Recommendations

The RCM5600W/RCM6600W is mounted on the Interface Board via a mini PCI Express connector and a corresponding locking latch connector. These are offered by manufacturers as a matched set, although in some cases different manufacturer's parts may be interchangeable. Table A-3 lists the recommended parts for the mini PCI Express connector and the locking latch connector used for the Interface Board.

Table A-3. Interface Board Connector-Related Parts

Connector Part	Manufacturer Part Number	Rabbit Store Part Number
mini PCI Express Connector	Pinrex 984-63-052202	498-0090
Latch Connector	FOXCONN AS0B226S68K-7F	498-0091

Figure A-4 shows a footprint for the SMT connectors in Table A-3.

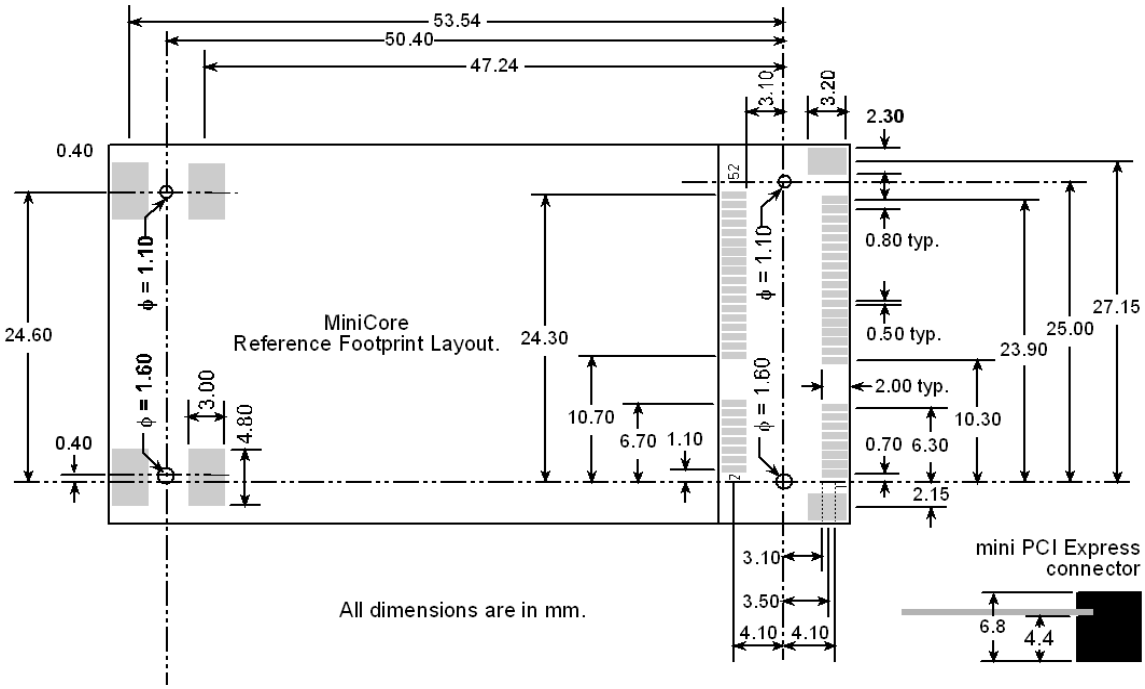

Figure A-4. PCB SMT Footprint for Pinrex and FOXCONN Connectors (25.4 mm = 1")

Downloaded from Arrow.com.

Other manufacturers such as Molex offer similar connectors and latches, but these can have different mechanical structures and PCB footprints to what we use on the Interface Board. Table A-4 lists a pair of matched Molex parts that might be used.

Table A-4. Molex Connector-Related Parts

Connector Part	Molex Part Number
mini PCI Express Connector	67910-0002
Latch Connector	48099-4000

Follow the PCB design and layout recommendations and considerations provided by the manufacturer for the connector and latch that you select.

The RCM5600W/RCM6600W may also be mounted with standoffs instead of a latch connector — this is the type of mounting recommended for the module to maximize vibration resistance. The height of the standoffs will depend on the mini PCI Express connector selected — Table A-3 provides some examples. Figure A-5 shows a footprint for this mounting option based on the mini PCI Express connector in Table A-3.

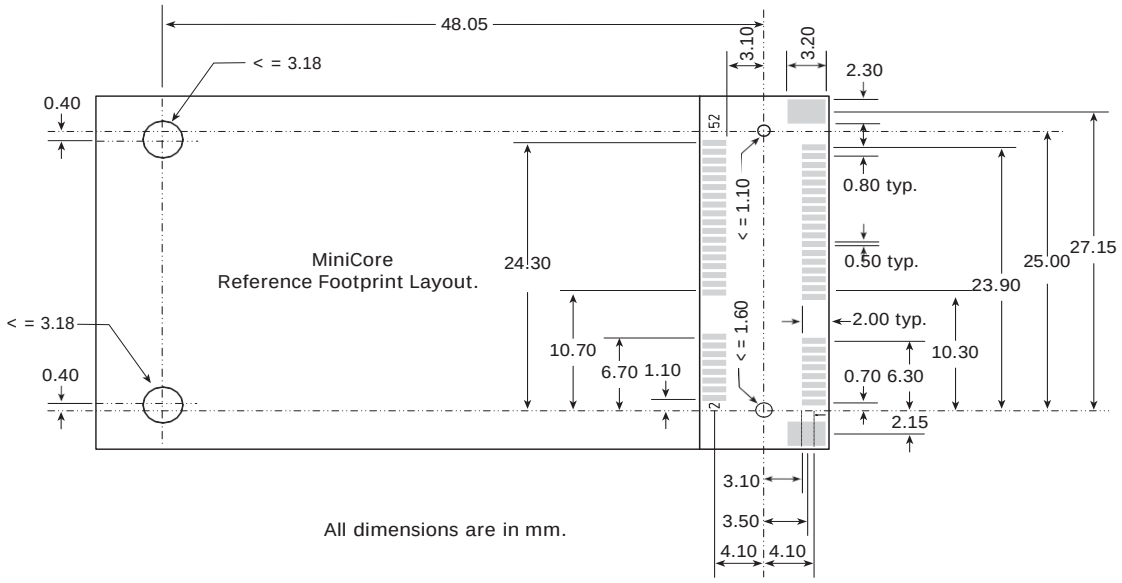

Figure A-5. PCB Standoff Footprint with mini PCI Express Connectors

Table A-5. Standoff Heights Based on mini PCI Express Connector

mini PCI Express Connector Height	Standoff Height	Remarks
6.8 mm	4.4 mm	Used with Interface Board
9.2 mm	6.8 mm	Used with Accessory Kit

Downloaded from Arrow.com.

The SMT connectors are ideal in a development environment, where the latch connector facilitates swapping RCM5600W/RCM6600W MiniCore modules as development progresses. The absence of holes also maximizes trace routing flexibility on the printed circuit board. The standoff option offers better vibration resistance once you are ready to deploy your application based on the RCM5600W/RCM6600W.

The Rabbit store sells an accessory kit (Part No. 101-1306) with the standoffs, screws, and mini PCI Express connector needed to mount an RCM5600W/RCM6600W using the footprint. The heights of the mini PCI Express connector and the associated standoffs in the accessory kit are shown in millimeters at right

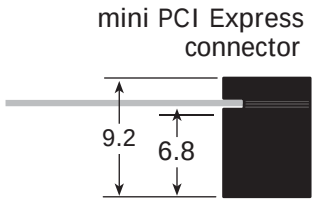

A.2 Rabbit 5000 Microprocessor Characteristics

If using the RCM5600W, the ***Rabbit 5000 Microprocessor User's Manual***, which is included with the online documentation, provides complete specifications and timing diagrams for the Rabbit 5000 microprocessor.

Rabbit's Technical Note TN227, ***Interfacing External I/O with Rabbit Microprocessor Designs***, which is also included with the online documentation, contains suggestions for interfacing I/O devices to the Rabbit 5000 microprocessors.

A.3 Rabbit 6000 Microprocessor Characteristics

If using the RCM6600W, the ***Rabbit 6000 Microprocessor User's Manual***, which is included with the online documentation, provides complete specifications and timing diagrams for the Rabbit 6000 microprocessor.

The Rabbit 6000 microprocessor has the following basic differences compared with the Rabbit 5000:

- Runs at a higher clock speed (up to 162.5MHz).
- Includes some new instructions for more efficient cryptography and arithmetic.
- Contains an internal 1MB fast RAM which does not require any wait states.
- Has 16 (instead of 8) DMA channels, which can access the internal RAM without impacting the main CPU.
- Can run Ethernet and Wi-Fi communications simultaneously.
- Incorporates two Flexible Interface Modules (FIMs) which are independently running satellite processors, with a PIC-like instruction set. Each FIM can be selected to control external I/O lines; typically, an entire 8-bit parallel port may be assigned to FIM control. The FIMs run at 2 times the main CPU clock rate, i.e. up to 325MHz, and thus may be programmed to implement simple peripheral functions that do not require main CPU intervention.

Downloaded from Arrow.com.

APPENDIX B. INTERFACE BOARD

Appendix B describes the features and accessories of the Interface Board, and explains the use of the Interface Board to demonstrate the RCM5600W/ RCM6600W. The Interface Board has power-supply connections and a USB interface to program the RCM5600W/ RCM6600W.

Downloaded from Arrow.com.

B.1 Introduction

The Interface Board included in the Development Kit makes it easy to connect an RCM5600W/ RCM6600W module to a power supply and a PC workstation for development.

The Interface Board is shown below in Figure B-1, with its main features identified.

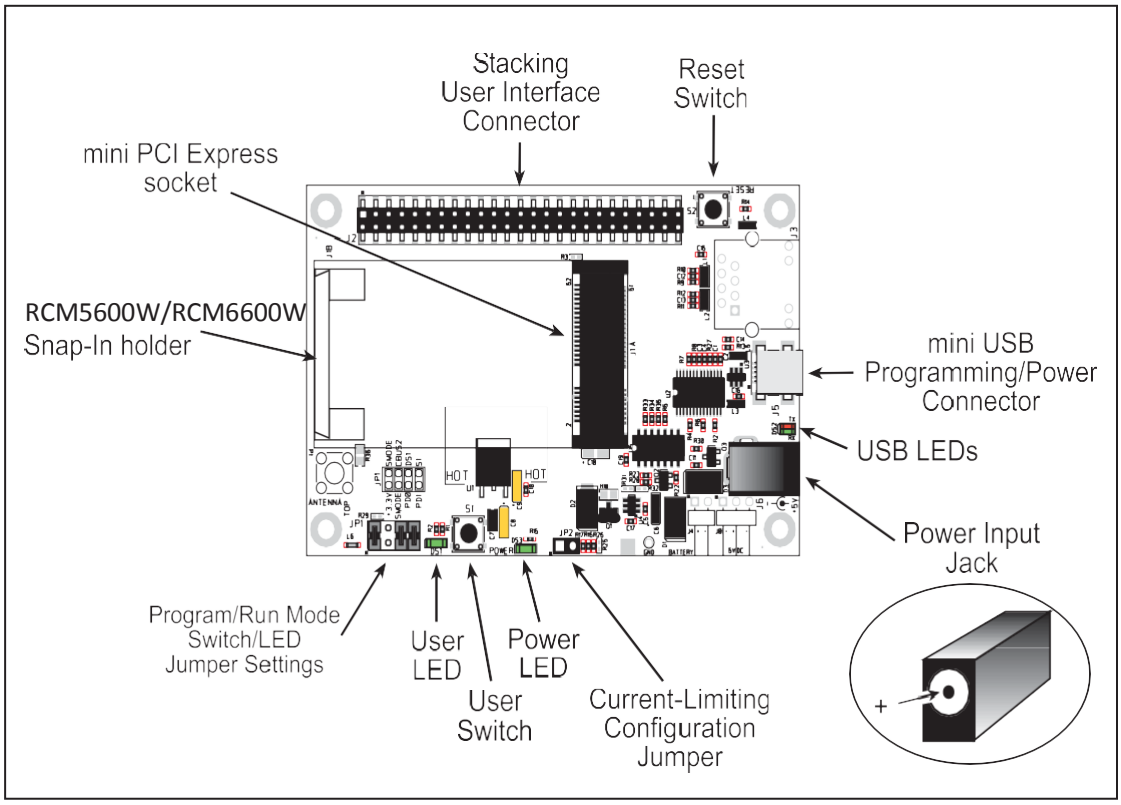

Figure B-1. Interface Board

Downloaded from Arrow.com.

B.1.1 Interface Board Features

- **Power Connection**—Power is supplied to the Interface Board either from the PC via the USB connection or through a power supply jack, J6. A chip at U4 disconnects the USB power supply from the rest of the Interface Board when power is supplied through jack J6.

  Users providing their own power supply should ensure that it delivers +5 V DC at 10 W.

- **Regulated Power Supply**—The raw DC voltage is routed to a 3.3 V linear regulator. The regulator provides stable power to the RCM5600W/ RCM6600W module and other boards connected to it.

- **Power LED**—The power LED lights whenever power is connected to the Interface Board.

- **Reset Switch**—A momentary-contact, normally open switch is connected directly to the RCM5600W/ RCM6600W's **/RESET_IN** pin. Pressing the switch forces a hardware reset of the system.

- **mini USB Connector**—A USB cable is used to connect the RCM5600W/ RCM6600W via the Interface Board to your PC to enable you to program your RCM5600W/ RCM6600W module.

- **mini PCI Express socket**—The Interface Board provides a 52-pin mini PCI Express socket to enable you to install your RCM5600W/ RCM6600W module. There is a snap-in holder to hold the opposite end of the RCM5600W/ RCM6600W module firmly in place.

- **I/O Switch and LED**—One momentary-contact, normally open switch is connected to PD1 on the RCM5600W/ RCM6600W module and may be read as an input by sample applications.

  One LED is connected to PD0 on the RCM5600W/ RCM6600W module, and may be driven as an output indicator by sample applications.

Downloaded from Arrow.com.

B.2 Mechanical Dimensions and Layout

Figure B-2 shows the mechanical dimensions and layout for the Interface Board.

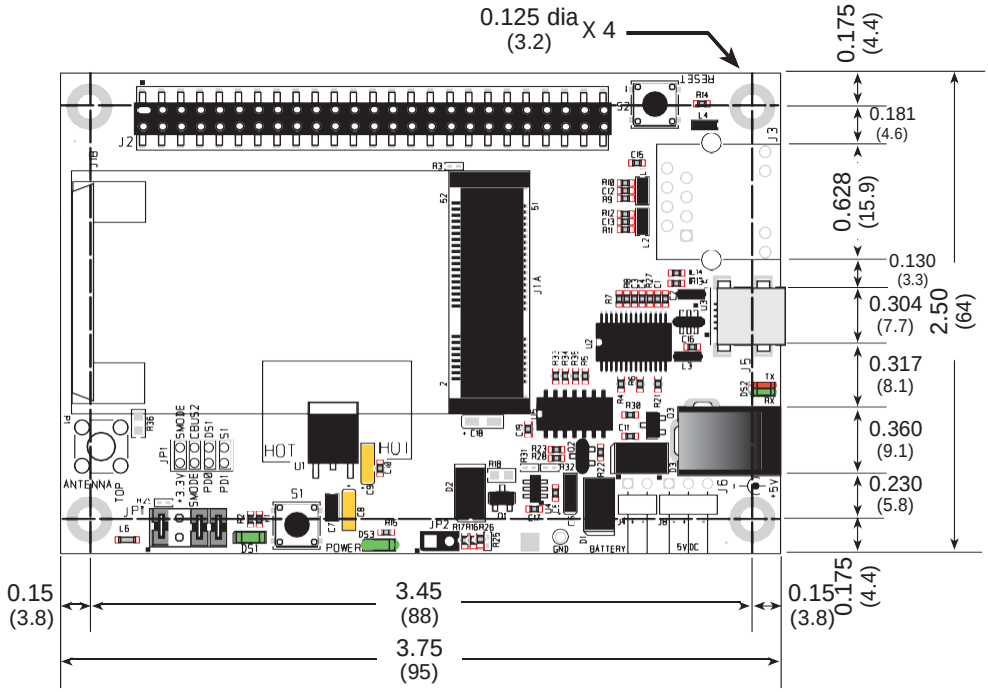

Figure B-2. Interface Board Dimensions

Table B-1 lists the electrical, mechanical, and environmental specifications for the Interface Board.

Table B-1. Interface Board Specifications

Parameter	Specification
Board Size	2.50" × 3.75" × 0.60" (64 mm × 95 mm × 15 mm)
Operating Temperature	–40°C to +85°C
Humidity	5% to 95%, noncondensing
Input Voltage	+5 V DC
Output Voltage	+3.3 V DC
Maximum Current Draw (including user-added circuits)	nominal 750 mA max. for USB supply, 1.5 A for separate power supply
Other Connectors	One 2 × 25 IDC header sockets, 0.1" pitch, One 52-pin mini PCI Express socket to accept RCM5600W One mini USB connector One 2 mm power supply jack
Standoffs/Spacers	4

Downloaded from Arrow.com.

B.2.1 Headers

The Interface Board has a header socket at J2 for physical connection to other boards. J2 is a 2 × 25 SMT header socket with a 0.1" pin spacing. Figure B-3 shows the layout of another board to be plugged into the Interface Board — this footprint is identical for the Interface Board and the two accessory boards. The values are relative to the mounting hole.

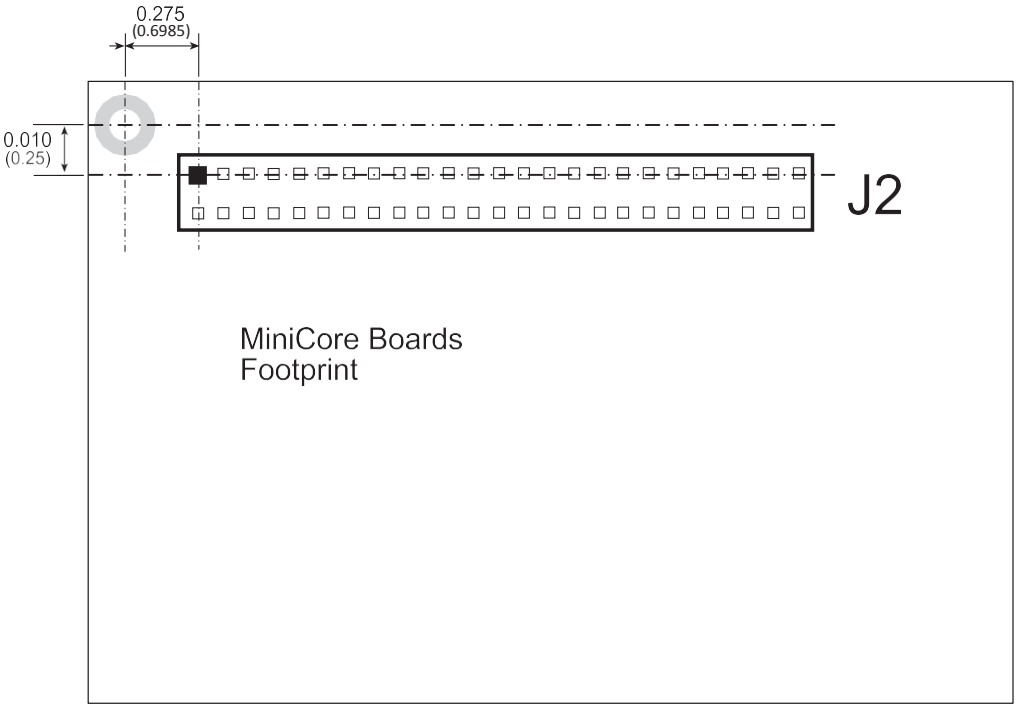

Figure B-3. Interface Board Footprint

Downloaded from Arrow.com.

B.3 Power Supply

The RCM5600W/ RCM6600W requires a regulated 3.15 V – 3.45 V DC power source to operate. Depending on the amount of current required by the application, different regulators can be used to supply this voltage.

The Interface Board has an onboard +3.3 V linear regulator. The Interface Board is protected against reverse polarity by a Shottky diode at D3 as shown in Figure B-4.

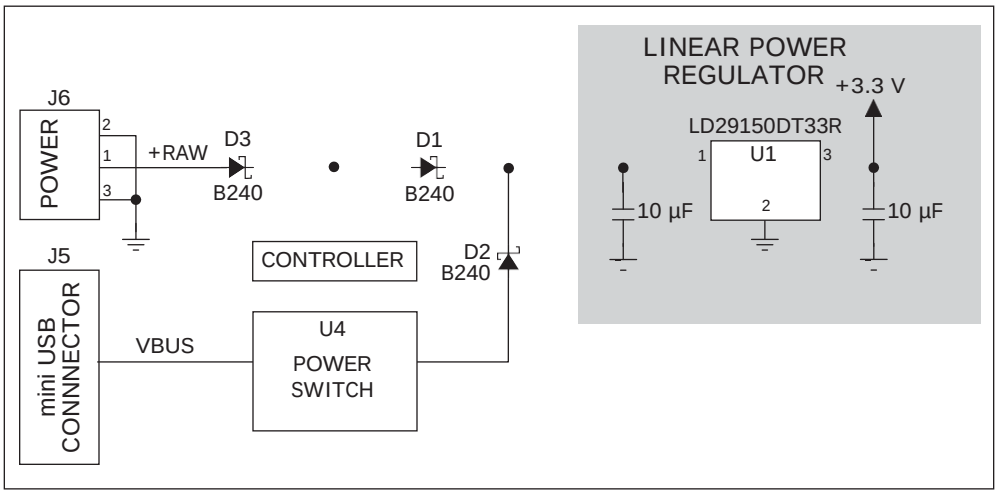

Figure B-4. Interface Board Power Supply

Power may be supplied to the Interface Board either via the mini USB connector at J5 or through the power supply jack J6. When a separate power supply is used, the chip at U4 disables power from the mini USB connector, which continues to supply power only to the USB interface chip. Diodes at D1 and D2 prevent power from going back to the other power supply that is not supplying power. A separate power supply is required whenever the Interface Board is not connected to the PC.

A jumper on header JP2 controls the current limiting applied to the power drawn via the mini USB connector — the current is nominally limited to 700 mA when a jumper is installed (default), and is nominally limited to 500 mA when no jumper is installed.

Downloaded from Arrow.com.

B.4 Using the Interface Board

The Interface Board is also a demonstration board. It can be used to demonstrate the functionality of the RCM5600W/ RCM6600W right out of the box without any modifications to either board.

The Interface Board comes with the basic components necessary to demonstrate the operation of the RCM5600W/ RCM6600W. One LEDs (DS1) is connected to PD0, and one switch (S1) is connected to PD1 to demonstrate the interface to the Rabbit 5000 (or Rabbit 6000) microprocessor. Reset switch S2 is the hardware reset for the RCM5600W/ RCM6600W.

The Interface Board provides the user with RCM5600W/ RCM6600W connection points brought out conveniently to header socket J2. Other boards such as the Prototyping Board or the accessory boards from the Deluxe Development Kit can be plugged into header socket J2. The pinouts for header socket J2 are shown in Figure B-5.

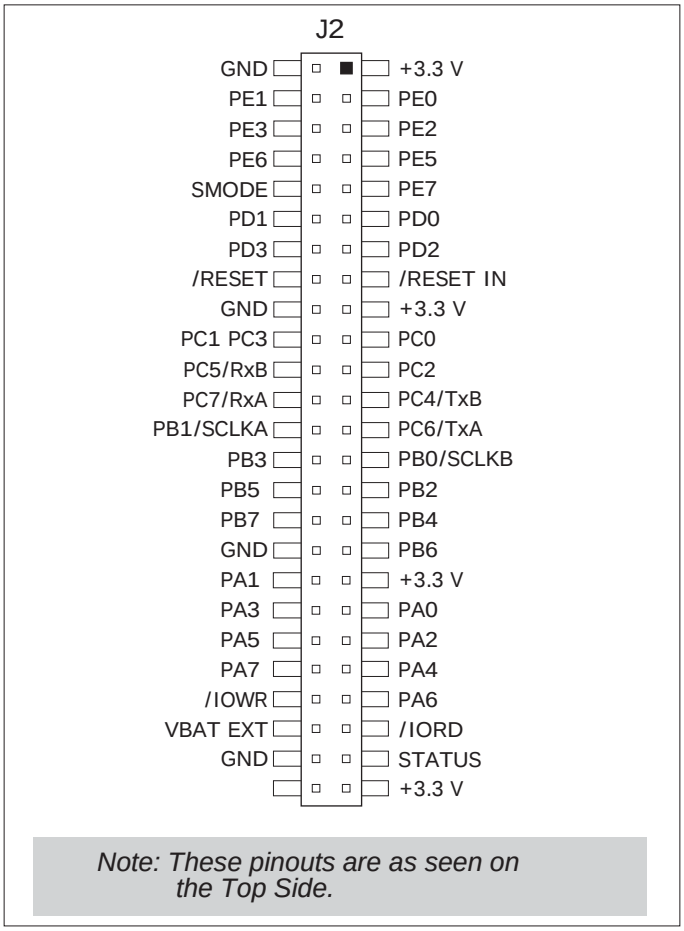

Figure B-5. Interface Board Pinout

Downloaded from Arrow.com.

B.4.1 Add Additional Boards

The Prototyping Board and the two accessory boards included with the Deluxe Development Kit may be installed on the Interface Board as shown in Figure B-6.

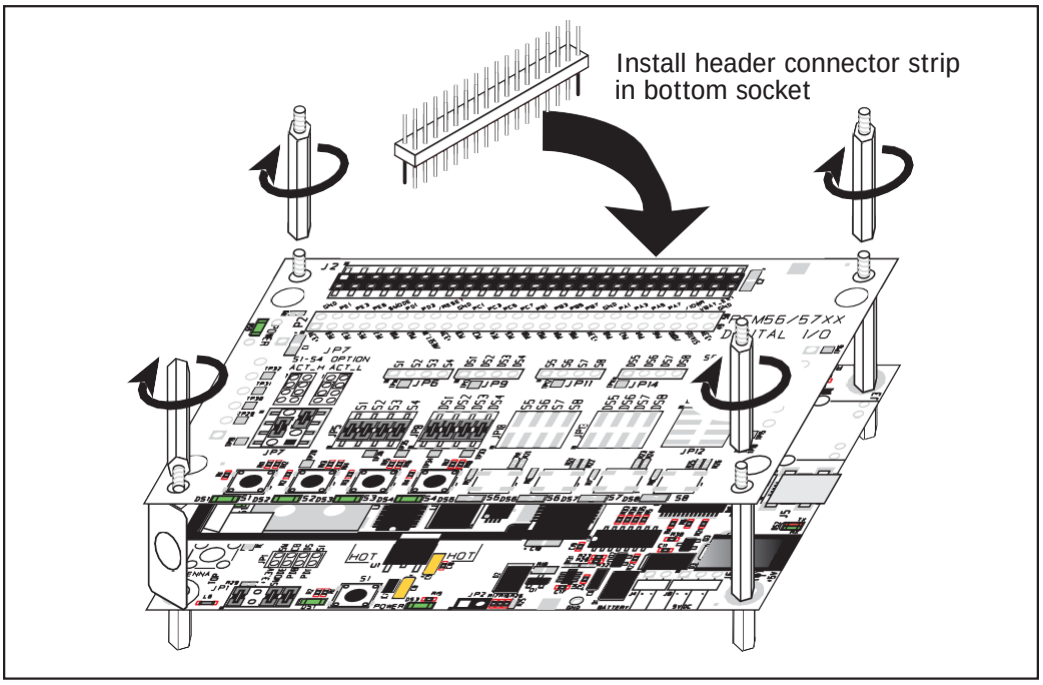

Figure B-6. Install Additional Boards on Interface Board

1. Insert the header strip into header socket J2 on the Interface Board or the board already installed above the Interface Board.
2. Line up the board being installed above the pins extending from the header socket and the stand-offs/connectors.
3. Press down to install the board.
4. Insert additional plastic standoffs/connectors as shown to hold the board firmly in place and to hold another board if desired.

When additional boards are installed, the board-to-board spacing is 0.7" (17.8 mm). Multiple boards should be installed in this sequence from bottom to top.

- Interface Board with RCM5600W/ RCM6600W installed.
- Prototyping Board.
- Serial Communication accessory board.
- Digital I/O accessory board.

Downloaded from Arrow.com.

B.5 Interface Board Jumper Configurations

Figure B-7 shows the header locations used to configure the various Interface Board options via jumpers.

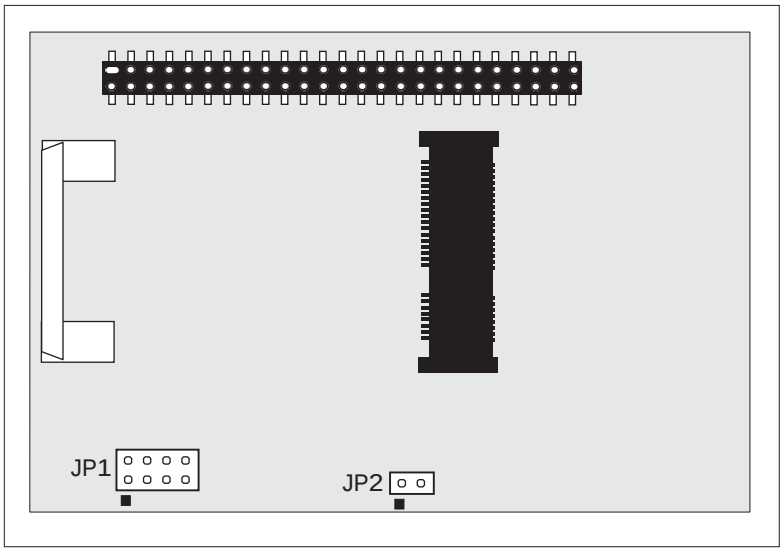

Figure B-7. Location of Configurable Jumpers on Interface Board

Table B-2 lists the configuration options using either jumpers or 0 Ω surface-mount resistors.

Table B-2. Interface Board Jumper Configurations

Header	Description	Pins Connected		Factory Default
JP1	Dynamic C Setup	1–2	SMODE pins pulled up (Programming Mode)*	×
		3–4	Reserved for future use	
		5–6	LED DS1 connected	×
		7–8	Switch S1 connected	×
JP2	mini USB Connector Power Supply Current Limiting	1–2	Nominal 700 mA	×
		n.c.	Nominal 500 mA	

* The RCM5600W/6600W will operate in Run Mode when these pins are not jumpered.

Downloaded from Arrow.com.

Downloaded from Arrow.com.

APPENDIX C. PROTOTYPING BOARD

Appendix C describes the features and accessories of the Prototyping Board, and explains the use of the Prototyping Board to build prototypes of your own circuits. The Prototyping Board mounts on the Interface Board from which it receives its power and signals.

Downloaded from Arrow.com.

C.1 Introduction

The Prototyping Board included in the Development Kit provides a prototyping area for more advanced hardware development. The Prototyping Board is shown below in Figure C-1, with its main features identified.

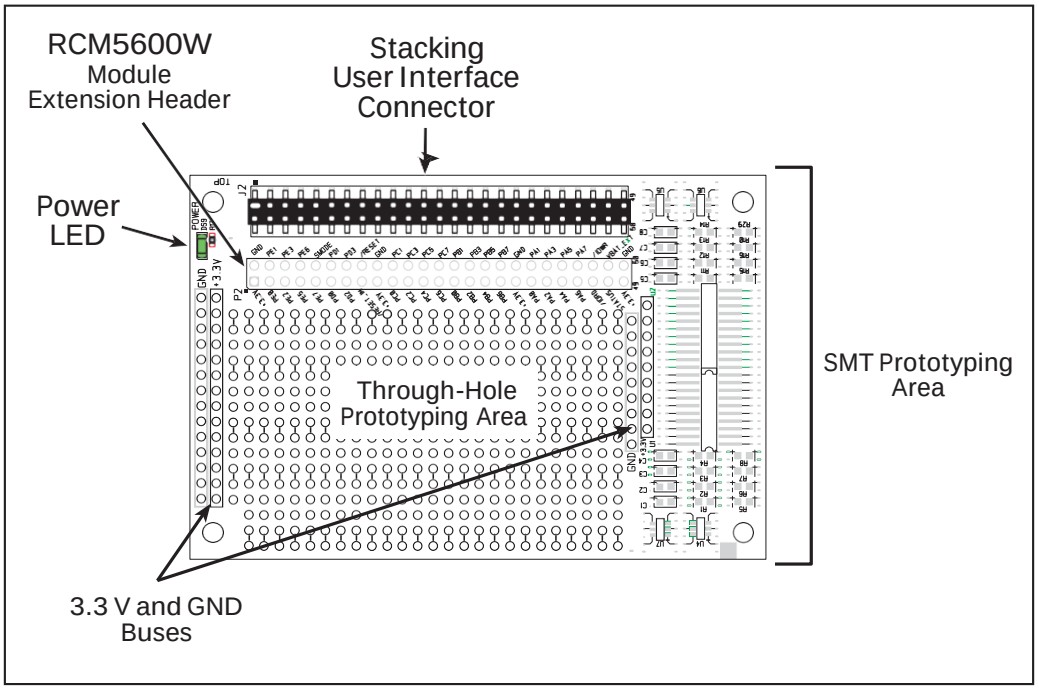

Figure C-1. Prototyping Board

C.1.1 Prototyping Board Features

- **Power Connection**—Power is supplied to the Prototyping Board via the RCM5600W header socket connections.
- **Power LED**—The power LED lights whenever power is connected to the Prototyping Board.
- **Module Extension Headers**—The complete pin set of the RCM5600W module is duplicated below header J2. Developers can solder wires directly into the appropriate holes, or, for more flexible development, a 2 × 25 header strip with a 0.1" pitch can be soldered into place. See Figure C-4 for the header pinouts.
- **Prototyping Area**—A generous prototyping area is provided for the installation of through-hole and surface-mount components. +3.3 V and ground buses run along the left and right edges of the through-hole prototyping area. The through-hole area is set up to accept components with a pitch of 0.1" or widths of 0.3" or 0.6". Several areas for surface-mount devices are also available. (Note that there are SMT pads on both the top and the bottom of the Prototyping Board.) Each SMT pad is connected to a hole designed to accept a 30 AWG solid wire.

Downloaded from Arrow.com.

C.2 Mechanical Dimensions and Layout

Figure C-2 shows the mechanical dimensions and layout for the Prototyping Board.

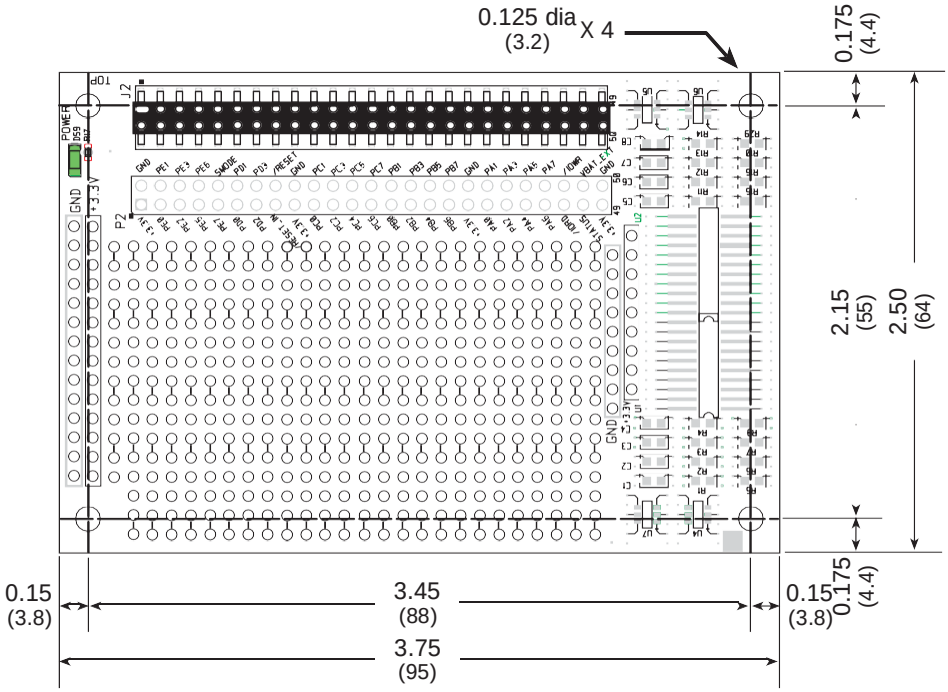

Figure C-2. Prototyping Board Dimensions

Downloaded from Arrow.com.

Table C-1 lists the electrical, mechanical, and environmental specifications for the Prototyping Board.

Table C-1. Prototyping Board Specifications

Parameter	Specification
Board Size	2.50" × 3.75" × 0.52" (64 mm × 95 mm × 13 mm)
Operating Temperature	–40°C to +85°C
Humidity	5% to 95%, noncondensing
Operating Voltage	+3.3 V DC
Current Draw from Interface Board (excluding user-added circuits)	2 mA
Prototyping Area	1.7" × 2.7" (40 mm × 70 mm) throughhole, 0.1" spacing, additional space for SMT components
Connectors	Two 2 × 25 IDC header sockets, 0.1" pitch (a 2 × 25 IDC header strip is included to connect the Prototyping Board to the Interface Board below it)
Standoffs/Spacers	4

Downloaded from Arrow.com.

C.2.1 Headers

The Prototyping Board has a header socket at J2 for physical connection to other boards above it, and a header socket at J12 on the bottom side to connect to boards below it. J2 and J12 are 2 × 25 SMT header sockets with a 0.1" pin spacing. Figure C-3 shows the layout of another board to be plugged into the Interface Board — this footprint is identical for the Prototyping Board and the two accessory boards. The values are relative to the mounting hole.

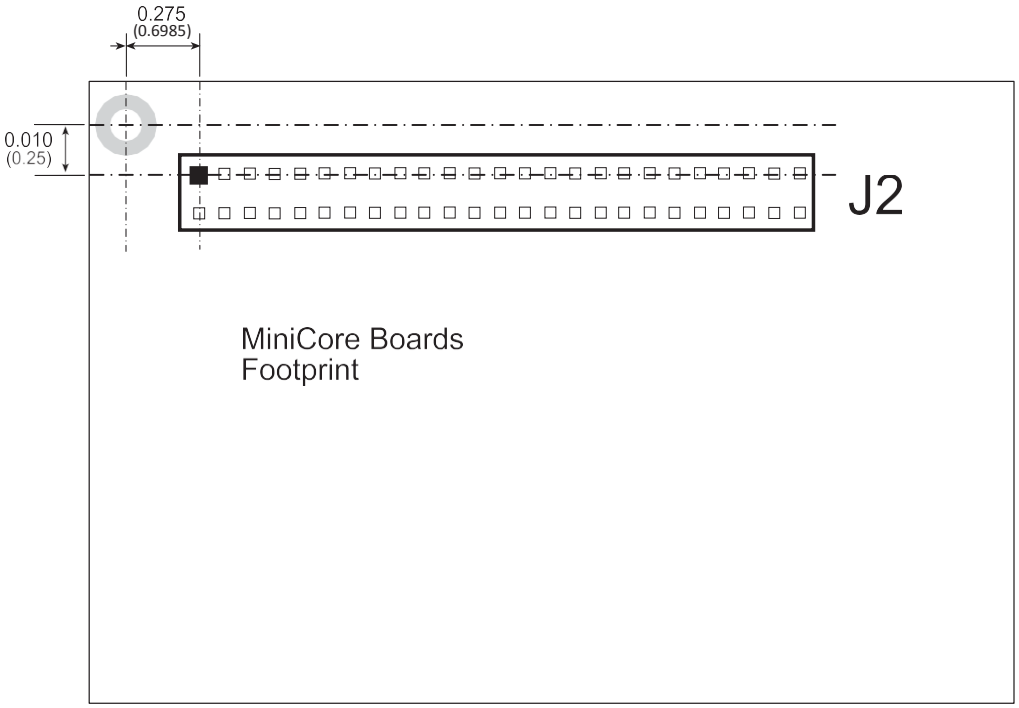

Figure C-3. MiniCore Boards Footprint

Downloaded from Arrow.com.

C.3 Using the Prototyping Board

The Prototyping Board provides the user with RCM5600W connection points brought out conveniently to labeled points below header J2. The pinouts for header socket J2 are shown in Figure C-4.

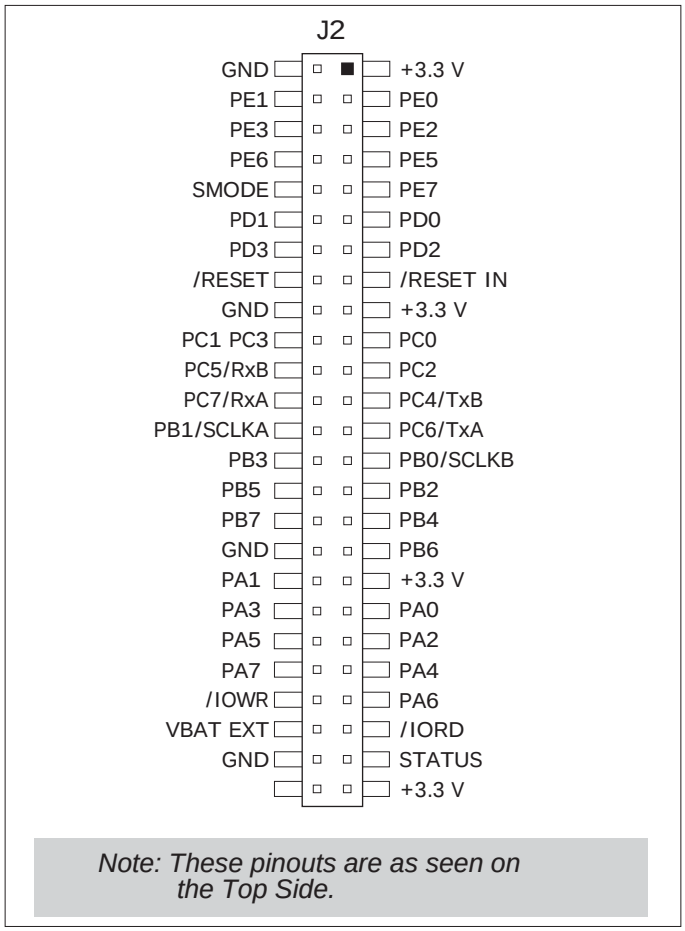

Figure C-4. MiniCore Boards Pinout

There is a 1.7" × 2.7" through-hole prototyping space available on the Prototyping Board. The holes in the prototyping area are spaced at 0.1" (2.5 mm). +3.3 V and GND traces run along the left edge of the Prototyping Board for easy access. Small to medium circuits can be prototyped using point-to-point wiring with 20 to 30 AWG wire between the prototyping area, the +3.3 V and GND traces, and the surrounding area where surface-mount components may be installed. Small holes are provided around the surface-mounted components that may be installed around the prototyping area.

Downloaded from Arrow.com.

C.3.1 Add Additional Boards

The Prototyping Board and the two accessory boards included with the Deluxe Development Kit may be installed on the Interface Board as shown in Figure C-5.

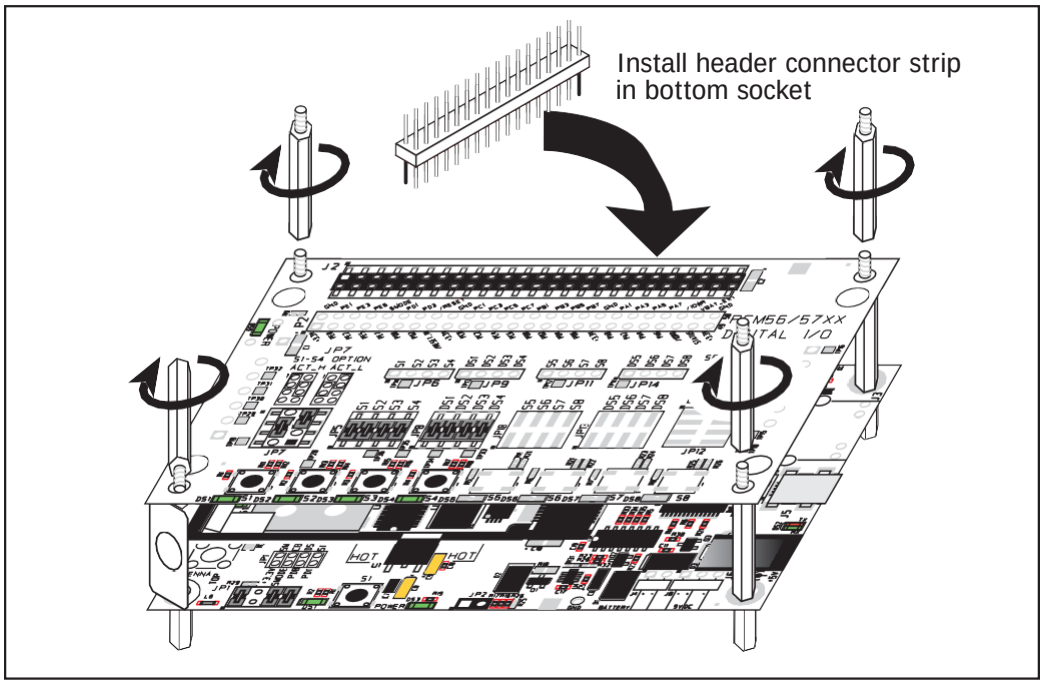

Figure C-5. Install Additional Boards

1. Insert the header strip into header socket J2 on the Interface Board or the board already installed above the Interface Board.
2. Line up the board being installed above the pins extending from the header socket and the stand-offs/connectors.
3. Press down to install the board.
4. Insert additional plastic standoffs/connectors as shown to hold the board firmly in place and to hold another board if desired—note that one plastic standoff/connector needs to be inserted "upside down" to secure the Prototyping Board to the antenna bracket.

When additional boards are installed, the board-to-board spacing is 0.7" (17.8 mm). Multiple boards should be installed in this sequence from bottom to top.

- Interface Board with RCM5600W/RCM6600W installed.
- Prototyping Board.
- Serial Communication accessory board.
- Digital I/O accessory board.

Downloaded from Arrow.com.

Downloaded from Arrow.com.

APPENDIX D. DIGITAL I/O ACCESSORY BOARD

Appendix D describes the features and accessories of the Digital I/O accessory board, and explains how to use the Digital I/O accessory board. The Digital I/O accessory board mounts on the Interface Board or other board already installed on the Interface Board from which it receives its power and signals.

Downloaded from Arrow.com.

D.1 Introduction

The Digital I/O accessory board included in the Deluxe Development Kit provides Push-button switches and LEDs to use in conjunction with selected sample programs. The Digital I/O accessory board is shown below in Figure D-1, with its main features identified.

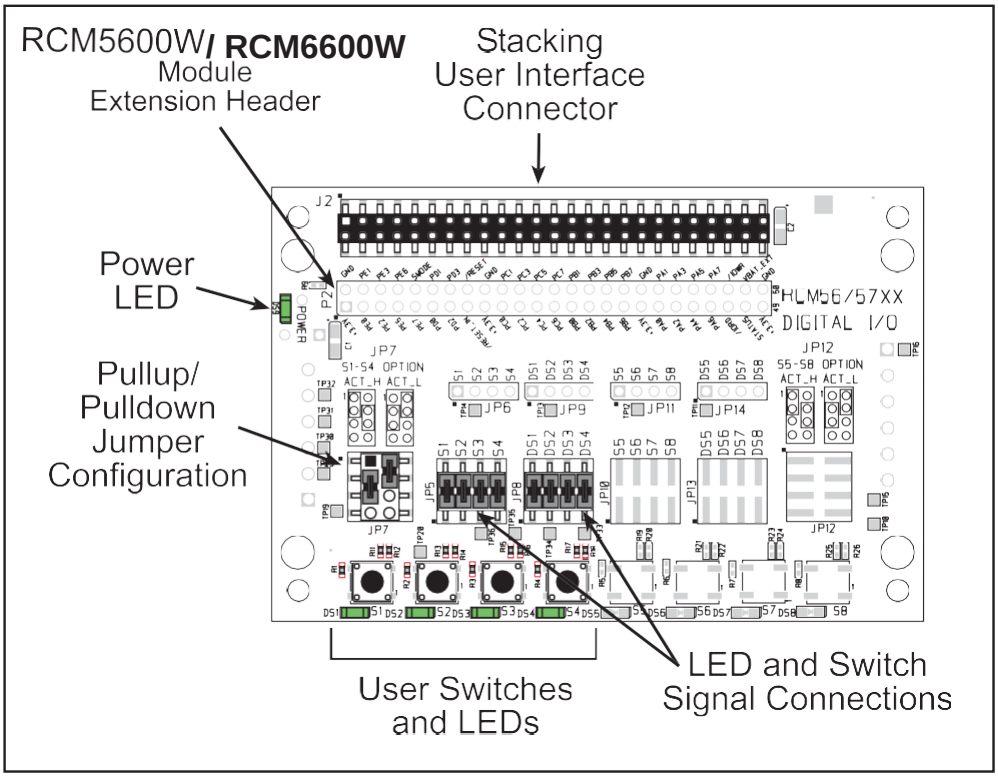

Figure D-1. Digital I/O Accessory Board

D.1.1 Digital I/O Accessory Board Features

- **Power Connection**—Power is supplied to the Digital I/O accessory board via the RCM5600W/ RCM6600W header socket connections.
- **Power LED**—The power LED lights whenever power is connected to the Digital I/O accessory board.
- **Module Extension Headers**—The complete pin set of the RCM5600W module is duplicated below header J2. Developers can solder wires directly into the appropriate holes, or, for more flexible development, a 2 × 25 header strip with a 0.1" pitch can be soldered into place. See Figure D-4 for the header pinouts.
- **I/O Switches and LEDs**—Four momentary-contact, normally open switches are connected to PB4–PB7 on the RCM5600W/ RCM6600W module and may be read as an input by sample applications.

  Four LEDs are connected to PA4–PA7 on the RCM5600W/ RCM6600W module, and may be driven as an output indicator by sample applications.

Downloaded from Arrow.com.

D.2 Mechanical Dimensions and Layout

Figure D-2 shows the mechanical dimensions and layout for the Digital I/O accessory board.

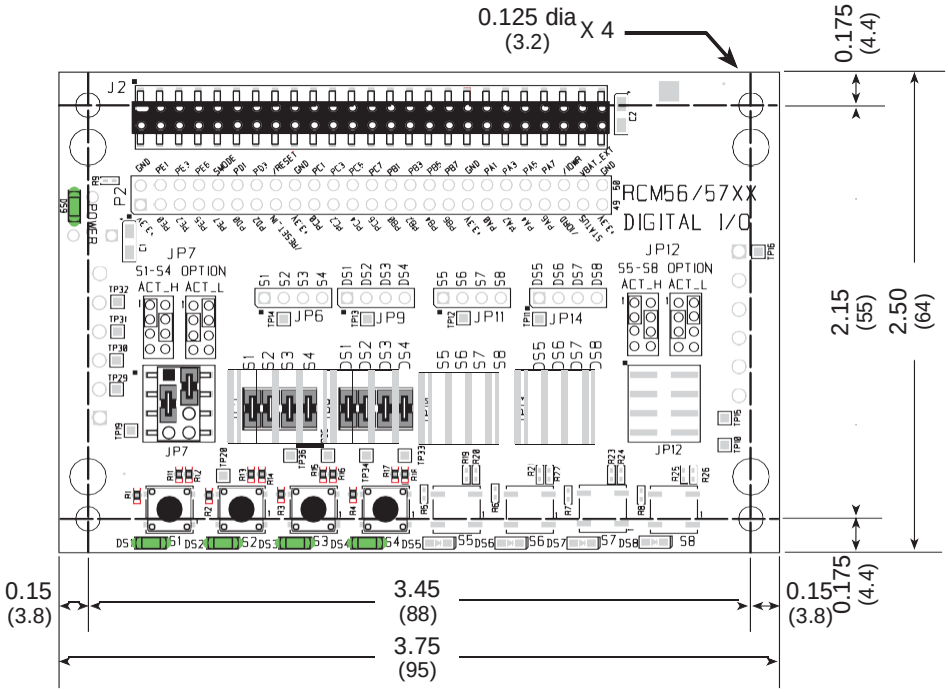

Figure D-2. Digital I/O Accessory Board Dimensions

Table D-1 lists the electrical, mechanical, and environmental specifications for the Digital I/O accessory board.

Table D-1. Digital I/O Accessory Board Specifications

Parameter	Specification
Board Size	2.50" × 3.75" × 0.52" (64 mm × 95 mm × 13 mm)
Operating Temperature	–40°C to +85°C
Humidity	5% to 95%, noncondensing
Operating Voltage	+3.3 V DC
Current Draw from Interface Board	6 mA (typical)
Connectors	Two 2 × 25 IDC header sockets, 0.1" pitch (a 2 × 25 IDC header strip is included to connect the Digital I/O accessory board to the board below it)
Standoffs/Spacers	4

Downloaded from Arrow.com.

D.2.1 Headers

The Digital I/O accessory board has a header socket at J2 for physical connection to other boards above it, and a header socket at J12 on the bottom side to connect to boards below it. J2 and J12 are 2 × 25 SMT header sockets with a 0.1" pin spacing. Figure D-3 shows the layout of another board to be plugged into the Digital I/O accessory board — this footprint is identical for the Prototyping Board and the two accessory boards. The values are relative to the mounting hole.

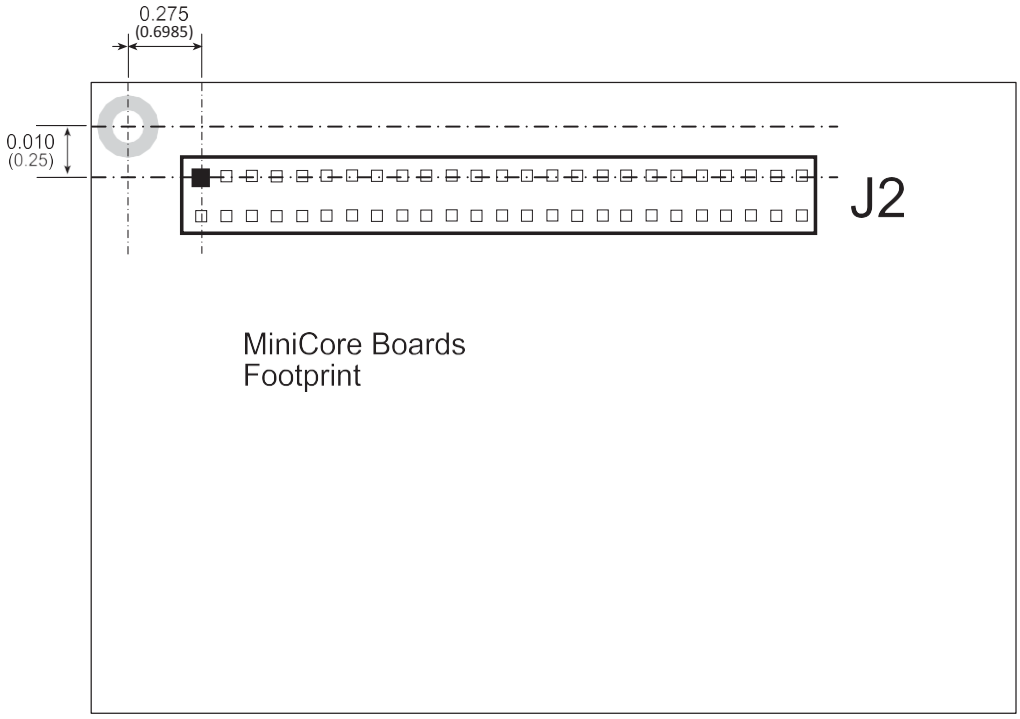

Figure D-3. MiniCore Boards Footprint

Downloaded from Arrow.com.

D.3 Using the Digital I/O Accessory Board

The Digital I/O accessory board provides the user with RCM5600W/ RCM6600W connection points brought out conveniently to labeled points below header J2. The pinouts for header socket J2 are shown in Figure D-4.

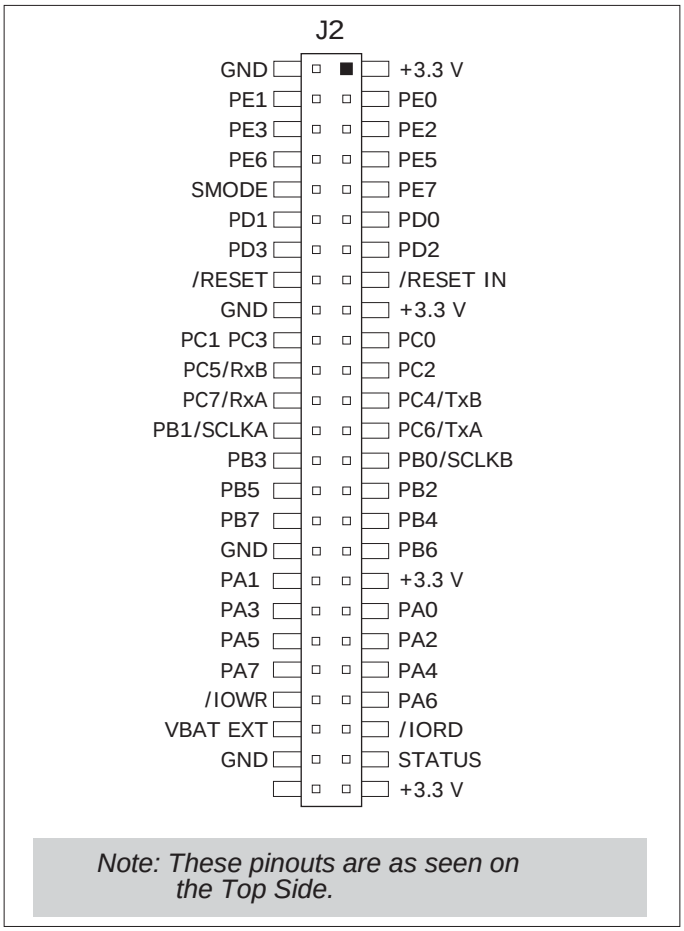

Figure D-4. MiniCore Boards Pinout

Downloaded from Arrow.com.

D.3.1 Configuration

The pushbutton switches may be configured active high (pulled down) or active low (pulled up) via jumper settings on header JP7 for the four switches installed. Jumpers on JP12 may be set up in a similar way after additional switches are installed at S5–S8.

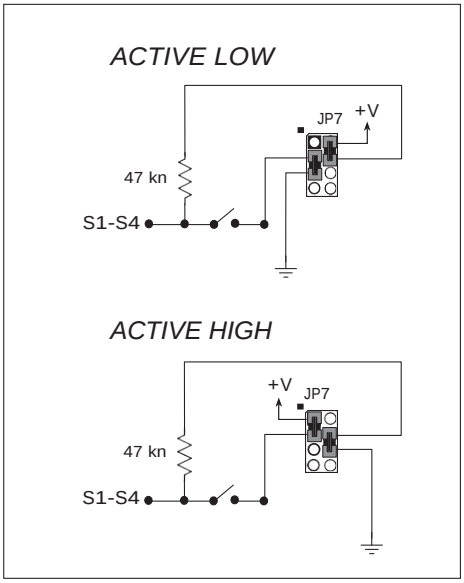

Figure D-5. Pushbutton Switch Configuration

The four LED output indicators are set up as sinking outputs. Four additional LEDs may be installed at DS5–DS8.

Jumpers on headers JP5 and JP8 connect the RCM5600W/ RCM6600W signals to the push button switches or LEDs. These jumpers may be removed and other RCM5600W/ RCM6600W signals may be connected to the switch or LED positions above these headers via headers JP6 and JP9. Table D-2 lists the connection options for the switches and LEDs.

Table D-2. Digital I/O Accessory Board Switch/LED Connection Options

Default RCM5600W Signal	Switch/LED	Connected via		Alternate Connection	
		Header	Pins	Header	Pin
PB4	S1*	JP5	1–2	JP6	1
PB5	S2		3–4		2
PB6	S3		5–6		3
PB7	S4		7–8		4

Downloaded from Arrow.com.

Table D-2. Digital I/O Accessory Board Switch/LED Connection Options (cont'd)

Default RCM5600W Signal	Switch/LED	Connected via		Alternate Connection	
		Header	Pins	Header	Pin
PA4	DS1	JP8	1–2	JP9	1
PA5	DS2		3–4		2
PA6	DS3		5–6		3
PA7	DS4		7–8		4
PB0	S5†	JP10	1–2	JP11	1
PB1	S6		3–4		2
PB2	S7		5–6		3
PB3	S8		7–8		4
PA0	DS5	JP13	1–2	JP14	1
PA1	DS6		3–4		2
PA2	DS7		5–6		3
PA3	DS8		7–8		4

* Switches S1–S4 are pulled high or low via jumpers on header JP7.

† Switches S5–S8 are pulled high or low via jumpers on header JP12 (not stuffed).

NOTE: Switches S5–S8, LEDs DS5–DS8, and the corresponding configuration headers JP10–JP14 and circuits are not stuffed.

Figure D-6 shows the locations of the configurable jumpers.

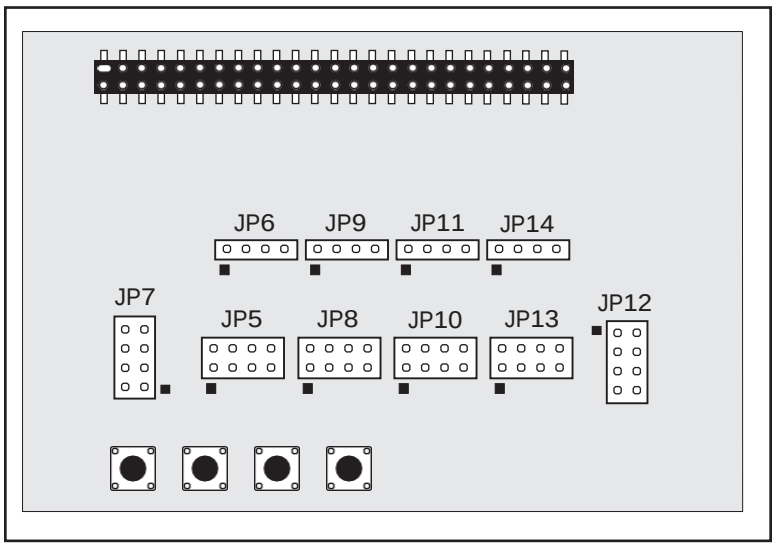

Figure D-6. Location of Configurable Jumpers on Digital I/O Accessory Board

Downloaded from Arrow.com.

D.3.2 Add Additional Boards

The Prototyping Board and the two accessory boards included with the Deluxe Development Kit may be installed on the Interface Board as shown in Figure D-7.

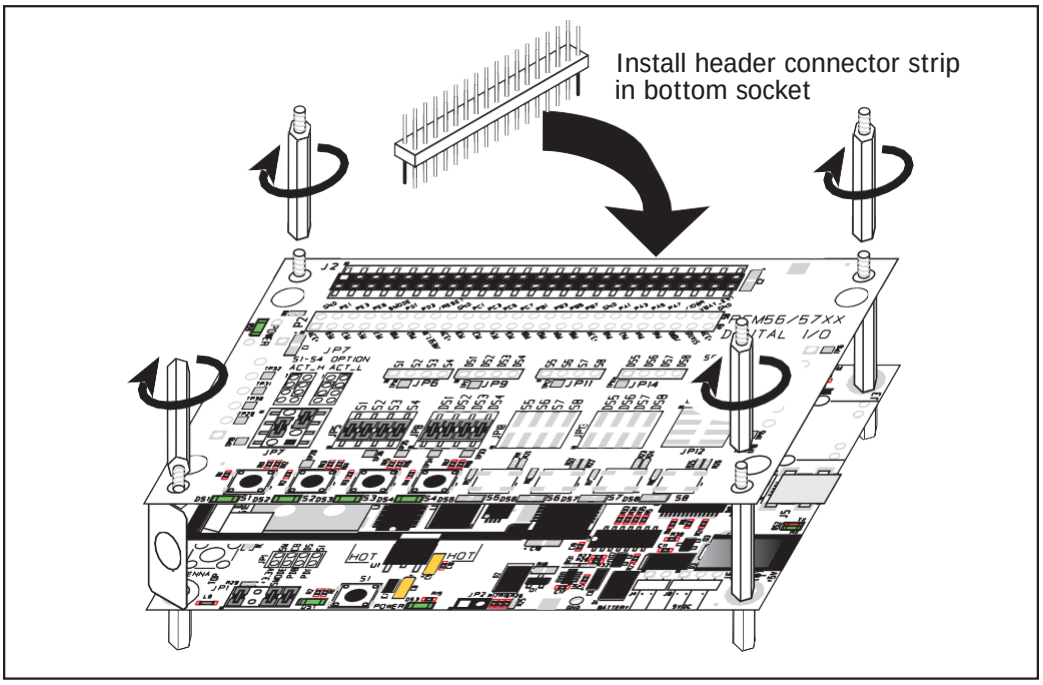

Figure D-7. Install Additional Boards

1. Insert the header strip into header socket J2 on the Interface Board or the board already installed above the Interface Board.
2. Line up the board being installed above the pins extending from the header socket and the stand-offs/connectors.
3. Press down to install the board.
4. Insert additional plastic standoffs/connectors as shown to hold the board firmly in place and to hold another board if desired—note that one plastic standoff/connector needs to be inserted "upside down" to secure the Prototyping Board or other accessory board above the antenna bracket.

When additional boards are installed, the board-to-board spacing is 0.7" (17.8 mm). Multiple boards should be installed in this sequence from bottom to top.

- Interface Board with RCM5600W/ RCM660W installed.
- Prototyping Board.
- Serial Communication accessory board.
- Digital I/O accessory board.

Downloaded from Arrow.com.

APPENDIX E. SERIAL COMMUNICATION ACCESSORY BOARD

Appendix E describes the features and accessories of the Serial Communication accessory board, and explains how to use the Serial Communication accessory board. The Serial Communication accessory board mounts on the Interface Board or other board already installed on the Interface Board from which it receives its power and signals.

Downloaded from Arrow.com.

E.1 Introduction

The Serial Communication accessory board included in the Deluxe Development Kit provides two 3-wire serial ports to use in conjunction with selected sample programs. The Serial Communication accessory board is shown below in Figure E-1, with its main features identified.

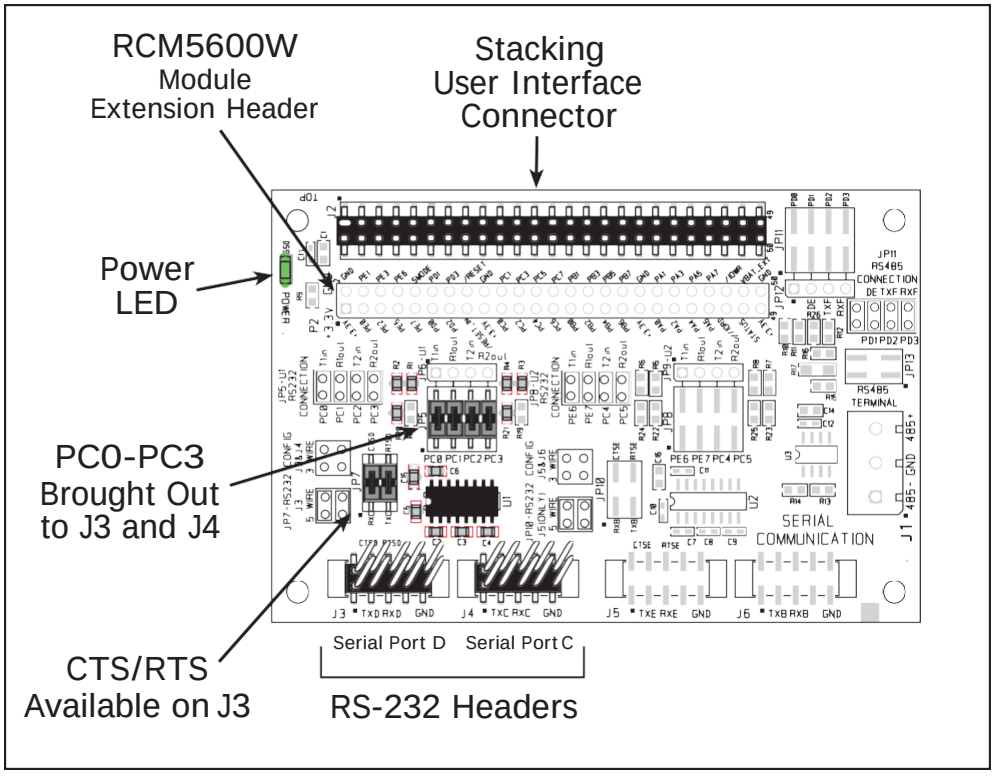

Figure E-1. Serial Communication Accessory Board

E.1.1 Serial Communication Accessory Board Features

- **Power Connection**—Power is supplied to the Serial Communication accessory board via the RCM5600W/ RCM6600W header socket connections.
- **Power LED**—The power LED lights whenever power is connected to the Serial Communication accessory board.
- **Module Extension Headers**—The complete pin set of the RCM5600W/RCM6600W module is duplicated below header J2. Developers can solder wires directly into the appropriate holes, or, for more flexible development, a 2 × 25 header strip with a 0.1" pitch can be soldered into place. See Figure E-4 for the header pinouts.
- **RS-232 Headers**—Serial Ports C and D are brought out as 3-wire RS-232 ports on headers J4 and J3 respectively. Header J3 can be set up as a 5-wire RS-232 serial port with flow control provided by Serial Port C.

Downloaded from Arrow.com.

E.2 Mechanical Dimensions and Layout

Figure E-2 shows the mechanical dimensions and layout for the Serial Communication accessory board.

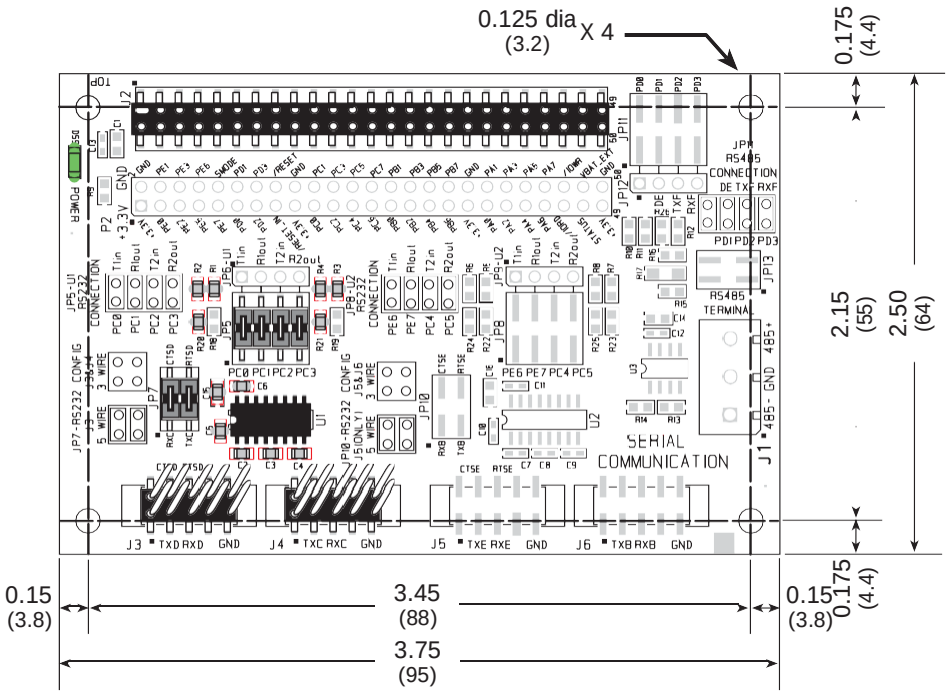

Figure E-2. Serial Communication Accessory Board Dimensions

Table E-1 lists the electrical, mechanical, and environmental specifications for the Serial Communication accessory board.

Table E-1. Serial Communication Accessory Board Specifications

Parameter	Specification
Board Size	2.50" × 3.75" × 0.52" (64 mm × 95 mm × 13 mm)
Operating Temperature	–40°C to +85°C
Humidity	5% to 95%, noncondensing
Operating Voltage	+3.3 V DC
Current Draw from Interface Board	10 mA (typical)
Connectors	Two 2 × 25 IDC header sockets, 0.1" pitch (a 2 × 25 IDC header strip is included to connect the Serial Communication accessory board to the board below it) Two 2 × 5 IDC headers, 0.1" pitch
Standoffs/Spacers	4

Downloaded from Arrow.com.

E.2.1 Headers

The Serial Communication accessory board has a header socket at J2 for physical connection to other boards above it, and a header socket at J12 on the bottom side to connect to boards below it. J2 and J12 are 2 × 25 SMT header sockets with a 0.1" pin spacing. Figure E-3 shows the layout of another board to be plugged into the Serial Communication accessory board — this footprint is identical for the Prototyping Board and the two accessory boards. The values are relative to the mounting hole.

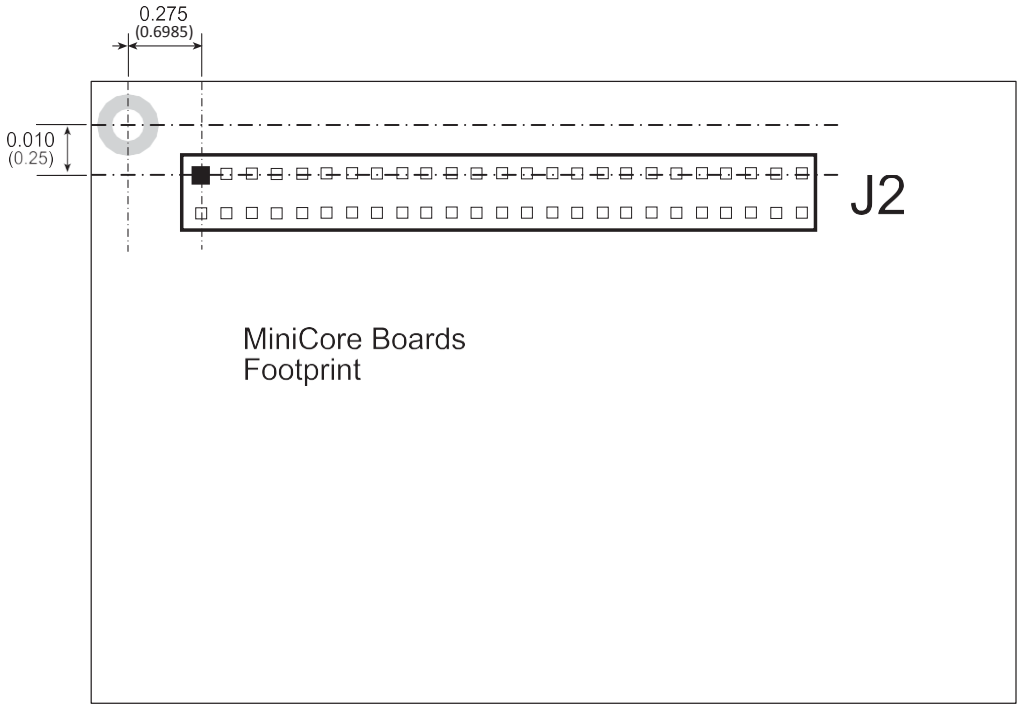

Figure E-3. MiniCore Boards Footprint

Downloaded from Arrow.com.

E.3 Using the Serial Communication Accessory Board

The Serial Communication accessory board provides the user with RCM5600W/ RCM6600W connection points brought out conveniently to labeled points below header J2. The pinouts for header socket J2 and the RS-232 headers at J3 and J4 are shown in Figure E-4.

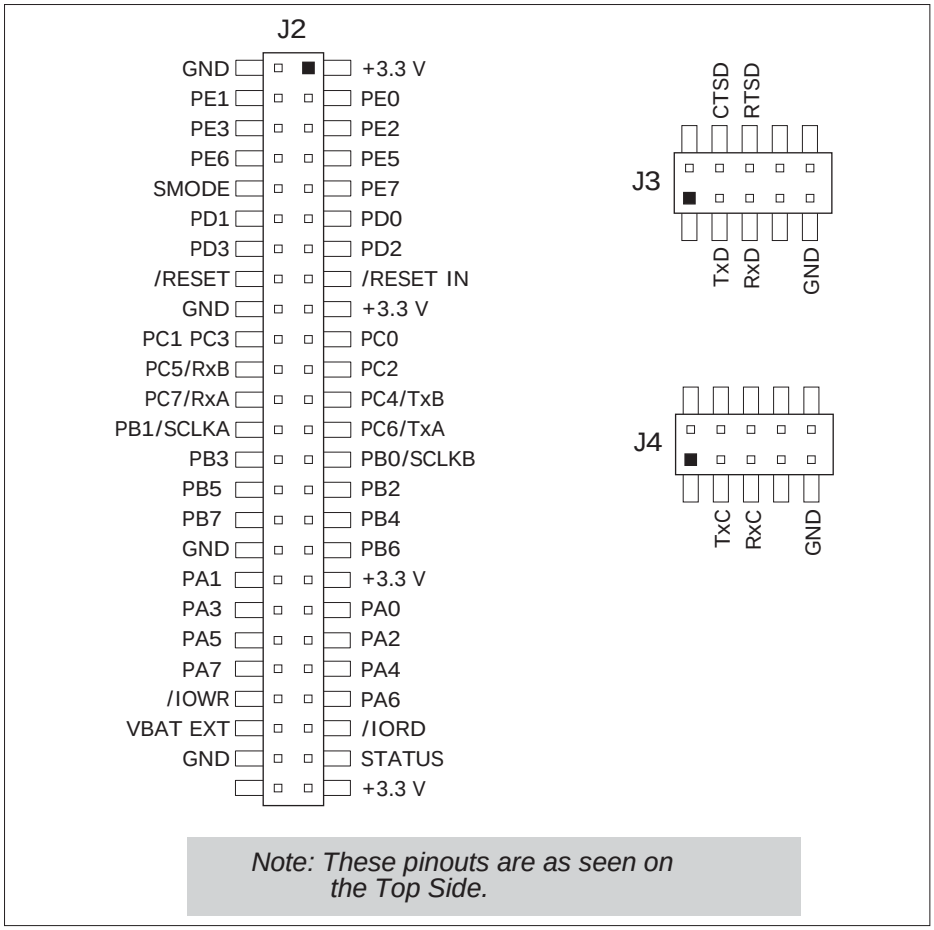

Figure E-4. Serial Communication Accessory Board Pinout

The remaining RS-232 header positions at J5 and J6, and the RS-485 screw-terminal header position at J1 are unstuffed.

Downloaded from Arrow.com.

E.3.1 Configuration

Serial Ports C and D are brought out as 3-wire RS-232 serial ports on headers J4 and J3 respectively. Jumpers may be installed on header JP7 to use header J3 as a 5-wire RS-232 serial port with flow control provided by Serial Port C.

Jumpers on headers JP5 connect the RCM5600W/ RCM6600W signals to the RS-232 transceiver. Jumpers may be installed on header JP7 to use header J3 as a 5-wire RS-232 serial port with flow control provided by Serial Port C. Note that Serial Port C does not support flow control using serial DMA, so the following macro must be used with flow control via Serial Port C on the Serial Communication accessory board.

```
#define SER_DMA_DISABLE
```

The jumpers at header JP5 connect the Serial Port D and Serial Port C signals to the RS-232 transceiver. These jumpers may be removed so that other RCM5600W/ RCM6600W serial port signals may be connected via JP6 to the RS-232 transceiver.

Table E-2. Serial Communication Accessory Board RS-232 Connection Options

Default RCM5600W Signal	Header	Serial Port	Connected via		Alternate Connection	
			Header	Pins	Header	Pin
PC0	J3	Serial Port D (RS-232)	JP5	1–2	JP6	1
PC1				3–4		2
PC2	J3/J4*	Serial Port C (RS-232)		5–6		3
PC3				7–8		4
PE6	J5	Serial Port E (RS-232)	JP8	1–2	JP9	1
PE7				3–4		2
PC4	J5/J6†	Serial Port B (RS-232)		5–6		3
PC5				7–8		4
PD0	—		JP11	1–2	JP12	1
PD1	J1‡	Flow Enable		3–4		2
PD2		Serial Port F (RS-485)		5–6		3
PD3				7–8		4

* Configured via header JP7.
† Configured via header JP10 (unstuffed).
‡ Termination and bias resistors enabled via header JP13 (unstuffed).

NOTE: Headers J1, J5, J6, and the associated circuits and configuration headers are not stuffed.

Downloaded from Arrow.com.

Figure E-5 shows the locations of the configurable header positions.

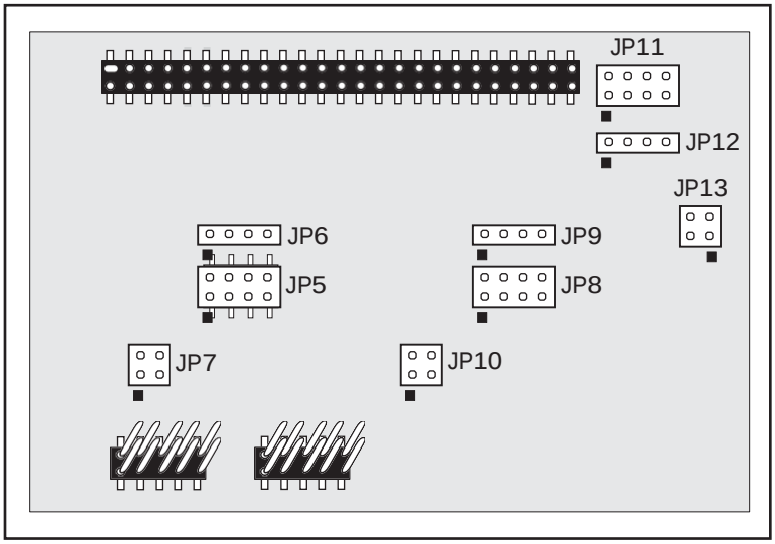

Figure E-5. Location of Configurable Jumpers on Serial Communication Accessory Board

Downloaded from Arrow.com.

E.3.2 Add Additional Boards

The Prototyping Board and the two accessory boards included with the Deluxe Development Kit may be installed on the Interface Board as shown in Figure E-6.

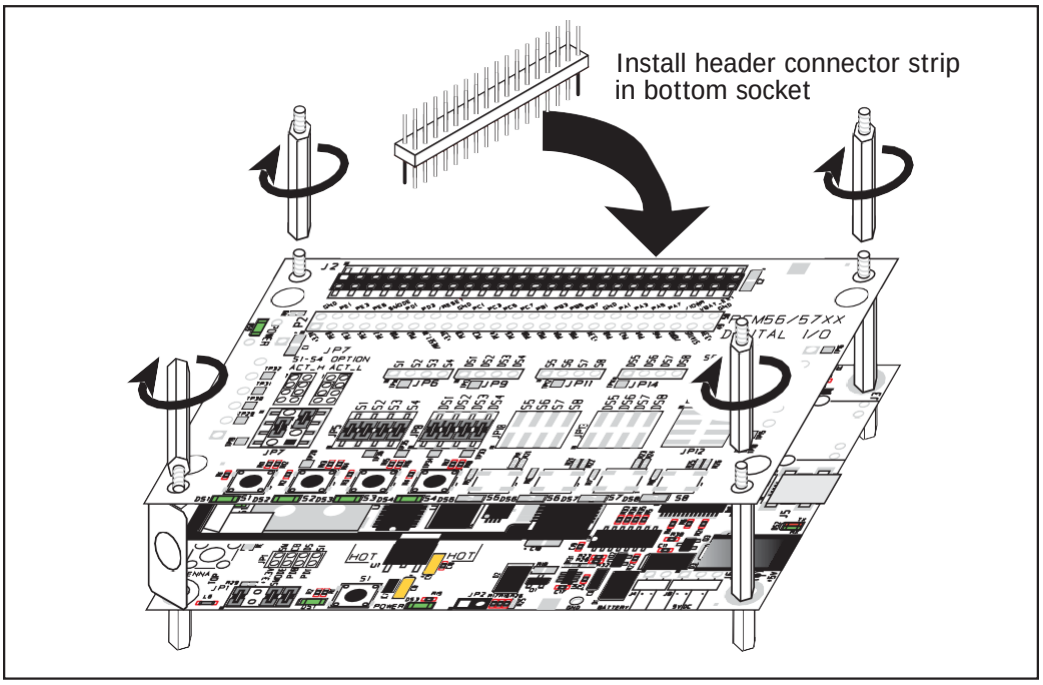

Figure E-6. Install Additional Boards

1. Insert the header strip into header socket J2 on the Interface Board or the board already installed above the Interface Board.
2. Line up the board being installed above the pins extending from the header socket and the stand-offs/connectors.
3. Press down to install the board.
4. Insert additional plastic standoffs/connectors as shown to hold the board firmly in place and to hold another board if desired—note that one plastic standoff/connector needs to be inserted "upside down" to secure the Prototyping Board or other accessory board above the antenna bracket.

When additional boards are installed, the board-to-board spacing is 0.7" (17.8 mm). Multiple boards should be installed in this sequence from bottom to top.

- Interface Board with RCM5600W/ RCM6600W installed.
- Prototyping Board.
- Serial Communication accessory board.
- Digital I/O accessory board.

Downloaded from Arrow.com.

APPENDIX F. POWER SUPPLY

Appendix F provides information on the current requirements of the RCM5600W/ RCM6600W, and includes some background on the chip select circuit used in power management.

F.1 Power Supplies

The RCM5600W/RCM6600W requires a regulated 3.15 V – 3.45 V DC power source. The MiniCore design presumes that the voltage regulator is on the user board, and that the power is made available to the RCM5600W/ RCM6600W board through the edge connectors.

An RCM5600W/ RCM6600W with no loading at the outputs operating at 73.73 MHz typically draws 85 mA, and may draw up to 625 mA while the Wi-Fi circuit is transmitting or receiving.

Downloaded from Arrow.com.

F.11 Battery Backup

The RCM5600W/RCM6600W modules do not include a battery, but there is provision for customer-supplied battery backup. Battery backup keeps the Rabbit 5000/6000 real-time clock running while also preserving content of the RCM5600W/RCM6600W families' battery-backable 32 KB SRAM as well as the RCM6650W module's external SRAM. Note that for the RCM5600W family, Dynamic C supports battery backup for only a 32 KB portion of the external SRAM.

The edge connector, shown in Figure F-1, allows access to the external battery. This makes it possible to connect an external 3 V power supply. This allows the internal Rabbit 5000 (or Rabbit 6000) real-time clock to retain data with the RCM5600W/ RCM6600W powered down.

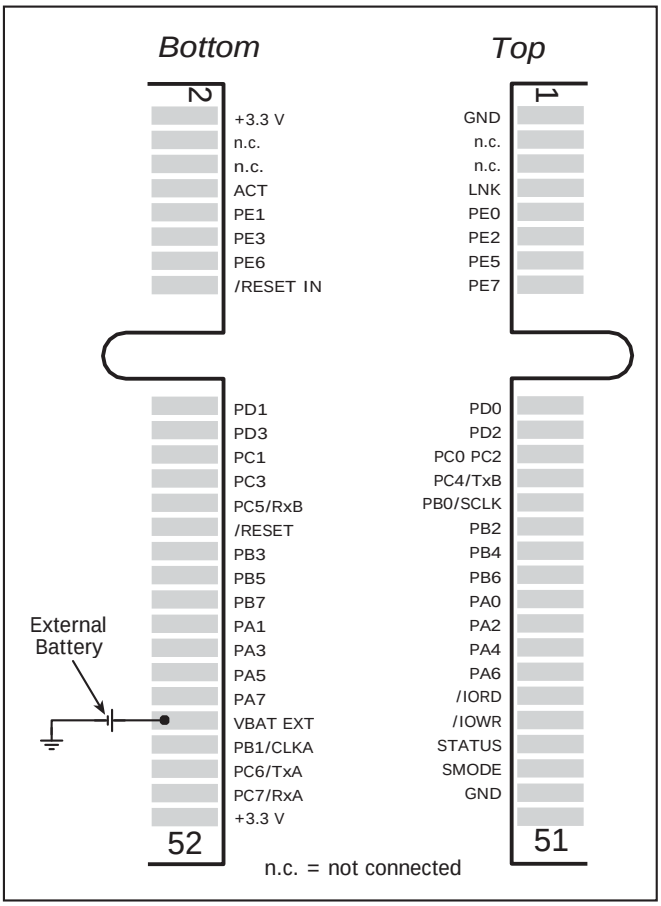

Figure F-1. External Battery Connections

A lithium battery with a nominal voltage of 3 V and a minimum capacity of 165 mA·h is recommended. A lithium battery is strongly recommended because of its nearly constant nominal voltage over most of its life.

The drain on the battery is typically 5uA for the RCM5600W and under 50uA for the RCM6600W when no other power is supplied.

Downloaded from Arrow.com.

The actual life in your application will depend on the current drawn by components not on the RCM5600W/ RCM6600W and on the storage capacity of the battery. The RCM5600W/ RCM6600W does not drain the battery while it is powered up normally.

Cycle the main power off/on on the RCM5600W/RCM6600W after you install a backup battery for the first time, and whenever you replace the battery. This step will minimize the current drawn by the real-time clock oscillator circuit from the backup battery should the RCM5600W experience a loss of main power.

> **NOTE:** Remember to cycle the main power off/on any time the RCM5600W/ RCM6600W is removed from the Interface Board or motherboard since that is where the backup battery would be located.

F.1.2 Battery-Backup Circuit

The battery-backup circuit serves the following purposes:

- It ensures that the circuit switches between main and battery power and prevents charging of the battery.
- Switches to battery power only when the +3.3 V system power supply is off.

F.1.3 Reset Generator

The RCM5600W/ RCM6600W uses a reset generator to reset the Rabbit 5000 and Rabbit 6000 microprocessor when the voltage drops below the voltage necessary for reliable operation. The reset occurs between 2.85 V and 3.00 V, typically 2.93 V. The RCM5600W/RCM6600W has a reset output on the edge connector. The push-pull type output of the reset generator of the MiniCore module is routed to the /RESET pin of the edge connector through a series current limiting resistor followed by a pull-down resistor. Therefore, depending on the application, the /RESET line on the customer's board may require a buffer circuit to feed external connections properly.

Downloaded from Arrow.com.

F.1.4 Onboard Power Supplies

The +3.3 V supplied to the RCM5600W/ RCM6600W powers most of the onboard circuits. In addition, there is a +1.8 V DC linear regulator that provides the core voltage to the Rabbit 5000 (or Rabbit 6000) microprocessor. Other linear regulators supply the additional voltage levels needed by the Wi-Fi circuits.

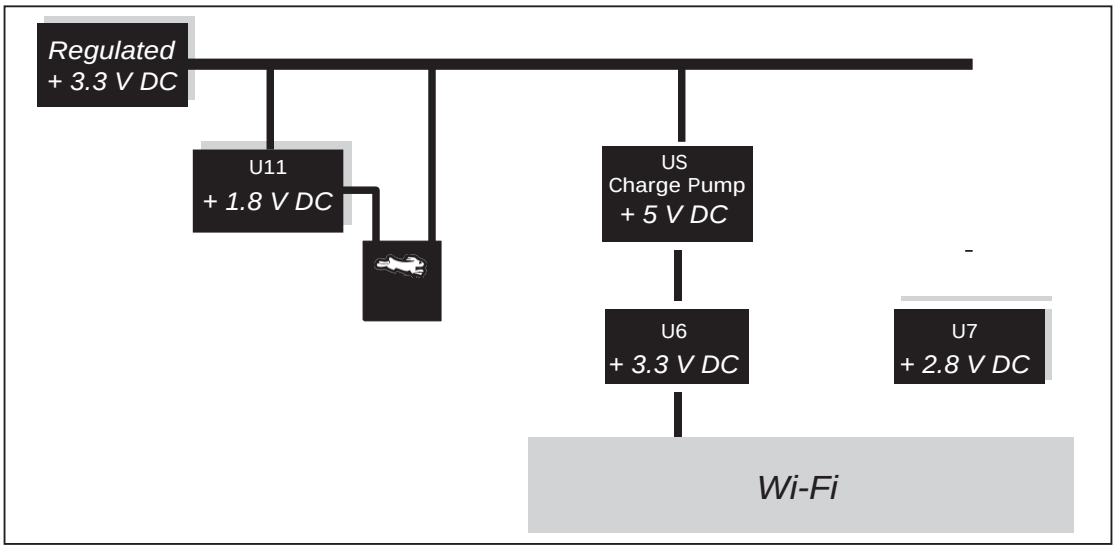

Figure F-2. RCM5600W/ RCM6600W Onboard Power Supplies

Downloaded from Arrow.com.

INDEX

A

accessory boards
Digital I/O 100
configuration options .. 104
LED outputs 104
pushbutton switches 104
dimensions 101
specifications 101
Serial Communication 108
configuration options .. 112
RTS/CTS 112
dimensions 109
specifications 109
accessory kit
mini PCI Express connector and standoffs 80
additional information
online documentation 5
antenna
extension 6
antenna connections
grounding requirements 6, 33
via bracket on Interface Board 12
via RP-SMA connector soldered to Interface Board 12

B

battery backup
battery life 117
circuit 117
reset generator 117
board initialization
function calls 45
brdInit() 45

C

certifications 6
Europe 8
FCC 6
Industry Canada 7
labeling requirements 7
clock doubler 36
compiler options 39
connectors
accessory kit 80
design and layout recommendations 78
mini PCI Express 78, 80
PCB footprint with latch connector 78
PCB footprint with standoffs 79

D

Development Kits 4
Deluxe Development Kit 4
AC adapter 4
accessory boards 4
Standard Development Kit .. 4
Dynamic C 4
Getting Started instructions 4
Interface Board 4
Prototyping Board 4
USB cable 4
digital I/O 22
function calls 41
memory interface 28
SMODE0 28
SMODE1 28
Digital I/O accessory board 99, 100
features 100
dimensions
Digital I/O accessory board 101
Interface Board 84
Prototyping Board 93
RCM5600W 74
Serial Communication accessory board 109
Dynamic C 5, 9, 14, 39
add-on modules 9, 46
installation 9
compiler options 39
libraries
BOOTDEV_SFLASH.LIB 42
Rabbit Embedded Security Pack 5, 46
sample programs 18
standard features
debugging 40
telephone-based technical support 5, 46
troubleshooting 15
upgrades and patches 46

E

exclusion zone 75
external I/O bus 28
software 28

F

features
Digital I/O accessory board 100
Interface Board 83
Prototyping Board 92
RCM5600W 2
Serial Communication accessory board 108

H

hardware connections 10
install RCM5600W on Interface Board 11
USB cable 12

Downloaded from Arrow.com.

I

install additional boards 88, 97, 106
Interface Board 82
dimensions 84
features 83
jumper configurations 89
jumper locations 89
mounting RCM5600W 11
power supply 86
power supply jack polarity 82
specifications 84

J

jumper configurations
accessory boards
Digital I/O 104
Serial Communication .112
Interface Board 89
Prototyping Board
JP2 (analog inputs reference) 89

L

labeling requirements 7
LEDs
Wi-Fi association and activity 33

O

operating region configuration .. 55
optional add-ons 5
antenna and connector cable 5
power supply 5

P

PCB footprint
mini PCI Express connector and latch 78
mini PCI Express connector and standoffs 79
pinout
Digital I/O accessory board 103
RCM5600W
alternate configurations .24
RCM5600W edge connectors 22
Serial Communication accessory board 111
power supplies
+3.3 V 115
battery backup 116
Program Mode 34
switching modes 34
programming
Remote Program Update 2
programming port 30
Prototyping Board 92
dimensions 93
expansion area 92
features 92
prototyping area 96
specifications 94

R

Rabbit 5000
tamper detection 37
VBAT RAM memory 37
Rabbit subsystems 23
RCM5600W
mounting on Interface Board 11
Run Mode 34
switching modes 34

S

sample programs 18
accessory boards
Digital I/O 19, 63
Serial Communication ...65
getting to know the RCM5600W
FLASHLED.C 18
SERIALTOSERIAL.C 19, 20
TOGGLESWITCH.C 18, 19
hardware setup 17
PC/notebook configuration 53
TCP_CONFIG.LIB 52
USERBLOCK_CLEAR.C 44
USERBLOCK_INFO.C 44
Wi-Fi
BROWSELED.C 64
PINGLED.C 60, 63, 64
PINGLED_STATS.C 62, 63, 64
PINGLED_WPA_PSK.C 60
PINGLED_WPA2_CCMP.C 61
SERIAL_TO_WIFI.C ... 65
SMTP.C 62
TOGGLESWITCH.C..... 63
WIFI_SCAN.C 55, 59
WIFI_SCANASSOCIATE.C 59
WIFIDHCPORTSTATIC.C 57
WIFIMULTIPLEAPS.C 57
WIFIPINGYOU.C 58
Wi-Fi configuration macros 52
Wi-Fi network configuration . 52
serial communication 29
function calls 41
software
PACKET.LIB 41
RS232.LIB 41
Serial Communication accessory board 108
features 108
serial flash memory
function calls 42
sbfRead 42
sbfWriteFlash 43
software
BOOTDEV_SFLASH.LIB 42
serial ports 29, 30
programming port 30
Serial Port B (shared) 29
Serial Port E
configuration information .. 29
Serial Port F
configuration information .. 29

Downloaded from Arrow.com.

software 5
external I/O bus 41
I/O drivers..... 41
libraries
BOOTDEV_SFLASH.LIB 42
TCP_CONFIG.LIB..... 67
sample programs..... 18
serial communication drivers 41
serial flash boot drivers..... 42
troubleshooting..... 15
Wi-Fi configuration at compile time..... 67
configuration macros 67
access point SSID 67
authentication..... 69
channel..... 68
enable/disable encryption 68
encryption keys 68
fragmentation threshold 70
mode 67
other macros..... 70
region/country..... 68
RTS threshold 70
select encryption key . 68
set WPA hex key..... 69
set WPA passphrase .. 69
WPA encryption..... 69
network configuration ... 67
TCPCONFIG macro 67
Wi-Fi configuration at run time..... 71
Wi-Fi drivers 44
specifications 73
accessory boards
headers 102, 110
Digital I/O accessory board 101
dimensions 74
electrical, mechanical, and environmental 76
exclusion zone..... 75
Interface Board..... 84
headers 85
Prototyping Board..... 94
headers 95
Rabbit 5000 DC characteristics..... 80
Serial Communication accessory board..... 109
spectrum spreader settings 36
subsystems
digital inputs and outputs .. 22
switching modes 34

T

tamper detection..... 37
technical support..... 16
troubleshooting 15

U

USB cable
connections 12
user block
function calls..... 44
readUserBlock()..... 37
writeUserBlock()..... 37

V

VBAT RAM memory..... 37

W

Wi-Fi
additional resources..... 72
bring interface down..... 71
bring interface up..... 71
circuit description 31
function calls
ifconfig() 67, 71
ifconfig(IF_WIFI0,…) .. 71
ifdown(IF_WIFI0)..... 71
ifup(IF_WIFI0)..... 71
sock_init()..... 71
sock_init_or_exit(1)..... 71
tcp_tick(NULL) 71
sample programs..... 55

Downloaded from Arrow.com.

Downloaded from Arrow.com.