© 2021 TE Connectivity. All Rights Reserved.

P	LTR	DESCRIPTION	DATE	DWN	APVD
	B10	ADDED NEW PN 1862029-5 DETAILS IN BOM	26FEB2021	JJH	JCB
	B11	REFER PCN: E-21-005125	11MAY2021	JJH	JCB
	B12	CORRECTION INSUL-HEIGHT FOR PN 1862029-5	27MAY2021	JJH	JCB
	B13	REVISION MISMACTH RESOLVED	08SEP2021	KMD	JCB

REVISIONS

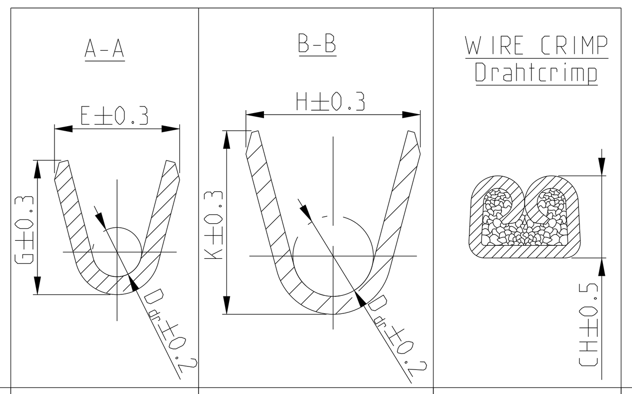

VERSION A

TE Connectivity ORDER - NO STRIP FORM Bandware (SERRATION DESIGN - 1)	REV	TE Connectivity ORDER - NO STRIP FORM Bandware (SERRATION DESIGN - 2)	REV	TE Connectivity ORDER - NO STRIP FORM Bandware (SERRATION DESIGN - 3)	REV	TE Connectivity ORDER - NO STRIP FORM Bandware (SERRATION DESIGN - 4)	REV	MATERIAL Werkstoff	SURFACE Oberflaeche
-	-	-	-	-	-	1862029-5	A	CuFe2	PRESILVERED vorversilbert △2
-	-	-	-	-	-				
-	-	-	-	-	-				
-	-	-	-	-	-				
-	-	-	-	-	-	-	-	-	-
-	-	-	-	-	-	-	-	-	
-	-	-	-	-	-	-	-	-	-
-	-	927839-2	C	-	-	-	-	CuSn4	PRETINNED vorverzinnt
-	-	927839-1	C	-	-	-	-	CuFe2	
-	-	-	-	927827-2	C	-	-	CuSn4	PRETINNED vorverzinnt
-	-	-	-	927827-1	C	-	-	CuFe2	
-	-	-	-	927833-5	D	-	-	CuFe2	△2
-	-	-	-	927833-2	D	-	-	CuSn4	PRETINNED vorverzinnt
-	-	-	-	927833-1	D	-	-	CuFe2	
927824-2	C	-	-	-	-	-	-	CuSn4	PRETINNED vorverzinnt
927824-1	C	-	-	-	-	-	-	CuFe2	
△13 963709-5	C	-	-	-	-	-	-	CuFe2	vorversilbert PRESILVERED △2
-	-	-	-	-	-	-	-	-	
-	-	-	-	-	-	-	-	-	-
△13 963709-2	C	-	-	-	-	-	-	CuSn4	vorverzinnt PRETINNED
△13 963709-1	C	-		-	-	-	-	CuFe2	
-	-	-	-	-	-	-	-	-	-
1241818-5	B	-	-	-	-	-	-	CuFe2	△2
1241818-1	B	-	-	-	-	-	-	CuFe2	vorverzinnt PRETINNED
-	-	927840-5	C	-	-	-	-	CuFe2	vorversilbert PRESILVERED △2
-	-	927840-4	C	-	-	-	-	CuSn4	
-	-	-	-	-	-	-	-	-	-
-	-	927840-2	C	-	-	-	-	CuSn4	vorverzinnt PRETINNED
-	-	927840-1	C	-	-	-	-	CuFe2	
~~-~~	~~-~~	~~-~~	~~-~~	~~△12 1-927831-5~~	~~C~~		~~-~~	~~CuFe2~~	△1
-	-	-	-	927831-5	C	-	-	CuFe2	vorversilbert PRESILVERED △2
-	-	-	-	927831-4	C	-	-	CuSn4	
-	-	-	-	-	-	-	-	-	-
-	-	-	-	927831-2	C	-	-	CuSn4	vorverzinnt PRETINNED
-	-	-	-	927831-1	C	-	-	CuFe2	
~~-~~	~~-~~	~~-~~	~~-~~	~~△12 1-927837-5~~	~~D~~		~~-~~	~~CuFe2~~	△1
-	-	-	-	927837-6	D	-	-	CuFe2	△4
-	-	-	-	927837-5	D	-	-	CuFe2	vorversilbert PRESILVERED △2
-	-	-	-	927837-4	D	-	-	CuSn4	
-	-	-	-	-	-	-	-	-	-
-	-	-	-	927837-2	D	-	-	CuSn4	vorverzinnt PRETINNED
-	-	-	-	927837-1	D	-	-	CuFe2	
~~△12 1-927829-5~~	~~D~~	~~-~~	~~-~~	~~-~~	~~-~~		~~-~~	~~CuFe2~~	△1
927829-5	D	-	-	-	-	-	-	CuFe2	△2
927829-2	D	-	-	-	-	-	-	CuSn4	vorverzinnt PRETINNED
927829-1	D	-	-	-	-	-	-	CuFe2	

DGB WIRE RANGE (mm²)	WIRE CRIMP Drahtcrimp	INSUL-CRIMP Isol - crimp	CRIMP HEIGHT Crimp-Hoehe	APPLICATION TOOL Anschlag-WKZ	HAND TOOL Handzange	A	B	C	D	E
0.35 - 0.5 FLR / 0.35 - 0.5 FLU	E = 2.37, G = 2.45, D_{Dr} = 0.8	H = 2.8, K = 3.1, D_{Dr} = 1.4	FLR: 0.5mm^2 = 1.14, 0.35mm^2 = 1.09; FLU: 0.5mm^2 = 1.14, 0.35mm^2 = 1.09	MQC- Applicator 2837770-2	-	2.5	3.8	6.6	19.5	△8 0.3
0.2 - 0.5 FLK	E = 2.2, G = 2.2, D_{Dr} = 0.8	H = 3.7, K = 3.8, D_{Dr} = 2.0	0.20mm^2 = 1.13, 0.25mm^2 = 1.15, 0.35mm^2 = 1.19, 0.50mm^2 = 1.26	MQC- Applicator 878426-2	539635-1 WITH DIE: mit Matrize 539744-2	2.5	3.8	6.6	19.5	△8 0.3
0.5 - 1.0 FLK	E = 2.8, G = 3.0, D_{Dr} = 1.1	H = 4.5, K = 4.7, D_{Dr} = 2.4	0.5mm^2 = 1.38, 0.75mm^2 = 1.47, 1.0mm^2 = 1.56	MQC- Applicator 2-541689-2	539733-2 WITH DIE: mit Matrize 734249-0	3	4.2	5.8	19.5	0.4
>1.0 - 2.5 FLK	E = 3.8, G = 4.1, D_{Dr} = 1.6	H = 5.7, K = 5.8, D_{Dr} = 3.6	1.5mm^2 = 1.76, 2.0mm^2 = 1.90, 2.5mm^2 = 2.04	MQC- Applicator 878367-2	539635-1 WITH DIE: mit Matrize 539733-2	3.5	4.7	6.3	19.5	0.4
>2.5 - 4.0 FLK	E = 4.6, G = 4.8, D_{Dr} = 2.4	H = 6.3, K = 6.6, D_{Dr} = 4.0	3.0mm^2 = 2.13, 3.5mm^2 = 2.24, 4.0mm^2 = 2.35	MQC- Applicator 2-878314-2	539635-1 WITH DIE: mit Matrize 539734-2	4	5.2	6.8	19.5	0.6
4.0 - 6.0 FLK	E = 5.2, G = 5.5, D_{Dr} = 2.9	H = 7.3, K = 7.6, D_{Dr} = 4.5	4.0mm^2 = 2.17, 5.0mm^2 = 2.36, 6.0mm^2 = 2.55	MQC- Applicator 2-878738-2	-	4.2	5.6	7.7	20 / 20.4	0.6
0.2 - 0.5 FLR	E = 2.2, G = 2.2, D_{Dr} = 0.8	H = 2.8, K = 2.8, D_{Dr} = 1.4	0.2mm^2 = 1.13, 0.35mm^2 = 1.19, 0.5mm^2 = 1.26	MQC- Applicator 878427-2	-	2.5	3.8	6.6	19.5	△8 0.3
0.5 - 1.0 FLR	E = 2.8, G = 3.0, D_{Dr} = 1.1	H = 3.9, K = 4.1, D_{Dr} = 1.8	0.5mm^2 = 1.43, 0.75mm^2 = 1.52, 1.0mm^2 = 1.61	MQC- Applicator 878328-2	169400-0 WITH DIE: mit Matrize 734781-1	3	4.2	5.8	19.5	0.4
>1.0 - 2.5 FLR	E = 3.8, G = 4.1, D_{Dr} = 1.6	H = 4.8, K = 4.9, D_{Dr} = 2.6	1.25mm^2 = 1.69, 1.5mm^2 = 1.76, 2.0mm^2 = 1.90, 2.5mm^2 = 2.04	MQC- Applicator 878356-2	169400-0 WITH DIE: mit Matrize 734251-0	3.5	4.7	6.3	19.5	0.4
>2.5 - 4.0 FLR	E = 4.6, G = 4.8, D_{Dr} = 2.4	H = 5.5, K = 5.7, D_{Dr} = 3.3	3.0mm^2 = 2.13, 3.5mm^2 = 2.24, 4.0mm^2 = 2.35	MQC- Applicator 2-878384-2	169400-0 WITH DIE: mit Matrize 734251-0	4	5.2	6.8	19.5	0.6

VERSION B

TE Connectivity ORDER - NO STRIP FORM Bandware (SERRATION DESIGN - 1)	REV	TE Connectivity ORDER - NO STRIP FORM Bandware (SERRATION DESIGN - 2)	REV	TE Connectivity ORDER - NO STRIP FORM Bandware (SERRATION DESIGN - 3)	REV	TE Connectivity ORDER - NO STRIP FORM Bandware (SERRATION DESIGN - 4)	REV	MATERIAL Werkstoff	SURFACE Oberflaeche
-	-	-	-	2-927836-2	C	-	-	CuSn4	△5
-	-	-	-	-	-	-	-	-	-
-	-	-	-	927836-2	C	-	-	CuSn4	vorverzinnt PRETINNED
-	-	-	-	927836-1	C	-	-	CuFe2	
-	-	-	-	2-927835-2	C	-	-	CuSn4	△5
-	-	-	-	2-927835-1	C	-	-	CuSn4	△6
-	-	-	-	1-927835-3	C	-	-	CuFe2	△6
-	-	-	-	-	-	-	-	-	-
-	-	-	-	927835-2	C	-	-	CuSn4	vorverzinnt PRETINNED
-	-	-	-	927835-1	C	-	-	CuFe2	
2-928966-2	D	-	-	-	-	-	-	CuSn4	△5
2-928966-1	D	-	-	-	-	-	-	CuSn4	△6
1-928966-3	D	-	-	-	-	-	-	CuFe2	△6
-	-	-	-	-	-	-	-	-	-
928966-2	D	-	-	-	-	-	-	CuSn4	vorverzinnt PRETINNED
928966-1	D	-	-	-	-	-	-	CuFe2	
1241962-1	B	-	-	-	-	-	-	CuFe2	vorverzinnt PRETINNED

DGB WIRE RANGE (mm²)	WIRE CRIMP Drahtcrimp	INSUL-CRIMP Isol - crimp	CRIMP HEIGHT Crimp-Hoehe	APPLICATION TOOL Anschlag-WKZ	HAND TOOL Handzange	A	B	C	D	E	SINGLE WIRE SEAL Einzeldichtung	DEAD END PLUG Blindstopfen
0.5 - 1.0 FLR	E = 2.8, G = 3.0, D_{Dr} = 1.1	H = 7.6, K = 7.7, D_{Dr} = 5.6	0.5mm^2 = 1.43, 0.75mm^2 = 1.52, 1.0mm^2 = 1.61	MQC- Applicator 878337-2	539635-1 WITH DIE: mit Matrize 739736-2	3	5.4	7.2	20	1.25	963243-1, 963244-1	100132-1
>1.0 - 2.5 FLR	E = 3.8, G = 4.1, D_{Dr} = 1.6	H = 7.6, K = 7.7, D_{Dr} = 5.6	1.5mm^2 = 1.76, 2.0mm^2 = 1.90, 2.5mm^2 = 2.04	MQC- Applicator 878338-2	539635-1 WITH DIE: mit Matrize 539736-2	3.5	5.9	7.7	20	1.25	963244-1, 963245-1	100132-1
>2.5 - 4.0 FLR	E = 4.6, G = 4.8, D_{Dr} = 2.4	H = 7.6, K = 7.7, D_{Dr} = 5.6	3.0mm^2 = 2.13, -, 4.0mm^2 = 2.35	MQC- Applicator 878441-2	539635-1 WITH DIE: mit Matrize 539736-2	4	5.9	7.7	20	1.25	963245-1	100132-1
>3.0 - 5.0 FLR	E = 4.8, G = 5.2, D_{Dr} = 2.5	H = 8.15, K = 7.8, D_{Dr} = 6.0	3.0mm^2 = 2.25, 4.0mm^2 = 2.50, 5.0mm^2 = 2.75	MQC- Applicator -	- WITH DIE: mit Matrize -	4	5.9	7.7	20	1.25	967011-1, 963245-1	100132-1

SRTIP FORM / Bandware — CRIMP DIMENSIONS (mm) Crimpabmessungen (mm)

EXTRACTION TOOL Ausdrueckwerkzeug Nr.:726503-1

TE CONNECTIVITY ORDER - No. △7

VERSION A (UNSEALED/ ungedichtet)

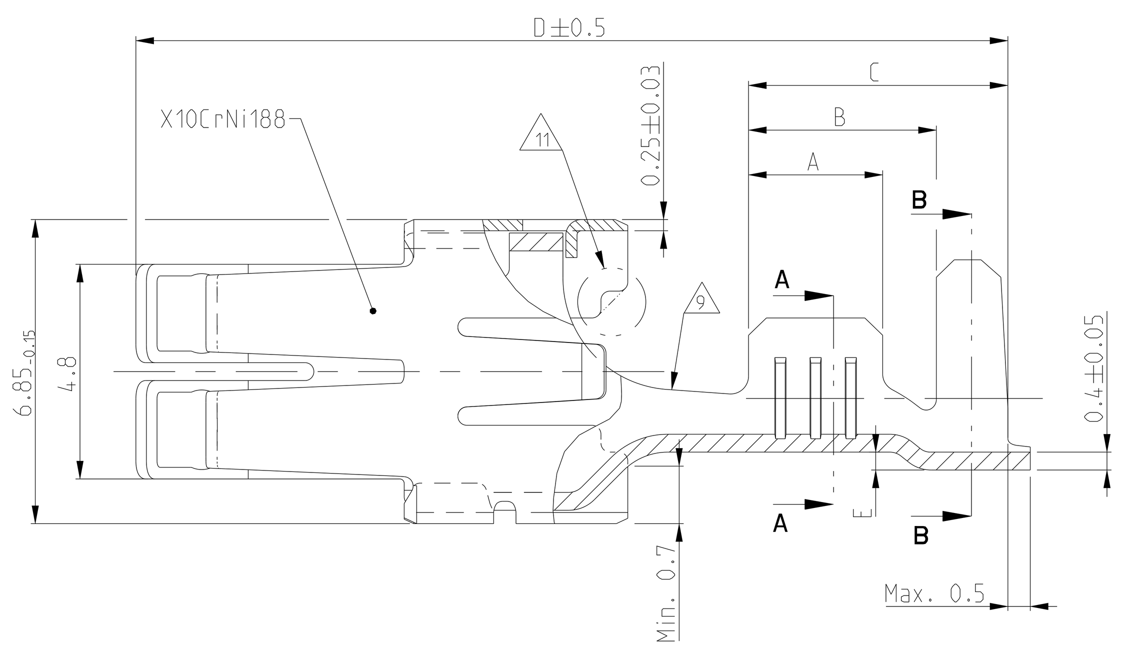

SERRATION DESIGN - 3

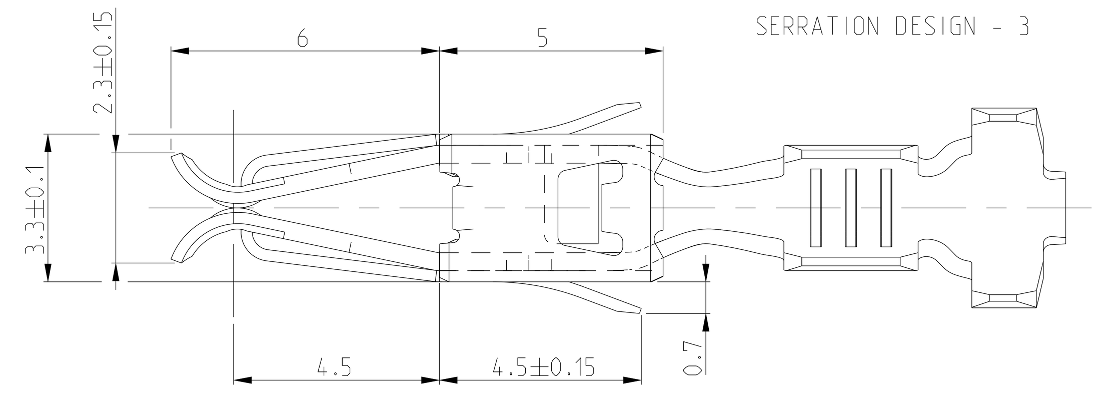

SERRATION DESIGN - 1

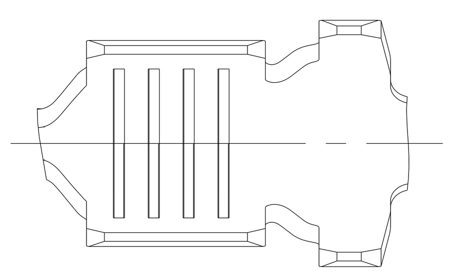

SERRATION DESIGN - 2

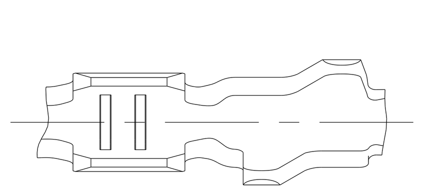

SERRATION DESIGN - 4

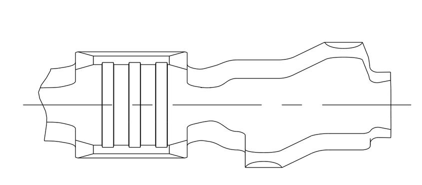

VERSION B (SINGLE WIRE SEAL/ Einzel-Dichtungs-System)

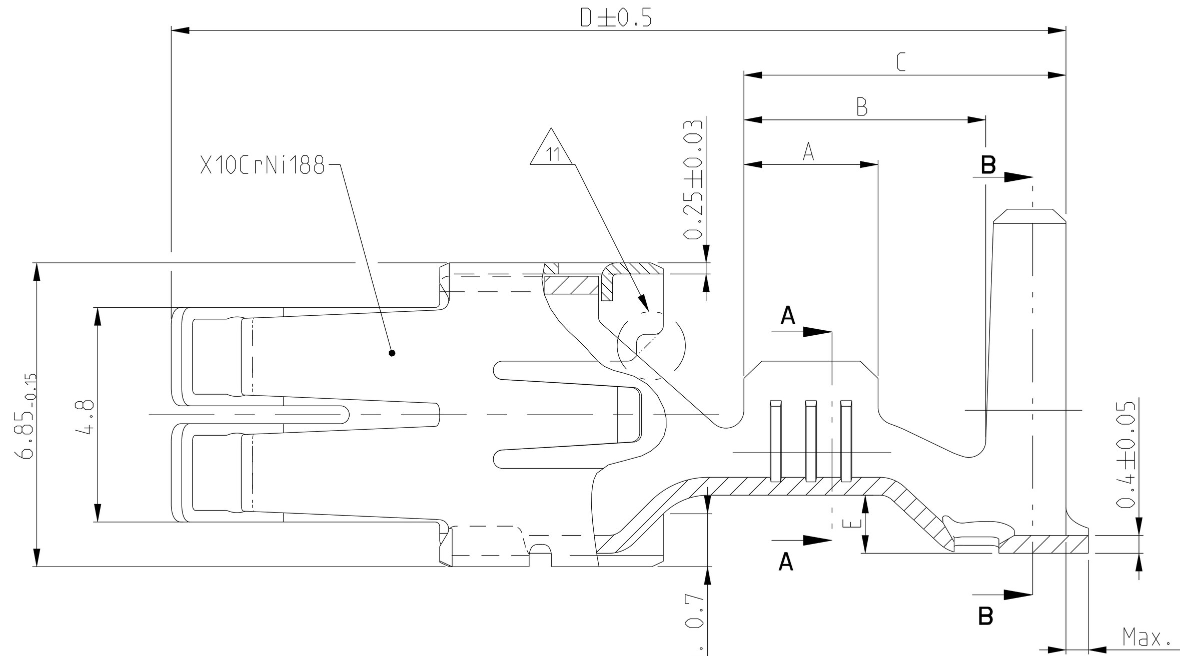

SERRATION DESIGN - 3

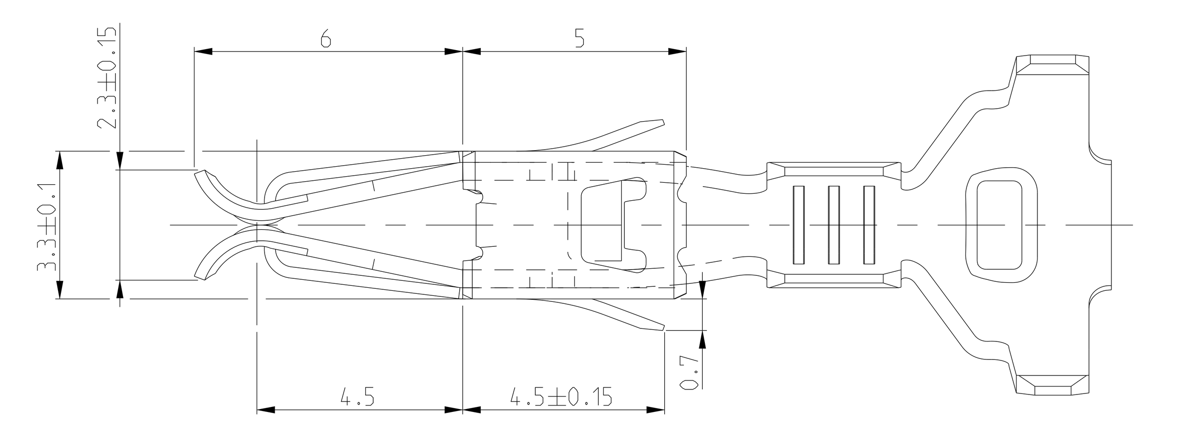

SERRATION DESIGN - 1

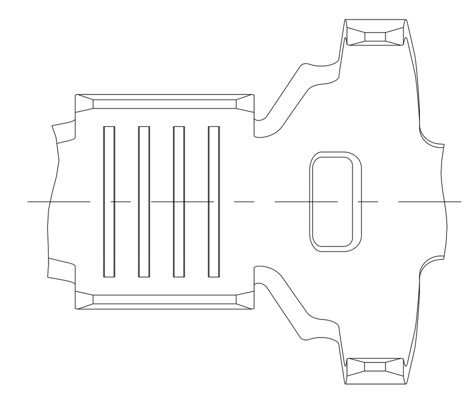

△1 CONTACT ZONE SELECTIVE
PRE SILVER PLATED MIN 3-4.5 µm
Kontaktzone selektiv
vorversilbert min. 3-4.5 µm

△2 CONTACT ZONE SELECTIVE
PRE SILVER PLATED MIN 1-1.5 µm
Kontaktzone selektiv
vorversilbert min. 1-1.5 µm

△3 CONTACT BODY: ELECTRO TIN PLATED OVER NICKEL
CONTACT AREA: GOLD PLATED
Kontaktkoerper: gal. verzinnt ueber Nickel
Kontaktzone: vergoldet

△4 CONTACT BODY: ELECTRO TIN PLATED OVER NICKEL
CONTACT AREA: SELECTIVE NICKEL PLATED 2-4 µm
Kontaktkoerper: gal. verzinnt ueber Nickel
Kontaktzone: selektiv vernickelt 2-4 µm

△5 CONTACT BODY: ELECTRO TIN PLATED OVER NICKEL
TOUCHING AREA TO CANTILEVER SPRING:
SELECTIVE AU PLATED OVER NICKEL
CANTILEVER SPRING: COMPLETELY AU PLATED
Kontaktkoerper: gal. verzinnt ueber Nickel
Anlageflaeche zur Ueberfeder
selektiv Au ueber Ni beschichtet
Ueberfeder: komplett Au beschichet

△6 CONTACT BODY: ELECTRO TIN PLATED OVER NICKEL
TOUCHING AREA TO CANTILEVER SPRING AND CONTACT AREA
SELECTIVE AU PLATED OVER NICKEL
CANTILEVER SPRING: COMPLETELY AU PLATED
Kontaktkoerper: gal. verzinnt ueber Nickel
Anlageflaeche zur Ueberfeder Kontaktzone
selektiv Au ueber Ni beschichtet
Ueberfeder: komplett Au beschichet

△7 PRE-FORM ISO-AREA
ONLY FOR PN: 1241962-1
Isoflanken vorgeformt
nur bei PN:1241962-1

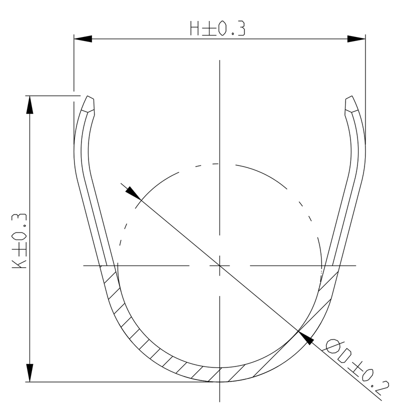

B-B

△8 WRAP CRIMP
ONLY FOR PN: 927839,927840,928989 AND 928990
Umfassungscrimp
nur bei PN: 927839,927840,928989 und 928990

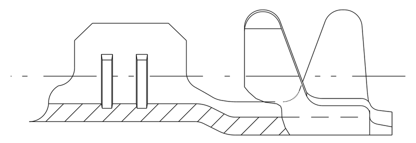

△9 TRANSITION ONLY FOR PN 927827,927828,927829,
927830,927833,927834,927837 AND 927838
Uebergang nur fuer PN 927827,927828,927829,
927830,927833,927834,927837 und 927838

△10 1-3 µm Sn28M LAYER FOR HIGHER TEMPERATURE REQUIREMENTS
1-3 µm Sn28M Schicht fuer hoehere Temperaturanforderungen

△11 DOTTED LINE IS ALTERNATIVE SHAPE
Gestrichelte Linie alternative Form

△12 OBSOLETE

△13 SEE APPLICATION SPEC. FOR PREFERRED STANDARD TO MEET NEW REQUIREMENT
LV214-2 SLOW MOTION BENDING TEST
Siehe Verarbeitungs Spezifikation fuer bevorzugten Standard um den neuen
Anforderungen der LV214-2 Slow Motion Pruefung zu genuegen

EXTRACTION TOOL	1-1579007-6, 968107-1
MATERIAL	-
FINISH	-
THIS DRAWING IS A CONTROLLED DOCUMENT. DIMENSIONIG AND TOLERANCING PER GPS (ISO STANDARDS).	
DIMENSIONS:	mm
TOLERANCES UNLESS OTHERWISE SPECIFIED:	0 PLC ±0.2mm; ANGLES ±2°
DWN	M.PFEILSCHIFTER 06APR2011
CHK	V.HUHN 17MAY2000
APVD	M.BLEICHER 17MAY2000
PRODUCT SPEC	108-18025
APPLICATION SPEC	114-18037
WEIGHT	-
NAME	STANDARD POWER TIMER CONTACT / Standard Power Timer Kontakt
SIZE	A0
CAGE CODE	00779
DRAWING NO	C-1355048
SCALE	10:1
SHEET	1 OF 1
REV	B13
	CUSTOMER DRAWING

TE Connectivity