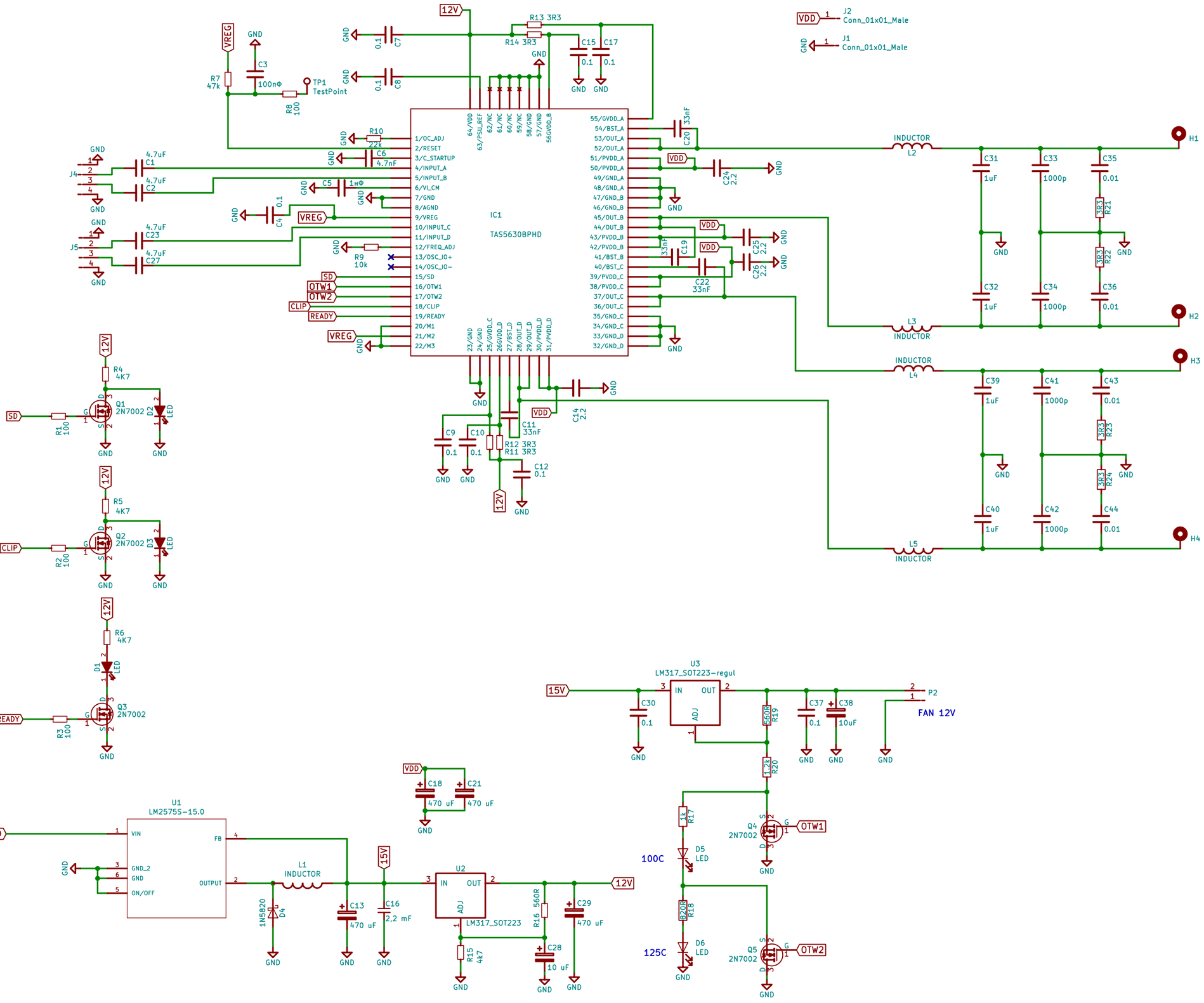
IC1
TAS5630BPHD
1/OC_ADJ
2/RESET
3/C_STARTUP
4/INPUT_A
5/INPUT_B
6/VI_CM
7/GND
8/AGND
9/VREG
10/INPUT_C
11/INPUT_D
12/FREQ_ADJ
13/OSC_IO+
14/OSC_IO-
15/SD
16/OTW1
17/OTW2
18/CLIP
19/READY
20/M1
21/M2
22/M3
23/GND
24/GND
25/GVDD_C
26GVDD_D
27/BST_D
28/OUT_D
29/OUT_D
30/PVDD_D
31/PVDD_D
64/VDD
63/PSU_REF
62/NC
61/NC
60/NC
59/NC
58/GND
57/GND
56GVDD_B
55/GVDD_A
54/BST_A
53/OUT_A
52/OUT_A
51/PVDD_A
50/PVDD_A
49/GND_A
48/GND_A
47/GND_B
46/GND_B
45/OUT_B
44/OUT_B
43/PVDD_B
42/PVDD_B
41/BST_B
40/BST_C
39/PVDD_C
38/PVDD_C
37/OUT_C
36/OUT_C
35/GND_C
34/GND_C
33/GND_D
32/GND_D
12V
VREG
GND
VDD
SD
OTW1
OTW2
CLIP
READY
R13 3R3
R14 3R3
C15
C17
C7
C8
C3
100nΦ
R7
47k
R8
100
TP1
TestPoint
R10
22k
C6
4.7nF
C5
1nΦ
C4
0.1
R9
10k
J4
J5
C1
C2
C23
C27
4.7uF
C20
33nF
C24
2.2
C19
C22
C25
C26
C9
C10
C11
33nF
R12 3R3
R11 3R3
C12
C14
2.2
J2
Conn_01x01_Male
J1
Conn_01x01_Male
INDUCTOR
L2
L3
L4
L5
H1
H2
H3
H4
C31
C32
C33
C34
C35
C36
C39
C40
C41
C42
C43
C44
1uF
1000p
0.01
3R3
R21
R22
R23
R24
R4
4K7
R5
4K7
R6
4K7
Q1
2N7002
Q2
2N7002
Q3
2N7002
D2
D3
D1
LED
R1
100
R2
100
R3
100
U3
LM317_SOT223-regul
IN
OUT
ADJ
15V
C30
0.1
560R
R19
1.2k
R20
C37
0.1
C38
10uF
P2
FAN 12V
1k
R17
D5
LED
100C
620R
R18
D6
LED
125C
Q4
2N7002
Q5
2N7002
OTW1
OTW2
U1
LM2575S-15.0
VIN
FB
GND_2
GND
ON/OFF
OUTPUT
L1
INDUCTOR
1N5820
D4
C13
470 uF
C16
2,2 mF
C18
470 uF
C21
470 uF
U2
LM317_SOT223
R15
4K7
R16 560R
C28
10 uF
C29
470 uF