DO NOT SCALE
DIMENSIONS IN mm

METRIC

THIRD ANGLE PROJECTION

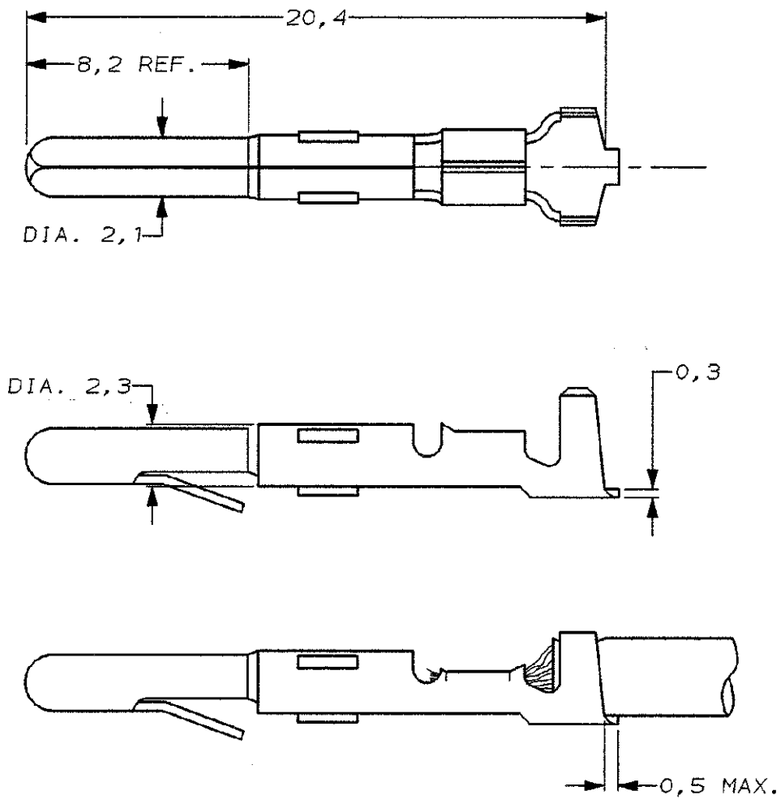

WIRE RANGE : 0,5-1,0mm
INSULATION RANGE : 1,8-3,3 DIA.

	-	-	-
		-	-
	-	-	-
	-	-	-
	-	-	-
	-	-	-
	-	-	-
	-	-	-
	-	-	-
	PRE-TINPLATED	PHOSPHOR BR.	163305-4
	UNPLATED	PHOSPHOR BR.	163305-3
	PRE-TINPLATED	BRASS	163305-2
	UNPLATED	BRASS	163305-1
-	PLATING	MATERIAL	PARTNUMBER

LTR.	REVISION RECORD	DR.	CHK.	DATE
-	-	-	-	-
-	-	-	-	-
-	-	-	-	-
-	-	-	-	-
-	-	-	-	-
-	-	-	-	-
-	-	-	-	-
C	EH-1221-96	JvL	AB	24-10-96

CUSTOMER DRAWING — FOR REFERENCE ONLY WILL NOT BE UPDATED

© COPYRIGHT 19- BY AMP HOLLAND B.V.
ALL INTERNATIONAL RIGHTS RESERVED. AMP PRODUCTS MAY BE COVERED BY U.S. AND FOREIGN AND/OR PATENTS PENDING.

THIS DRAWING IS UNPUBLISHED
~~RELEASED FOR PUBLICATION ,19~~

AMP — AMP HOLLAND B.V. 's-Hertogenbosch, The Netherlands.

NAME: PIN MATE-N-LOK.

DR.: J.v.LIEMPT	CHK.: A.BIJNEN.	APP.: M.v.DRIEL	DWG.No. C-163305		REV.LTR. C	SHEET 1 OF 1	A3
DATE: 24 OCT 96	DATE: -	DATE: -					

R6-210 (REV.04-91)