DRAWING MADE IN AMERICAN PROJECTION

1 MATES WITH HOUSING 480708.
2 PARTS COMPLY WITH AMP SOLDERABILITY SPEC 109-11-3.
3 CONTACT IS PLATED OVERALL WITH .000050 NICKEL, THEN .000030 GOLD OVER CONTACT LENGTH INDICATED AND MATTE TIN ON SOLDER TAIL END.

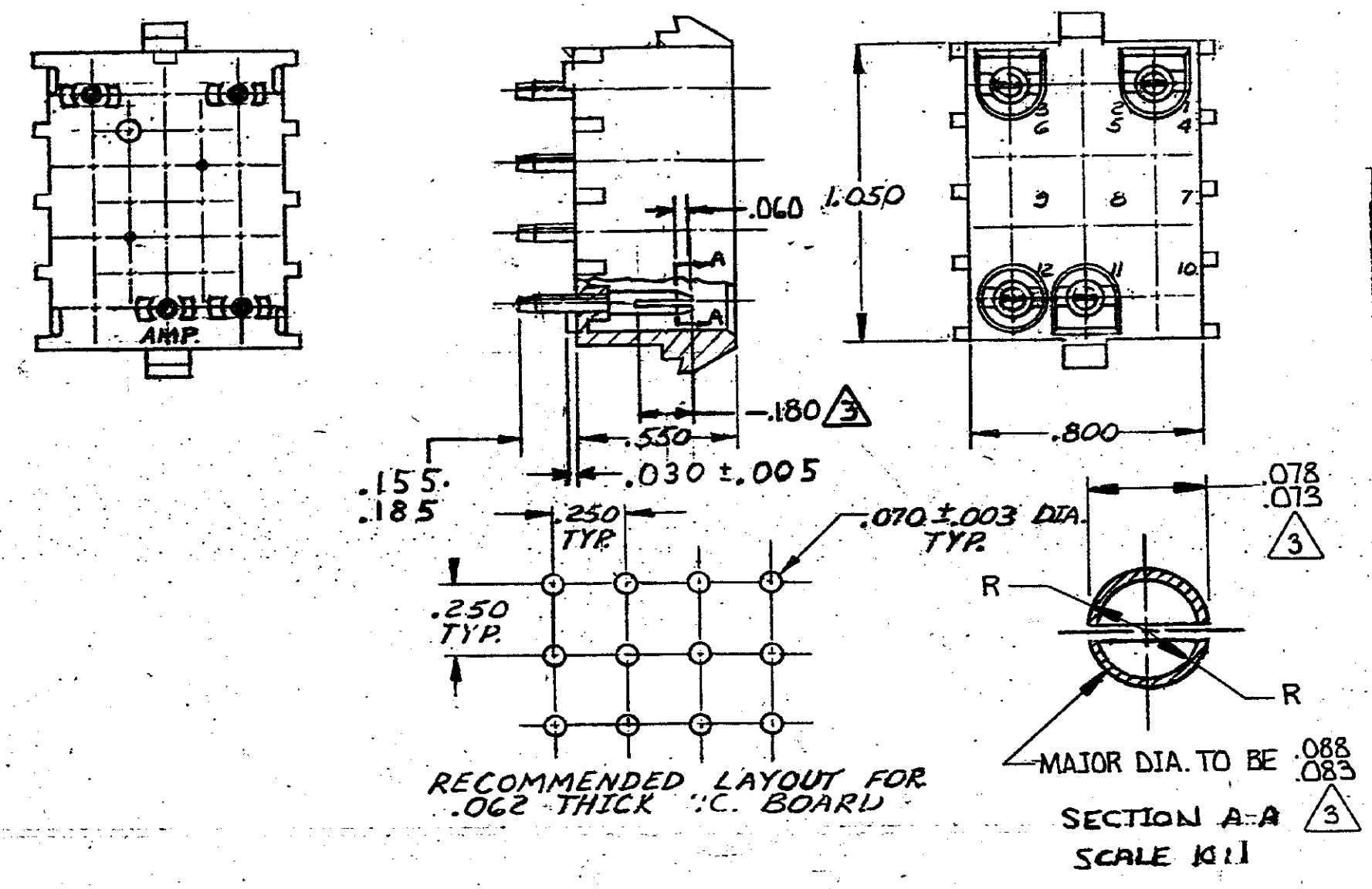

RECOMMENDED LAYOUT FOR .062 THICK P.C. BOARD

ASSEMBLY NO.	HSG. MATL & COLOR	PIN MATL & FINISH
350433-2	NYLON - NATURAL	PH BRZ - GOLD 3
350433-1	NYLON - NATURAL	PH. BRZ - PRE-TIN

LTR	REVISION RECORD	DR	CHK	DATE
U	REV PER EC 0730-4181-93-	LHS	RS	7-2-93
T	REVISED PER CM-3357	PKC	RS	3-12-91
S	REVISED PER CM-2868	PKC	RS	7-12-90
R	REV PER CM 2340	PKC	RS	8-10-89
P	REV PER CM-1520	PH	RS	5-3-88
N	OBS. 3 PER CM-947	PKC	[illegible]	7-14-87
M	OBS. 2-1 & 9-1 PER CM-946	PKC	[illegible]	5-11-87

REQUIRED PER ASSEMBLY

NUMBER

DESCRIPTION

© 1973 BY AMP INCORPORATED. ALL RIGHTS RESERVED. AMP PRODUCTS COVERED BY PATENTS AND/OR PATENTS PENDING.

CUSTOMER COPY REFERENCE ONLY

DR G. Eckman

CHK E. Creamer 6-27-75

DE

APP C. M. Pattonoy 6/29/73

MATERIAL AND FINISH: SEE TABLE

WIRE - RANGE - INSULATION: — / — / —

TOLERANCE EXCEPT AS NOTED ±.015 ±1° 0'

SCALE: —

AMP INCORPORATED HARRISBURG, PENNA

CLASS: —

TYPE: —

LOC CM | B | NO 350433 | REV U

NAME: 12 CIRCUIT MATE-N-LOK™ UNIVERSAL P.C. BOARD HEADER

DIMENSIONS IN INCHES. DO NOT SCALE PRINT.

PRINT DIST 53