Downloaded from Arrow.com.

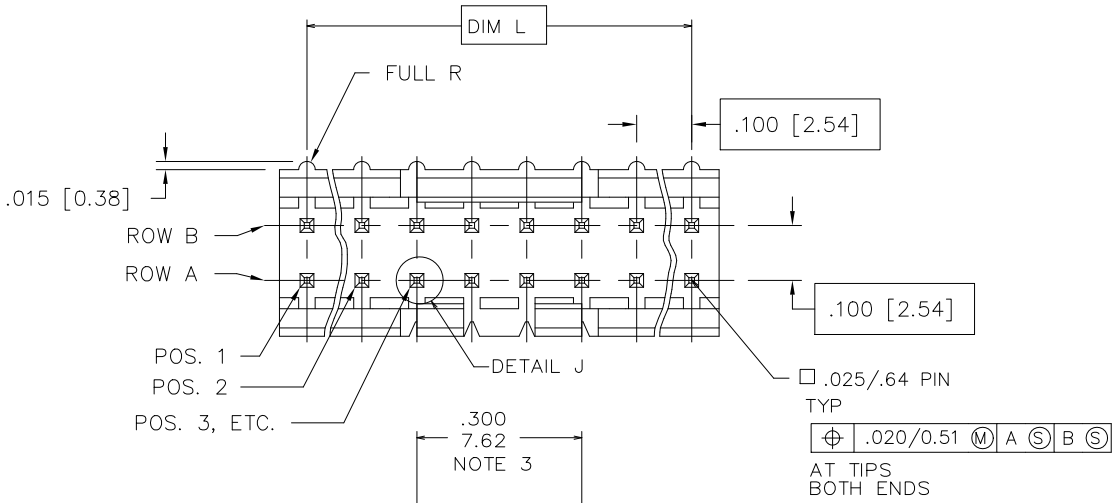

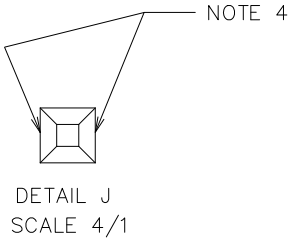

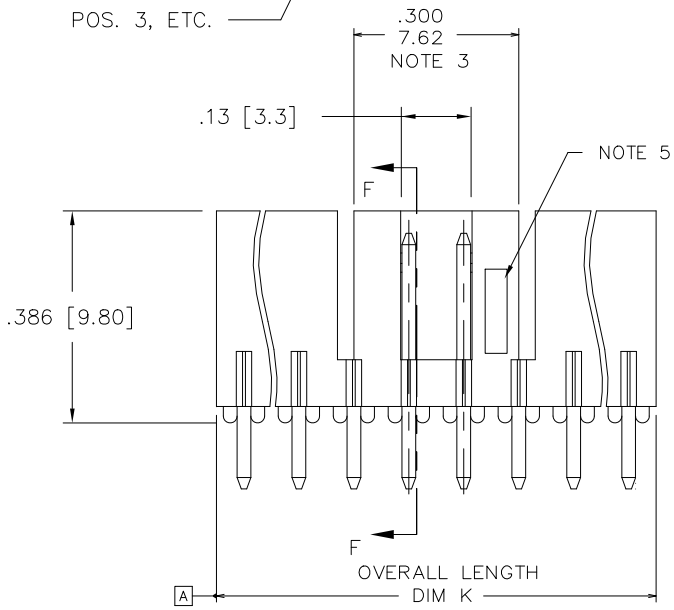

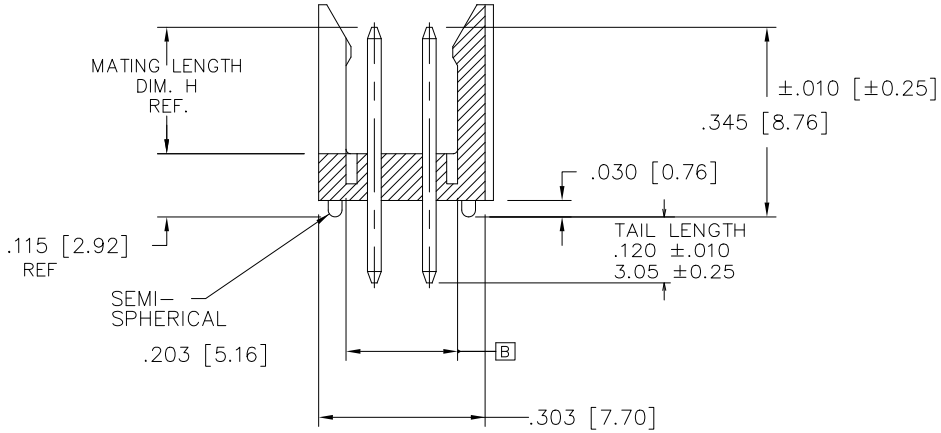

SECTION F–F

PRODUCT NUMBER

69168–X YY X X HLF

- HLF — LEAD FREE OPTION SEE NOTE 7, 8, 9
- X — PACKAGING OPTIONS SEE NOTE 12
- X — A = CUSTOMER SPECIALS SEE NOTE 6
- YY — NO. OF POS. SEE TABLE
- X — PIN PLATING
- 69168 — BASE P/N

Mat'l. code NOTES 1 & 2				surface ISO 1302	tolerance ISO 406 ISO 1101	projection	product family
ltr	ecn no	dr	date	tolerances unless otherwise specified			title FRICTION LATCH HEADER DOUBLE ROW VERTICAL
M	ELX-N-011899	JZ	05/31/12	angles	linear .XX±.01/.X±0.3	inch/mm	
N	ELX-N-37212	M.Z	05/29/20		.XXX±.005/.XX±0.13		
P	ELX-N-41840	M.X	06/08/21	0°±2°	.XXXX±.0020 .XXX±0.051	scale 1:1	
				dr	L.SADERS	5/3/95	dwg no 69168 sheet 1 of 2 size A3
				engr	L.FYE	5/3/95	
				chr	T.BREWBAKER	5/3/95	
				appd	L.FYE	5/3/95	type Product Customer Drawing

sheet index	revision sheet	P 1	P 2

© 2016 AFCI

Downloaded from Arrow.com.

PRODUCT NUMBER	NO.OF POS.	MATING LENGTH DIM H	OVERALL LENGTH DIM K	DIM L	NOTES
69168–X06	2 X 3	0.230/5.84	0.300/7.62	0.200/5.08	
–X08	2 X 4	0.230/5.84	0.400/10.16	0.300/7.62	
–X08A	2 X 4	0.210/5.33	0.400/10.16	0.300/7.62	NOTE 6
–X10	2 X 5	0.230/5.84	0.500/12.70	0.400/10.16	
–X10A	2 X 5	0.210/5.33	0.500/12.70	0.400/10.16	NOTE 6
–X12	2 X 6	0.230/5.84	0.600/15.24	0.500/12.70	
–X14	2 X 7	0.230/5.84	0.700/17.78	0.600/15.24	
–X16	2 X 8	0.230/5.84	0.800/20.32	0.700/17.78	
–X16A	2 X 8	0.210/5.33	0.800/20.32	0.700/17.78	NOTE 6
–X18	2 X 9	0.230/5.84	0.900/22.86	0.800/20.32	
–X18A	2 X 9	0.210/5.33	0.900/22.86	0.800/20.32	NOTE 6
–X20	2 X 10	0.230/5.84	1.000/25.40	0.900/22.86	
–X22	2 X 11	0.230/5.84	1.100/27.94	1.000/25.40	
–X24	2 X 12	0.230/5.84	1.200/30.48	1.100/27.94	
–X26	2 X 13	0.230/5.84	1.300/33.02	1.200/30.48	
–X28	2 X 14	0.230/5.84	1.400/35.56	1.300/33.02	
69168–X30	2 X 15	0.230/5.84	1.500/38.10	1.400/35.56	

PIN PLATING CODES	
–1YY	30u"/.76u (SEE NOTE 10) 50u"/1.27u Ni
–2YY	15u/.38u (SEE NOTE 10) 50u"/1.27u Ni
–3YY	50u"/1.27u (SEE NOTE 10) 50u"/1.27u Ni
–4YY –4YYHLF	100u"/2.54u MIN Sn 50u"/1.27u Ni (SEE NOTE 11)
–5YY	15u"/.38u (SEE NOTE 10) 50u"/1.27u Ni
–6YY	30u"/.76u (SEE NOTE 10) 50u"/1.27u Ni
–7YY	30u"/.76u (SEE NOTE 10) OVER 50u"/1.27u Ni
–8YY	15u"/.38u (SEE NOTE 10) OVER 50u"/1.27u Ni

NOTES:

1. MOLDING MAT'L: GLASS REINFORCED HTN, COLOR: BLACK
   FLAME RETARDANT PER UL 94 V–0
   MAXIMUM OPERATING TEMPERATURE: 130° C OR
   MINERAL FILLED LCP, COLOR BLACK
   FLAME RETARDANT PER UL 94 V–0
2. PIN MATERIAL: 3/4 HD PHOS. BRZ.
3. NO SLOTS ON 2 X 5 POSITION OR SMALLER PRODUCT. THE CENTER KEY SLOT WILL BE ON ALL HEADERS REGARDLESS OF SIZE.
4. TWO NON–CRITICAL SIDES OF PIN TIP NOT PLATED, BOTH ENDS.
5. COMPANY LOGO MAY APPEAR IN THIS AREA.
6. CUSTOMER SPECIAL –– "A" SUFFIX INDICATES 0.210/5.33 MATING LENGTH.
7. ADD "HLF" SUFFIX AT THE END OF PART NUMBER FOR LEAD FREE OPTION, NOT AVAILABLE FOR –5YY, –5YYH, –6YY & –6YYH.
8. PART NUMBERS WITH "H" SUFFIX WILL WITHSTAND EXPOSURE TO 260°C PEAK TEMPERATURE FOR 20 SECONDS IN WAVE SOLDER, INFRA–RED OR VAPOR PHASE SOLDER PROCESS.
   PART NUMBERS WITHOUT "H" SUFFIX WILL WITHSTAND EXPOSURE TO 260°C PEAK TEMPERATURE FOR WAVE SOLDER PROCESS.
9. THIS PRODUCT MEETS EUROPEAN UNION DIRECTIVES AND OTHER COUNTRY REGULATION AS DESCRIBED IN GS–22–008.
10. PLATING OPTIONS:
    PERFORMANCE PLATING WILL BE EITHER GOLD OR GXT ON CONTACT OR TAIL, OPTIONALLY (78~295u"/2~7.5u) TIN ON TAIL.
11. "THIS PRODUCT HAS 100% TIN PLATING IN THE INTERFACE AND HAS NOT BEEN TESTED FOR WHISKER GROWTH IN ALL INTERCONNECT ENVIRONMENTS."
12. PACKAGING OPTIONS:
    NONE = PACKAGED WITH POLY BAGS
    T =PACKAGED IN TAPE AND REEL WITH PICK UP CAP

Mat'l. code NOTES 1 & 2	surface ISO 1302	tolerance ISO 406 ISO 1101	projection
ltr / ecn no / dr / date	tolerances unless otherwise specified		inch/mm
P	angles 0°±2°	linear .XX±.01/.X±0.3 .XXX±.005/.XX±0.13 .XXXX±.0020 .XXX±0.051	scale 1:1
	dr	L.SADERS	5/3/95
	engr	L.FYE	5/3/95
	chr	T.BREWBAKER	5/3/95
	appd	L.FYE	5/3/95

product family

title FRICTION LATCH HEADER DOUBLE ROW VERTICAL

dwg no 69168 sheet 2 of 2 size A3

type Product Customer Drawing

sheet index / revision sheet

© 2016 AFCI