THIS DRAWING IS UNPUBLISHED. RELEASED FOR PUBLICATION - .-
© COPYRIGHT - By - ALL RIGHTS RESERVED.

LOC	DIST
A1	—

REVISIONS

P	LTR	DESCRIPTION	DATE	DWN	APVD
	A13	REVISED PER ECO-11-005150	21MAR11	RK	HMR

CONTACTS FOR FLR AND FLK-CABLE
Kontakte fuer FLR und FLK-Leitung

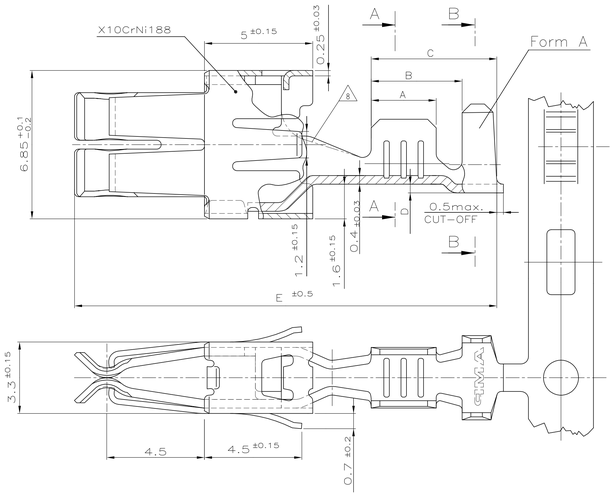

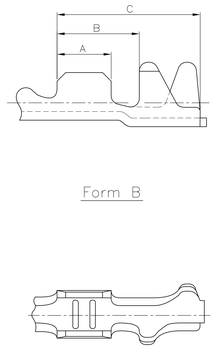

Form B

CONTACTS FOR SINGLE WIRE SEALING SYSTEM: FLR- AND FLK-CABLE
Kontakte fuer Einzel-Dichtung-System: FLR- und FLK-Leitung

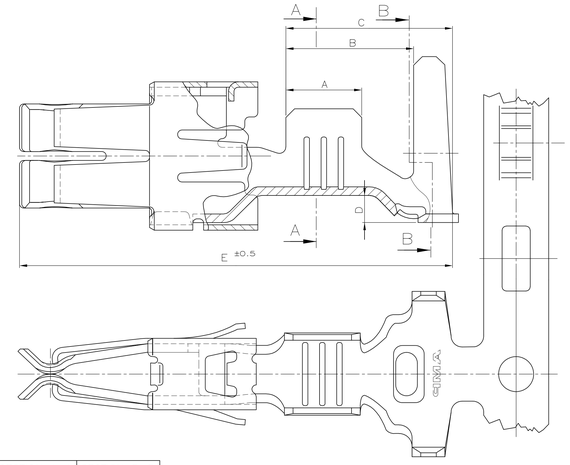

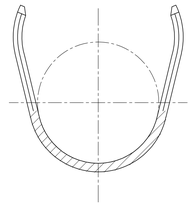

SECTION B-B
Schnitt B-B

ONLY FOR PN: 968035, 968037 and 1670426
Nur fuer PN:

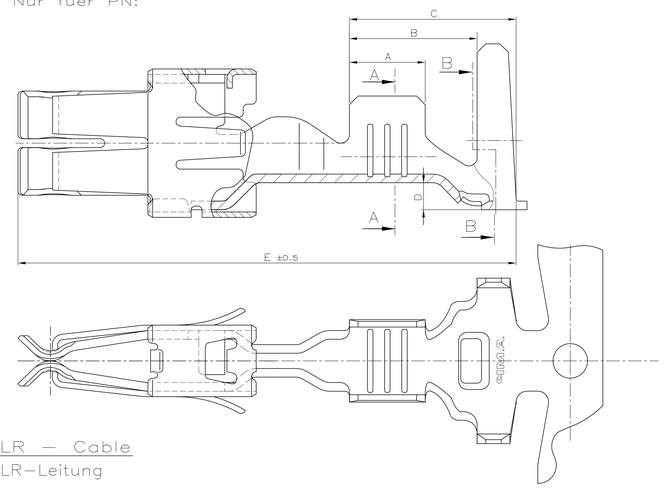

Dimensions see Figure Contacts for FLR – Cable
Masse siehe Darstellung der Kontakte fuer FLR-Leitung

								SECTION A–A Schnitt A–A	SECTION B–B Schnitt B–B	WIRE CRIMP Drahtcrimp	SECTION A–A Schnitt A–A	SECTION B–B Schnitt B–B						
			>4.0–6.0 INCL. AWG 10	3.6–5.1 6.0 (SEAL)			A = 4.3 B = 6.5 C = 8.3 D=1.45 E = 20.0	E = 5.3 G = 5.6 D_{Dr} = 2.9	H = 8.15 K = 8.0 D_{iso} = 6.0	5.0mm² =2.36 6.0mm² =2.55 PRELIMINARY vorlaeufig	E = 5.3 G = 5.6 D_{Dr} = 2.9							
1–1670426–6	A	1–1670427–6			CuNiSi	7												
2–968037–4	A	2–968038–4	>2.5–4.0	3.4–3.7 2	CuSn4	5	A = 4.0 B = 5.9 C = 7.7 D=1.25 E = 23.0	E = 4.6 G = 4.8 D_{Dr} = 2.4	H = 7.6 K = 7.7 D_{iso} = 5.6	4.0mm² =2.35 3.0mm² =2.13 —	E = 3.6 G = 4.95 D_{Dr} = 1.7	H = 7.0 K = 6.9 R = 4.1						
1–968037–4	A	1–968038–4			CuFe2	sel.Gold 3												
0–968037–2	A	0–968038–2			CuSn4	vorverzinnt												
2–968035–4	A	2–968036–4	>1.0–2.5	2.7–3.7 2	CuSn4	5	A = 3.5 B = 5.9 C = 7.7 D=1.25 E = 23.0	E = 3.8 G = 4.1 D_{Dr} = 1.6	H = 7.6 K = 7.7 D_{iso} = 5.6	1.5mm² =1.76 2.0mm² =1.90 2.5mm² =2.04	E = 3.1 G = 4.2 D_{Dr} = 2.4	H = 7.0 K = 6.9 D_{iso} = 4.1						
—	—	—			—	—												
0–968035–2	A	0–968036–2			CuSn4	vorverzinnt												
—	—	—	>2.5–4.0	3.4–4.5 2	—	—	A = 4.0 B = 5.9 C = 7.7 D=1.25 E = 20.0	E = 4.6 G = 4.8 D_{Dr} = 2.4	H = 7.8 K = 7.8 D_{iso} = 5.7	3.0mm² =2.13 4.00mm² =2.35 —	E = 3.6 G = 4.93 D_{Dr} = 2.3	H = 7.5 K = 6.8 D_{iso} = 4.6						
1–964334–5	A	1–964333–5			CuFe 2	6												
1–964334–1	A	1–964333–1			CuFe 2	vorverzinnt												
1–964332–5	A	1–964331–5	>1.0–2.5	2.2–3.7 2	CuFe 2	6	A = 3.5 B = 5.9 C = 7.7 D=1.25 E = 20.0	E = 3.8 G = 4.0 D_{Dr} = 1.7	H = 7.8 K = 7.8 D_{iso} = 5.7	1.5mm² =1.76 2.0mm² =1.90 2.5mm² =2.04	E = 3.1 G = 4.2 D_{Dr} = 1.7	H = 7.5 K = 6.8 D_{iso} = 4.6						
964332–5	A	964331–5			CuFe 2	4												
1–964332–2	A	1–964331–2			CuFe 2	sel.Gold 3												
1–964332–1	A	1–964331–1			CuFe 2	vorverzinnt												
—	—	—	0.5–1.0	1.4–2.7 2	—	—	A = 3.0 B = 5.4 C = 7.2 D=1.25 E = 20.0	E = 2.8 G = 3.0 D_{Dr} = 1.1	H = 7.7 K = 7.7 D_{iso} = 5.5	0.5mm² =1.43 0.75mm² =1.52 1.0mm² =1.61	E = 2.2 G = 3.1 D_{Dr} = 1.1	H = 7.0 K = 6.8 D_{iso} = 4.1						
1–964330–2	A	964329–2			CuFe 2	sel.Gold 3												
1–964330–1	A	964329–1			CuFe 2	vorverzinnt												
1–969044–5	A	1–969045–5	>2.5–4.0	3.4–4.5 2	CuFe 2	6	A = 4.0 B = 5.9 C = 7.7 D=1.45 E = 20.0	E = 4.6 G = 4.8 D_{Dr} = 2.4	H = 8.15 K = 8.0 D_{iso} = 6.0	4.00mm² =2.35 — —	E = 3.6 G = 4.93 D_{Dr} = 2.3	H = 7.5 K = 6.8 D_{iso} = 4.6						
969044–5	A	969045–5			CuFe 2	4												
969044–1	A	969045–1			CuFe 2	vorverzinnt												
—	—	—	>1.0–2.5	2.2–3.7 2	—	—	A = 3.5 B = 5.9 C = 7.7 D=1.45 E = 20.0	E = 3.8 G = 4.0 D_{Dr} = 1.7	H = 8.15 K = 8.0 D_{iso} = 5.7	2.5mm² =2.04 2.0mm² =1.90 1.5mm² =1.76	E = 3.1 G = 4.2 D_{Dr} = 1.7	H = 7.5 K = 6.8 D_{iso} = 4.6						
—	—	—			—	—												
969042–1	A	969043–1			CuFe 2	vorverzinnt												
—	—	—	0.5–1.0	1.4–2.7 2	—	—	A = 3.0 B = 5.4 C = 7.2 D=1.35 E = 20.0	E = 2.8 G = 3.0 D_{Dr} = 1.1	H = 7.85 K = 7.7 D_{iso} = 5.5	1.0mm² =1.61 0.75mm² =1.52 0.5mm² =1.43	E = 2.2 G = 3.1 D_{Dr} = 1.1	H = 7.0 K = 6.8 D_{iso} = 4.1						
—	—	—			—	—												
969040–1	A	969041–1			CuFe 2	vorverzinnt												
—	—	—	>2.5–4.0	3.3–4.5	—	—	A = 4.0 B = 5.2 C = 6.8 D = 0.6 E = 19.5	E = 4.6 G = 4.8 D_{Dr} = 2.4	H = 6.4 K = 6.7 D_{iso} = 4.0 Form A	3.0mm² =2.13 3.5mm² =2.24 4.00mm² =2.35	E = 3.6 G = 4.95 D_{Dr} = 2.3	H = 5.5 K = 5.7 D_{iso} = 3.1						
964328–5	A	964327–5			CuFe 2	4												
964328–1	A	964327–1			CuFe 2	vorverzinnt												
A4 964326–5	B	964325–5	>1.0–2.5	2.2–3.0	CuFe 2	4	A = 3.5 B = 4.7 C = 6.3 D = 0.4 E = 19.5	E = 3.8 G = 4.0 D_{Dr} = 1.7	H = 4.7 K = 4.9 D_{iso} = 2.6 Form A	1.5mm² =1.76 2.0mm² =1.90 2.5mm² =2.04	E = 3.1 G = 4.2 D_{Dr} = 1.7	H = 3.8 K = 4.4 D_{iso} = 2.3						
—	—	—			—	—												
964326–1	B	964325–1			CuFe 2	vorverzinnt												
—	—	—	0.5–1.0	1.4–2.1	—	—	A = 3.0 B = 4.2 C = 5.8 D = 0.4 E = 19.5	E = 2.8 G = 3.0 D_{Dr} = 1.1	H = 3.8 K = 4.1 D_{iso} = 1.8 Form A	0.5mm² =1.43 0.75mm² =1.52 1.0mm² =1.61	E = 2.2 G = 3.1 D_{Dr} = 1.1	H = 3.1 K = 3.7 D_{iso} = 1.8						
—	—	—			—	—												
964324–1	A	964323–1			CuFe 2	vorverzinnt												
—	—	—	0.2–0.5	1.15–1.6	—	—	A = 2.5 B = 3.8 C = 6.6 D = 0.3 E = 19.5	E = 2.2 G = 2.2 D_{Dr} = 0.8	H = 3.1 K = 3.1 D_{iso} = 1.4 Form B	0.2mm² =1.13 0.25mm² =1.15 0.35mm² =1.19 0.5mm² =1.26	E = 2.0 G = 2.3 D_{Dr} = 0.8	H = 2.5 K = 2.7 D_{iso} = 1.4						
—	—	—			—	—												
964322–1	A	964321–1			CuFe 2	vorverzinnt												
ORDER NO. BESTELL- NR. STRIP BANDWARE	Rev.	ORDER NO. BESTELL- NR. LOOSE PIECE Einzelaus-fuehrung	WIRE RANGE Drahtgroessen Bereich (mm²)	INSULATION ∅ Isolations ∅ (mm)	MATERIAL Werkstoff	SURFACE Oberfläche	LENGTH Laenge	STRIP FORM: WIRE CRIMP Drahtcrimp Bandware	STRIP FORM: INSUL.-CRIMP Isol.-Crimp Bandware	CRIMP HEIGHT Crimp-Höhe	LOOSE PIECE: WIRE CRIMP Drahtcrimp Einzelausführung	LOOSE PIECE: INSUL.-CRIMP Isol.-Crimp Einzelausführung						
							CRIMP DIMENSIONS (mm) Crimpabmessungen (mm)											

SINGLE WIRE SEALING SYSTEM EDS 1	CERTILOCK:	HAND TOOL (Handzange) INSERT (Matrize)	169400–1	539616–1	ERGOCRIMP:	HAND TOOL (Handzange) INSERT (Matrize)	539635–1 539666–2
FLR/FLK	CERTILOCK:	HAND TOOL (Handzange) INSERT (Matrize)	169400–0	539615–1	ERGOCRIMP:	HAND TOOL (Handzange) INSERT (Matrize)	539635–1 539665–2
FLR-CABLE / Leitung							

ORDER NO. BESTELL- NR. TOOL INSERT Handzange/Matrize LOOSE PIECE fuer Einzelausfuehrung	ORDER NO. BESTELL- NR. EXTRACTION TOOL Ausdrueckwerkzeug	CRIMP DATA AND CRIMP TOOL Crimpdaten u. Crimpwerkzeuge
968 107–1	SEE APPLICATION SPECIFICATION siehe Verarbeitungsspezifikation 114–18037	

ONLY FOR PN: 964330, 964332, 964334, 968035 and 968037
Nur fuer PN:

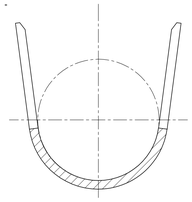

SECTION B-B
Schnitt B-B

CARRIERSTRIP
Trägerstreifen

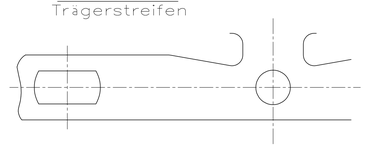

NOTES
Bemerkungen

1. ACCORDING INSULATION ∅ IS TO CHOOSE THE SINGLE WIRE SEAL
ATTENTION:DIFFERENT HOUSING CAVITY DIAMETER ARE POSSIBLE,
PLEASE NOTICE APPROPRIATE HOUSING PRODUCT SPECIFICATION!
Entsprechend dem Isolationsdurchmesser ist die Einzel-Dichtung auszuwählen
Achtung:Verschiedene Gehäuse-Kammer-Durchmesser möglich, bitte entsprechende Gehäuse-Produkt-Spezifikation beachten!

2. ADDITIONAL CUSTOMER-SPECIFIC SEAL EXISTING
Weitere kundenspezifische Einzeldichtung vorhanden

3. BODY ELECTRO TIN PLATED OVER NICKEL — 0.2 µm min.
Kontaktkörper gal. verzinnt über Nickel
CONTACT AREA SELECTIV GOLD OVER NICKEL — 0.8 µm min.
Kontaktzone selectiv vergoldet über Ni
WIRE CRIMP AREA ELECTRO TIN PLATED OVER NICKEL — 1 µm min.
Drahtcrimpbereich galv. verzinnt über Nickel

4. CONTACT ZONE SELECTIVE PRE SILVER PLATED MIN.1–1.5µm
Kontaktzone selektiv vorversilbert min. 1–1.5µm

5. CONTACT BODY: ELECTRO TIN PLATED OVER NICKEL — 0.2 µm min.
Kontaktkoerper: gal. verzinnt ueber Nickel
TOUCHING AREA TO CANTILEVER SPRING:
SELECTIVE AU PLATED OVER NICKEL — 0.8 µm min.
Anlageflaeche zur Ueberfeder: selektiv Au ueber Ni beschichtet
CANTILEVER SPRING: COMPLETELY AU PLATED — 0.6 µm min.
Ueberfeder: komplett Au beschichtet

6. CONTACT ZONE SELECTIVE PRE SILVER PLATED MIN.3–4.5µm
Kontaktzone selektiv vorversilbert min. 3–4.5µm

7. 1–3µm Sn28M LAYER FOR HIGHER TEMPERATURE REQUIREMENTS
1–3µm Sn28M Schicht fuer Hoehere Temperaturanforderungen

8. TRANSITION ONLY FOR PN 964325 AND 964326
Uebergang nur fuer PN 964325 und 964326

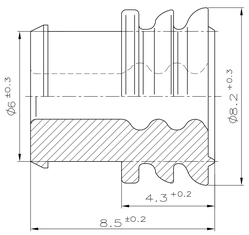

SINGLE WIRE SEAL Einzel-Dichtung 1		
963245–1	3.4–3.7	YELLOW gelb
963244–1	2.2–3.0	WHITE weiß
963243–1	1.2–2.1	BLUE blau
100132–1	DEAD END PLUG	BLACK schwarz
967011–1	3.6–4.3	GREEN gruen
968043–1	4.3–5.1	RED rot
ORDER NO. BESTELL- NR.	INSULATION ∅ Isolations ∅	COLOUR Farbe

CUSTOMER PART NO	PART NO	REV.	PCS.	MATERIAL	SURFACE COLOR	DESCRIPTION	ITEM NO
–	–	–	–	–	–	–	–
–	–	–	–	–	–	–	–
–	–	–	–	–	–	–	–
–	–	–	–	–	–	siehe Tabelle	–

THIS DRAWING IS A CONTROLLED DOCUMENT.
DIMENSIONS: mm
GENERAL TOLERANCE ACCORDING TO DIN 7168 ALLGEMEINTOLERANZEN
0 PLC ± –
1 PLC ± 0.2mm
2 PLC ± –
3 PLC ± –
4 PLC ± –
ANGLE/WINKEL ± –
MATERIAL –
FINISH –

DWN	M.Pfeilschifter	18-MAY-00
CHK	V. Huhn	18-MAY-00
APVD	M. Bleicher	18-MAY-00
PRODUCT SPEC	108-18025	
APPLICATION SPEC	114-18037	
WEIGHT	–	

TE Connectivity

NAME: STANDARD POWER TIMER CONTACT TYP A

SIZE	CAGE CODE	DRAWING NO	RESTRICTED TO
A0	00779	C-1355049	–
CUSTOMER DRAWING	SCALE 10:1	SHEET 1 OF 1	REV A13

4809 (3/11)