Copyright FCI.

PRODUCT NUMBER
20020012-XXXXXXXLF

20020012- □ □ □ □ □ 0 □ LF

PITCH

C: 3.50mm
D: 3.81mm
G: 5.00mm
H: 5.08mm

POLES

02: 2 POLES
03: 3 POLES
04: 4 POLES
24: 24 POLES

LF : DENOTED RoHS COMPATIBLE

1 : STANDARD PRODUCT W/ BOX PACKING

SCREW CODE

CODE	SCREW TYPE		AVAILABILTY
A	-/+	⊕	ON REQUEST ONLY
B	-	⊖	STANDARD

ALL FLANGE SCREWS ARE ONLY AVAILABLE IN +/- COMBINATION SCREW TYPES.

HOUSING CODE

CODE	COLOR	AVAILABILTY
1	GREEN(RAL 6018/T)	STANDARD
2	BLACK	ON REQUEST ONLY
3	GREY(RAL 7004/P)	ON REQUEST ONLY
4	BLUE(RAL 5015/A)	ON REQUEST ONLY

PROPERTY TABLE					
FCI SERIES NAME			03-350	03-381	03-500	03-508
PITCH (mm)			3.50	3.81	5.00	5.08
VOLTAGE RATING (VAC)			300	300	300	300
CURRENT RATING (A)			10	10	10	10
APPLICABLE WIRE RANGE (AWG)		1-WIRE	16~28	16~28	12~22	12~22
		2-WIRE	20	20	18	18
WIRE CROSS SECTION (mm^2)	SOLID	1-WIRE	1.5	1.5	2.5	2.5
		2-WIRE	0.5	0.5	1.0	1.0
	STRANDED	1-WIRE	1.5	1.5	2.5	2.5
		2-WIRE	0.75	0.75	1.5	1.5
OPENING CONTACT HOUSING(mm^2)			1.8x2.4	1.8x2.4	2.6x2.8	2.6x2.8
WIRE STRIP LENGTH(mm)			6~7	6~7	6~7	6~7
TORQUE +/- 10% (N-m/Lb-in)			0.19/1.7	0.19/1.7	0.4/3.5	0.4/3.5
SCREW			M2x0.4	M2x0.4	M2.5x0.4	M2.5x0.4
WITHSTANDING VOLTAGE (kV)			1.6	1.6	1.6	1.6
OPERATING TEMP. (℃)			-40~+115	-40~+115	-40~+115	-40~+115
POLES AVAILABLE			02~24	02~24	02~24	02~24
SAFETY CERTIFICATE			c FW us		c FW us	

NOTES:
1. MATERIALS
   1-1 HOUSING: THERMALPLASTIC RESIN, UL 94V-0 RATED.
   1-2 SCREW: STEEL, ZINC PLATED.
   1-3 CLAMP: COPPER ALLOY, NICKEL PLATED.
   1-4 TERMINAL: COPPER ALLOY, TIN PLATED.
2. PRODUCT SPECIFICATION REFER TO FCI GS-12-625.
3. PRODUCT PACKING SPECIFICATION REFER TO FCI GS-14-1394.
4. FCI, SAFETY CERTIFICATE LOGO AND SERIES NAME TO BE SHOWN ON PRODUCT SURFACE.
5. THE PRODUCTS WHERE THE PART NUMBER END IN "LF" MEET THE EUROPEAN UNION DIRECTIVE AND OTHER COUNTRY REGULATIONS AS DESCRIBED IN GS-22-008.

ltr	ecn no	dr	date
A	T10-0082	WL	080810
B	T10-0158	WL	100410
C	T10-0180	WL	111510
D	T10-0186	WL	120810
E	T11-0006	WL	012611
F	T-005908	WL	091311

sheet index	revision	F F F F F F
	sheet	1 2 3 4 5

mat'l. code

surface ASME Y14.5 | tolerance ASME Y14.5

tolerances unless otherwise specified

angles X°±1° | linear X.±0.5 | X.X±0.3 | X.XX±0.1

projection

MM [INCH]

scale

dr	WENDY CHEN	051810
engr	JASON HSU	051810
chr	GARY HSIEH	051810
appd	JOSEPH HSIA	051810

product family: TERMINAL BLOCK

title: TERMINAL BLOCK
PLUGGABLE, PLUG, SIGNAL, W/FLANGE
FRONT SCREW

dwg no: 20020012 | sheet 1 of 5 | size: A4

type: CUSTOMER Drawing

Copyright FCI.

PRODUCT NUMBER	SERIES NAME	PITCH
20020012-CXXXXXXLF	03-350	3.50 mm

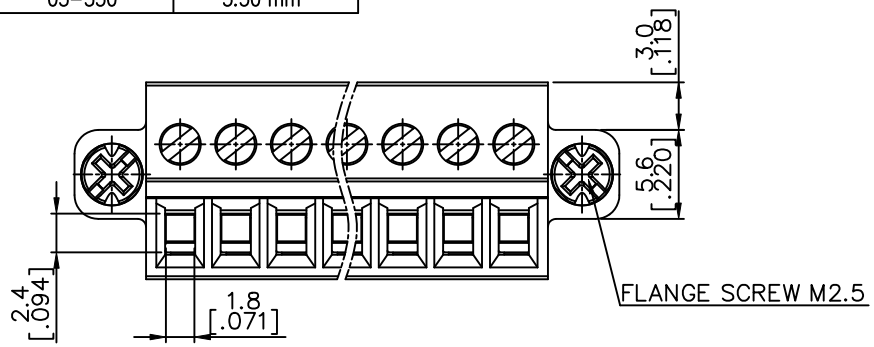

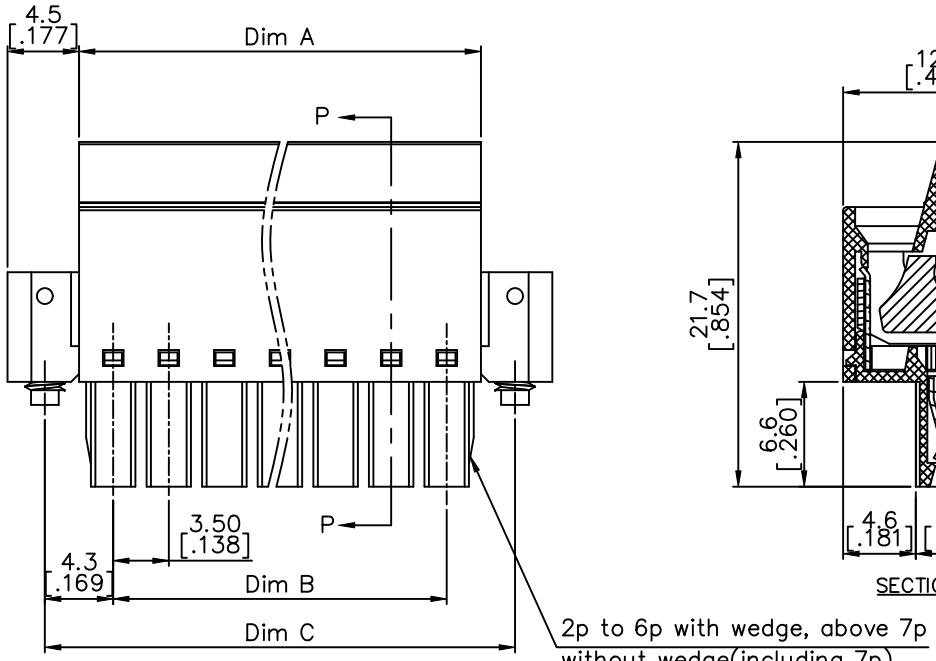

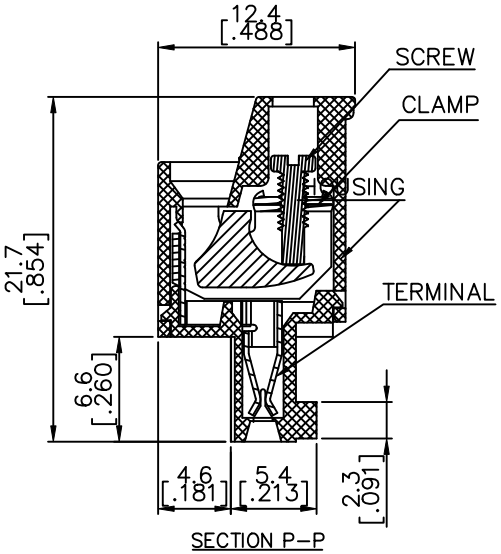

N = Number of poles
Dim A=Nx3.5[.138]+0.80[.031]
Dim B=(N-1)x3.5[.138]
Dim C=(N-1)x3.5[.138]+8.6[.339]

Poles	Dim A	Dim B	Dim C
2-4p	±0.10[.004]		±0.15[.006]
5-7p	±0.15[.006]		±0.20[.008]
8-12p	±0.20[.008]		±0.25[.010]
13-18p	±0.25[.010]		±0.30[.012]
19-24p	±0.30[.012]		±0.40[.016]

mat'l. code				surface ASME Y14.5	tolerance ASME Y14.5	projection	product family: TERMINAL BLOCK
ltr	ecn no	dr	date	tolerances unless otherwise specified			title: TERMINAL BLOCK PLUGGABLE, PLUG, SIGNAL, W/FLANGE FRONT SCREW
F				angles	linear X.±0.5 / X.X±0.3 / X.XX±0.1	MM [INCH]	
				X°±1°		scale	
				dr	WENDY CHEN	051810	dwg no 20020012 sheet 2 of 5 size A4
				engr	JASON HSU	051810	
				chr	GARY HSIEH	051810	
				appd	JOSEPH HSIA	051810	type: CUSTOMER Drawing
sheet index	revision sheet						

Copyright FCI.

FCIconnect.com

PRODUCT NUMBER	SERIES NAME	PITCH
20020012-DXXXXXXLF	03-381	3.81 mm

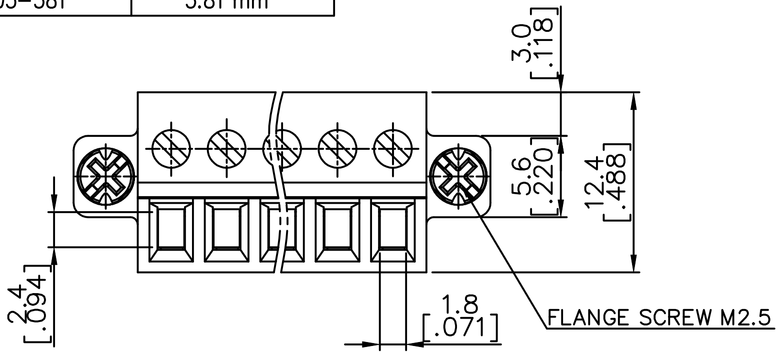

N = Number of poles
Dim A=Nx3.81[.150]+0.80[.031]
Dim B=(N−1)x3.81[.150]
Dim C= Nx3.81[.150]+9.6[.378]
Dim D= (N−1)x3.81[.150]+9.0[.354]

Poles	Tolerance
2−6p	±0.15[.006]
7−11p	±0.20[.008]
12−17p	±0.25[.010]
18−24p	±0.30[.012]

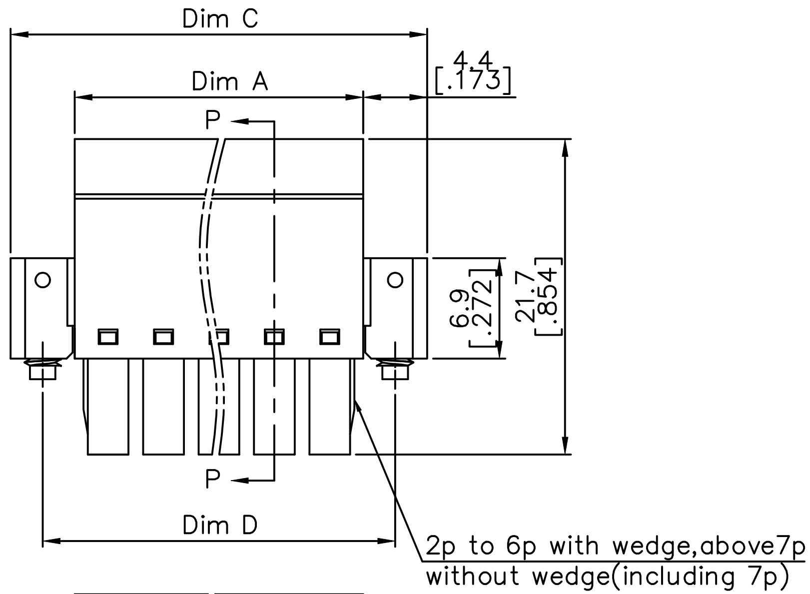

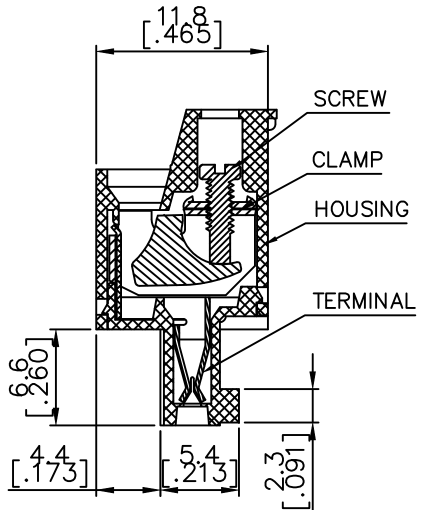

SECTION P−P

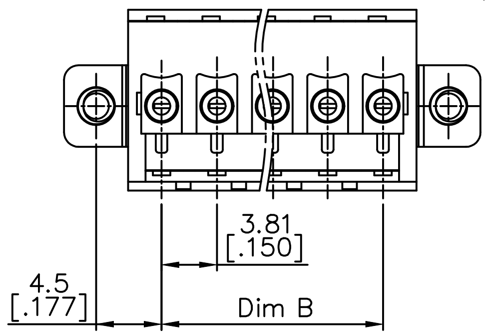

mat'l. code	surface ASME Y14.5	tolerance ASME Y14.5	projection	product family: TERMINAL BLOCK
ltr: F / ecn no / dr / date	tolerances unless otherwise specified: angles X°±1°; linear X.±0.5, X.X±0.3, X.XX±0.1		MM [INCH]; scale	title: TERMINAL BLOCK PLUGGABLE, PLUG, SIGNAL, W/FLANGE FRONT SCREW
	dr WENDY CHEN 051810			dwg no 20020012; sheet 3 of 5; size A4
	engr JASON HSU 051810			
	chr GARY HSIEH 051810			
	appd JOSEPH HSIA 051810			type CUSTOMER Drawing
sheet index	revision sheet			

Copyright FCI.

FCIconnect.com

PRODUCT NUMBER	SERIES NAME	PITCH
20020012-GXXXXXXLF	03-500	5.00 mm

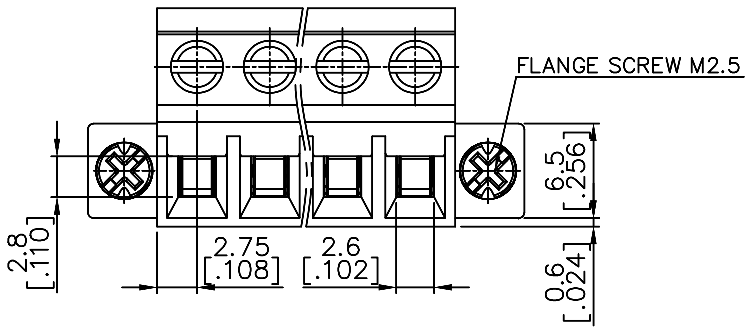

N = Number of poles
Dim A= Nx5.0[.197]+0.5[.020]
Dim B= (N−1)x5.0[.197]
Dim C= Nx5.0[.197]
Dim D= (N+1)x5.0[.197]
Dim E= (N+2)x5.0[.197]

Poles	Tolerance
2−7p	±0.15[.006]
8−12p	±0.25[.010]
13−18p	±0.30[.012]
19−24p	±0.40[.016]

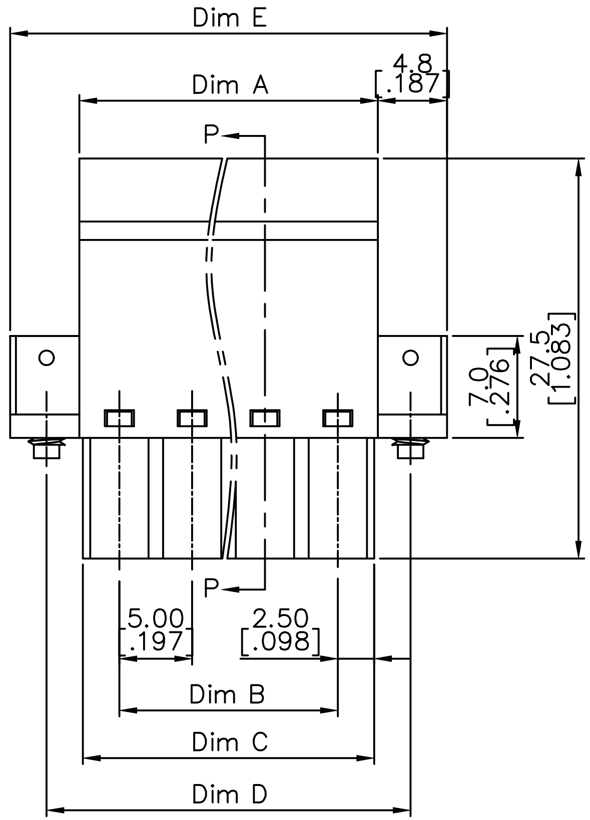

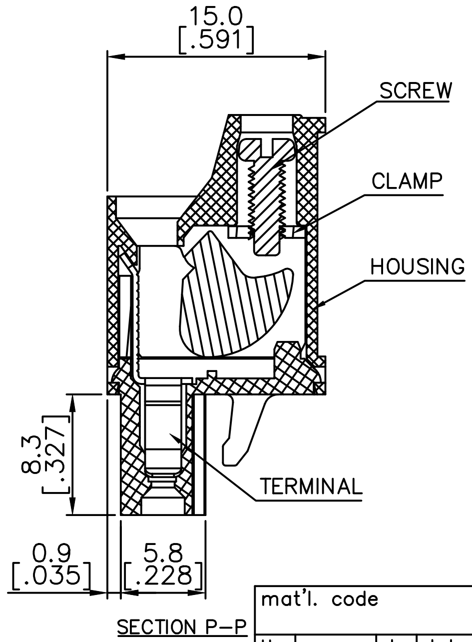

SECTION P−P

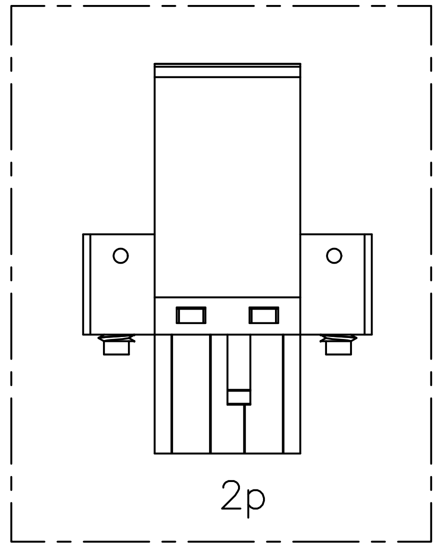

mat'l. code				surface ASME Y14.5	tolerance ASME Y14.5	projection	product family TERMINAL BLOCK
ltr	ecn no	dr	date	tolerances unless otherwise specified			title
F				angles	linear X.±0.5	MM [INCH]	TERMINAL BLOCK PLUGGABLE, PLUG, SIGNAL, W/FLANGE FRONT SCREW
					X.X±0.3		
				X°±1°	X.XX±0.1	scale	
				dr	WENDY CHEN 051810		dwg no 20020012 sheet 4 of 5 size A4
				engr	JASON HSU 051810		
				chr	GARY HSIEH 051810		
				appd	JOSEPH HSIA 051810		type CUSTOMER Drawing
sheet index	revision sheet						

Copyright FCI.

FCIconnect.com

PRODUCT NUMBER	SERIES NAME	PITCH
20020012-HXXXXXXLF	03-508	5.08 mm

N = Number of poles
Dim A= Nx5.08[.200]+0.50[.020]
Dim B= (N-1)x5.08[.200]
Dim C= Nx5.08[.200]
Dim D= (N+1)x5.08[.200]
Dim E= (N+2)x5.08[.200]

Poles	Tolerance
2-6p	±0.15[.006]
7-12p	±0.25[.010]
13-18p	±0.30[.012]
19-24p	±0.40[.016]

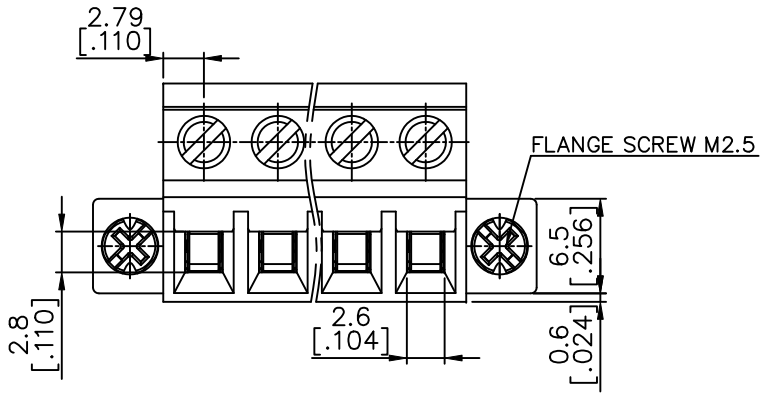

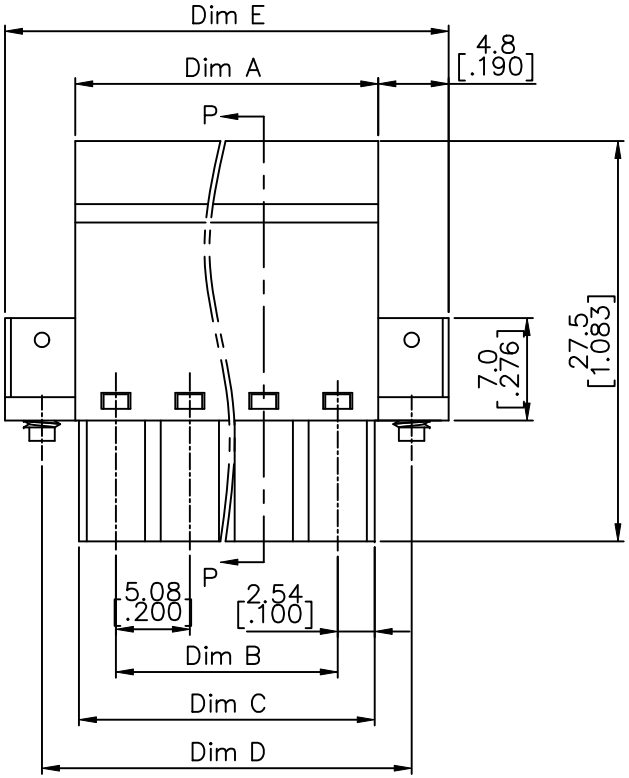

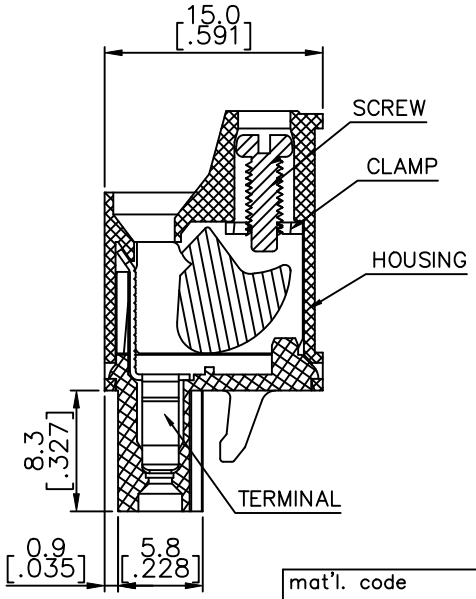

SECTION P-P

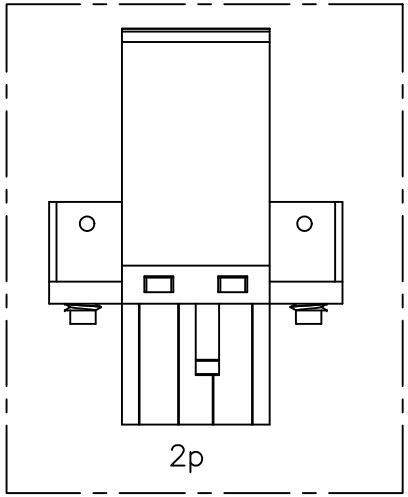

mat'l. code				surface ASME Y14.5	tolerance ASME Y14.5	projection	product family TERMINAL BLOCK
ltr	ecn no	dr	date	tolerances unless otherwise specified			title
F				angles	linear X.±0.5	MM [INCH]	TERMINAL BLOCK PLUGGABLE, PLUG, SIGNAL, W/FLANGE FRONT SCREW
					X.X±0.3		
				X°±1°	X.XX±0.1	scale	
				dr	WENDY CHEN 051810		dwg no 20020012 sheet 5 of 5 size A4
				engr	JASON HSU 051810		
				chr	GARY HSIEH 051810		
				appd	JOSEPH HSIA 051810		type CUSTOMER Drawing
sheet index	revision sheet						

form: A4mmXLc
PDS: Rev :F STATUS:Released Printed: Apr 20, 2012

Mouser Electronics

Authorized Distributor

Click to View Pricing, Inventory, Delivery & Lifecycle Information:

Amphenol:
20020012-H031B01LF 20020012-G021B01LF 20020012-H081B01LF 20020012-H041B01LF 20020012-G031B01LF 20020012-H021B01LF 20020012-G101B01LF 20020012-H061B01LF 20020012-G081B01LF 20020012-G061B01LF 20020012-H101B01LF 20020012-G041B01LF 20020012-H022B01LF 20020012-H032B01LF 20020012-D101A01LF

FCI / Amphenol:
20020012-H181B11LF 20020012-H051B11LF