NO	DESCRIPTION	DATE
1	-65° C TO +102° C ⟶ -40° C TO+70° C	07.04.12'
2	50 OHM ⟶ 75 OHM WORKING VOLTAGE ⟶ VOLTAGE RATING DEL PROOF VOLTAGE	01.07.13'

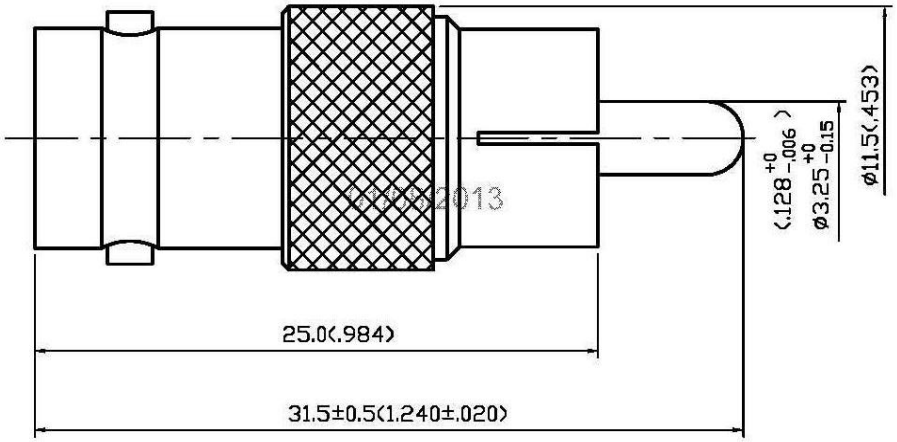

1.0 ELECTRICAL

1.1 FREQUENCY RANGE: 250 MHz
1.2 NOMINAL IMPEDANCE: 75 OHM 2
1.3 VOLTAGE RATING: 500 VOLTS MAX. 2

2.0 MATERIALS

2.1 BODIES: BRASS PER JIS-C3604
2.2 CENTER CONTACT: BRASS PER JIS-C3604
2.3 INSULATION: TEFLON PER ASTM D1457 AND ASTM D1710

3.0 FINISHES AND OTHERS

3.1 SEE BELOW TABLE FOR DETAILS.

4.0 ENVIRONMENTAL

4.1 OPERATING TEMPERATURE RANGE: -40° C TO+70° C 1

NO	DESCRIPTION	MATERIAL	Q'TY	FINISH
5	INSULATION II	TEFLON	1	NONE
4	CENTER CONTACT	BRASS	1	GOLD
3	INSULATION I	TEFLON	1	NONE
2	WASHER	BRASS	1	NICKEL
1	BODY	BRASS	1	NICKEL 100μ" MIN.

APPROVED by _____ DATE: _____

DESCRIPTION	STRAIGHT BNC JACK - RCA PLUG ADAPTER								
製圖	DRAWN: Yoko	TOLERANCE .X	±0.2	品名 TITLE	14-05-2 T.G.N \ROHS COMPLIANT (75Ω)	日期	DATE 05.08.09'	版次	REV. A-2
檢圖	CHECK: Angela	.XX	±0.1	單位	UNIT mm(in)	DWG.NO.	14-0010		
認定	APPROVAL: Angela	.XXX	±0.05	比例	SCALE 4:1				
		ANGLE	±5°						