mikroElektronika
DEVELOPMENT TOOLS - COMPILERS - BOOKS
WEB: www.mikroe.com
FORUM: www.mikroe.com/forum

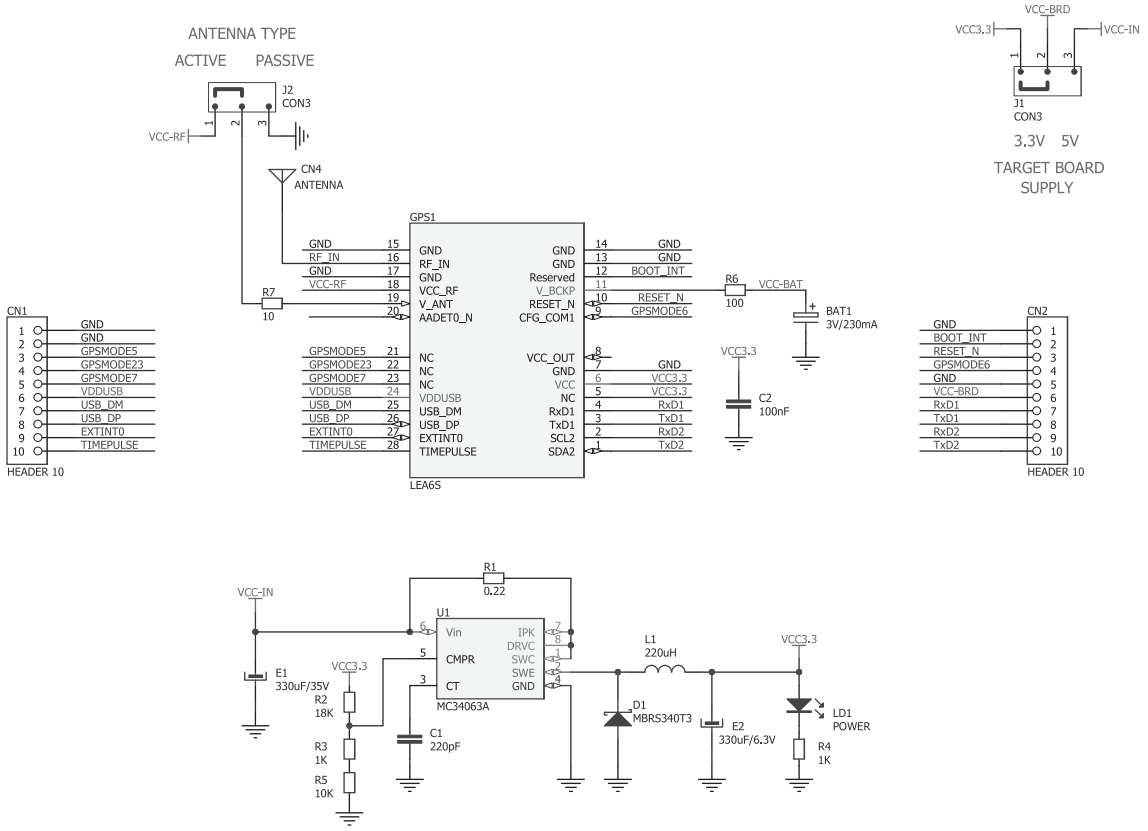

EasyGPS Schematic v101

MikroElektronika Development systems