VOLEX RESERVES THE
RIGHT TO ALTER
NON-CRITICAL DIMENSIONS
WITHOUT NOTICE.

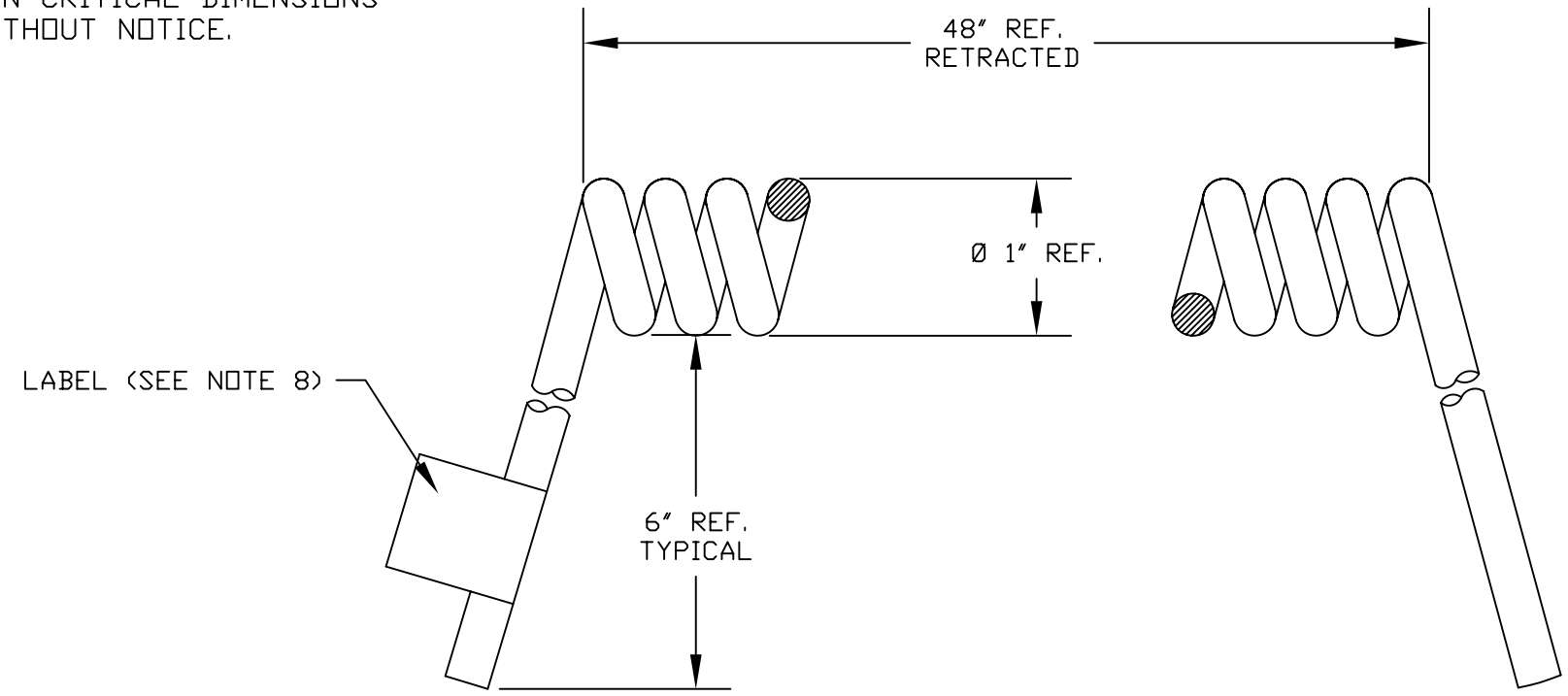

NOTES

1) CORDAGE: 18/3 SVO, 60°C, BLACK OUTER JACKET
2) INSULATED CONDUCTOR INSULATION COLORS WILL BE BLACK, WHITE AND GREEN.
3) APPROVALS: UL/CSA
4) FLAME RATING: FT2
5) CORDAGE O.D. : .275" REF.
6) 25 PCS/CARTON
7) ALL DIMENSIONS IN INCHES UNLESS OTHERWISE NOTED.
8) CORD SET LABEL WILL HAVE VOLEX LOGO AND PART NUMBER.

REV	DESCRIPTION	DATE
3	CHANGE CARTON QTY (WAS 30)	9/6/07
2	ADDED CORD LABEL	8/16/07
1	C.U.D - FIRST ISSUE	8/9/07

Volex
CUD
FORM IN71-07 REV.A

☒ Indianapolis, IN
☐ Conover, N.C.
☐ Freemont, CA
☐ Aguascalientes, MX
☐ Tijuana, Mexico
☐ Hermosillo, MX
☐ Clinton, AR
☐ Kanata, Canada

Proprietary Notice:

This document is the property of Volex Incorporated. The information contained herein is not to be disclosed to anyone without the express written consent of Volex Inc.

MATERIAL: JACKET: RUBBER COLOR: BLACK

FINISH: JACKET: SMOOTH

SCALE: NOT TO SCALE

ECO: N/A

TOLERANCE UNLESS OTHERWISE SPECIFIED
.XXX ± .005
.XX ± .02
.X ± .03
FRACT. ± 1/32
ANGULAR ± 1/2°

ITEM DESCRIPTION: CORDSET - NORTH AMERICAN RETRACTILE (4')

APPROVED	DRAWN BY	DATE:
STC	STC	8/9/07

PART NO. 6479

Mouser Electronics

Authorized Distributor

Click to View Pricing, Inventory, Delivery & Lifecycle Information:

Volex:
6479