REVISIONS		
ISS	ZONE	DESCRIPTION\PER REQUEST\DATE

1. CRIMPED FERRULE
   HEX CRIMP SIZE .128"

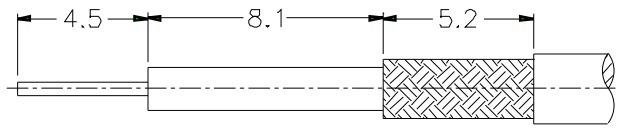

RECOMMENDED
CABLE STRIPPING DIM'S

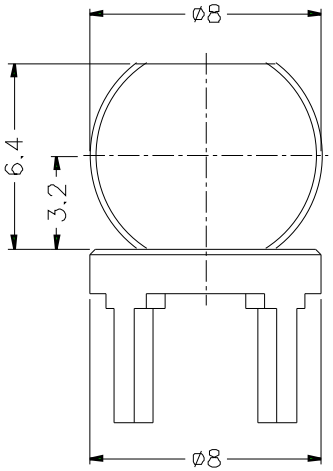

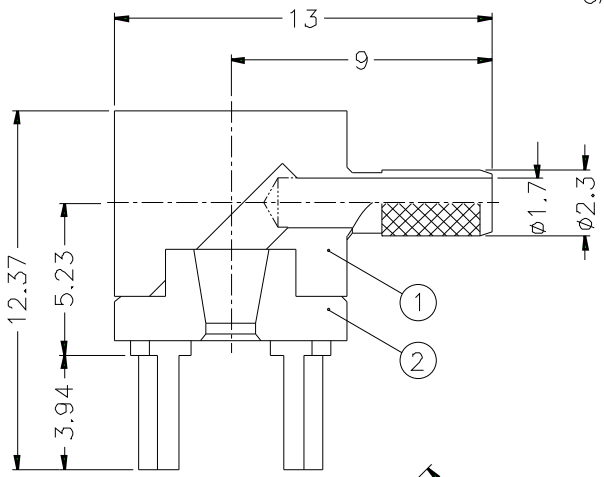

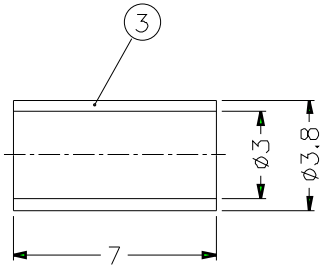

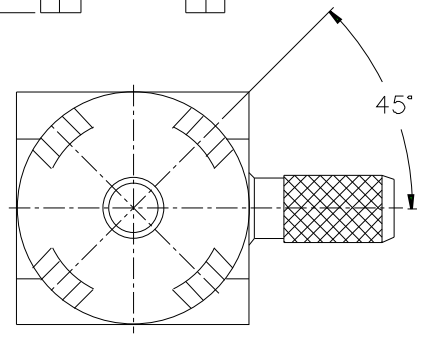

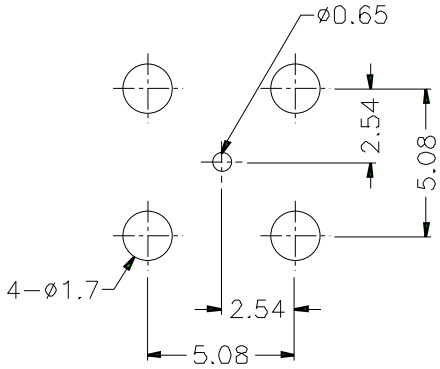

RECOMMENDED
MOUNTING HOLE

NOTES: FINISH (PLATING THICKNESS IN MICRO-INCHES)
1. BRASS PER QQ-B-626
2. GOLD PL. 3 MIN. THICK OVER NICKEL PL. 100 MIN. THICK OVER COPPER STRIKE

NO.	DESCRIPTION	MATERIAL	FINISH	Q'TY	DRAWING NO.
3	FERRULE	COPPER	NOTE 2	1	FR-38/3X7C
2	BODY	NOTE 1	NOTE 2	1	TMN0112U1-2-17
1	BARREL	NOTE 1	NOTE 2	1	TMN0112U1-1-23 /17

DIMENSIONS ARE IN MILLIMETERS

UNLESS OTHERWISE SPECIFIED TOLERANCES
0.5-6 = ±0.2
6-30 = ±0.4
30-120 = ±0.6
120-315 = ±1
315-1000 = ±1.6
1000-2000 = ±2.4

SCALE 4/1 | ISSUE A

PART NO. TMN0112U1-3G-05

APPROVED DATE 10-11-01'

CHECKED DATE 10-11-01'

DRAWN DATE 10-11-01'

FILE NO.

Amphenol

TITLE R/A PCB CABLE TERMINAL (FOR RG-174/U,188A/U,316/U)

DRAWING NO. KJ-TMN0112U1-3G-316U

ITEM NO.