Alle Rechte vorbehalten/ *All rights reserved*

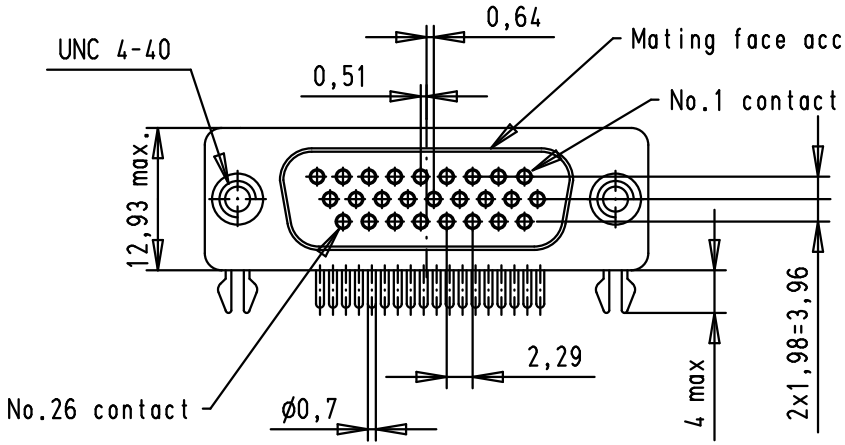

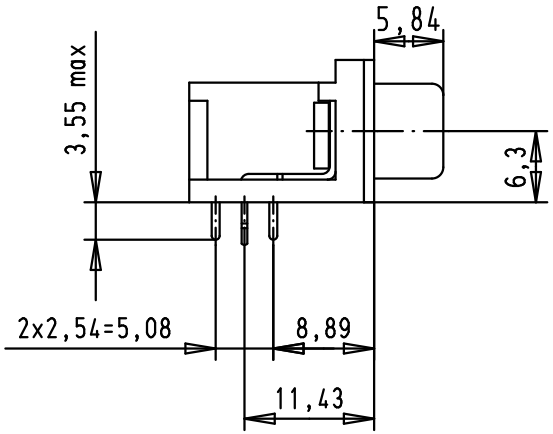

Printed board layout, component side
PCB thickness 1,6

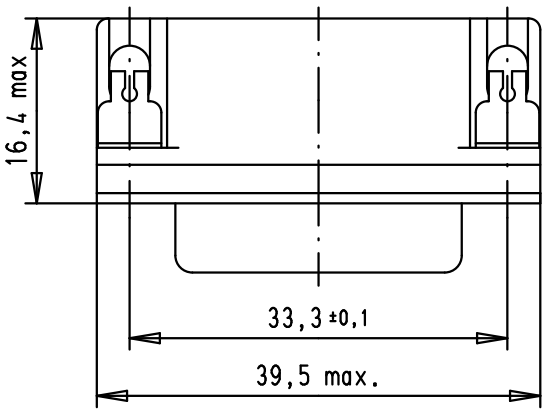

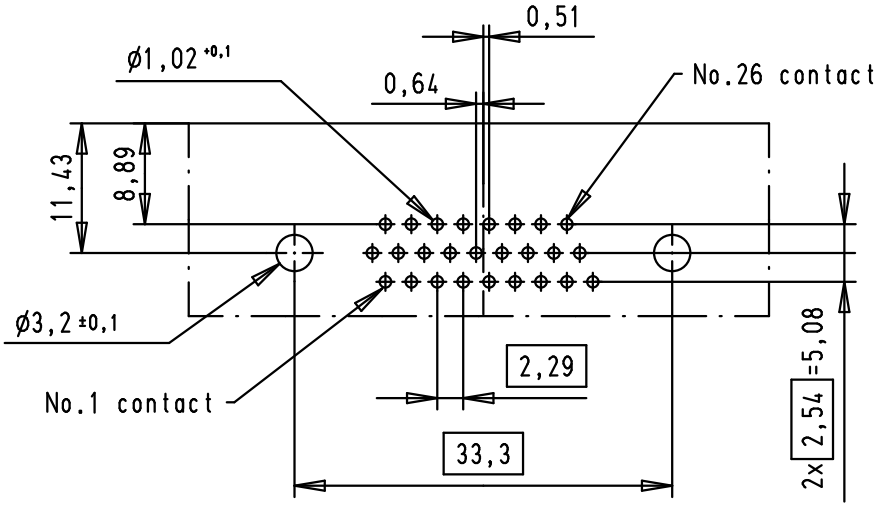

							Dat.	Name	All Dim. in mm Orig. Size DIN A 4	Dsub, 26 poles, female, angled solder pins, board lock	Maßstab/ *Scale*
						Detail.	16-SEP-02	CV			1.5:1
						Insp.					
			36181	12/10/10	BH	Stand.					
09562525612	S4		EC02035	06/07/10	SC	HARTING EURL F-95972 Paris				TB 0956252x612	Blatt/*Page* 1/1
09562527612	PL3		31064	16-SEP-02	CV						
Part number	Performance level		Mod.	Dat.	Name					Sub.	

Mouser Electronics

Authorized Distributor

Click to View Pricing, Inventory, Delivery & Lifecycle Information:

HARTING:
09562525612 09562527612