RoHS Compliant Drawing For Reference Only

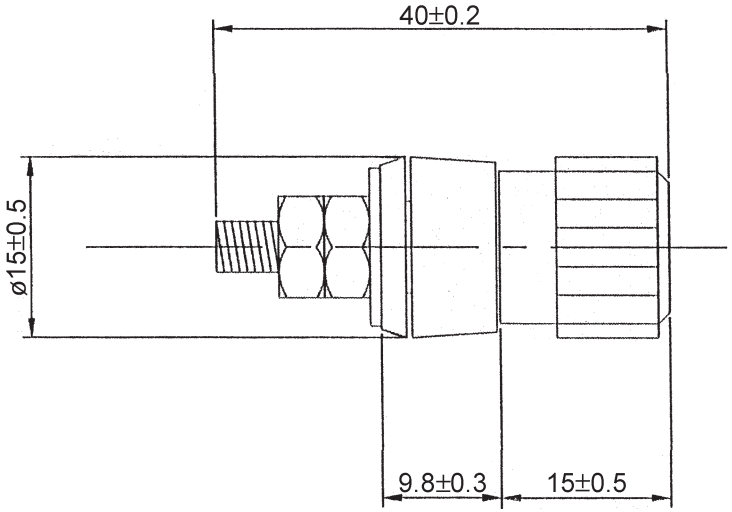

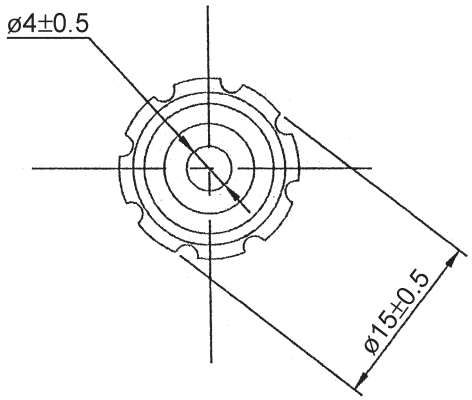

Part No.	Color
BP-121/B	All Black
BP-121/R	All Red
BP-121A/B	Black and Tranparent
BP-121A/R	Red and Tranparent

Technical requirement :
1. This product should meet EU RoHS related requirement.
2. The surface of plastic part should be without any crackle such as burr,lack,and so on phenomenon.
3. The surface of metal part should be without any defect such as scaur,nick,oxidation and plating problem.
4. The electronic performance should be the same as spec.
5. The un-specified tolerance is : <6±0.1
6~20±0.2
>20±0.3

Specifications:
Conatct Resistance : 30m ohm max.
Insluation Resistance : 100M ohm min. at DC 500V
Dielectric Strength : AC 500V for one minute.

DCI DRAGON CITY INDUSTRIES LIMITED			Design	K.W Law	Remark		Scale	
			Drawing	W.K Yeung	Remark		Material	
Item Name	Binding Post	Tolerance :	Check	K.L Wong	Remark		Dwg No.	80705-1114
Item No.	BP-121-EN / BP-121A-EN	Unit : mm	Approval	K.W Chan	Remark		Sheet	