THIS DRAWING IS UNPUBLISHED. RELEASED FOR PUBLICATION 2007
C COPYRIGHT 2007 BY TYCO ELECTRONICS CORPORATION. ALL RIGHTS RESERVED.

LOC	DIST
AI	-

REVISIONS

P	LTR	DESCRIPTION	DATE	DWN	APVD
	A11	Wrong notes on Table corrected	05OCT08	Arb	Brun
	A12	0.32±0.05 added	02MAR09	Mey	Brun
	A13	Column Sealing plug and Text SINGLE WIRE SEAL ... added	30JUL09	Fru	Brun
	A14	Wrong dimensions in area B5-6 corrected to H=4.6 and K=5.9	27JUL2010	Kirsch.	Schus

STRIP FORM / Bandware

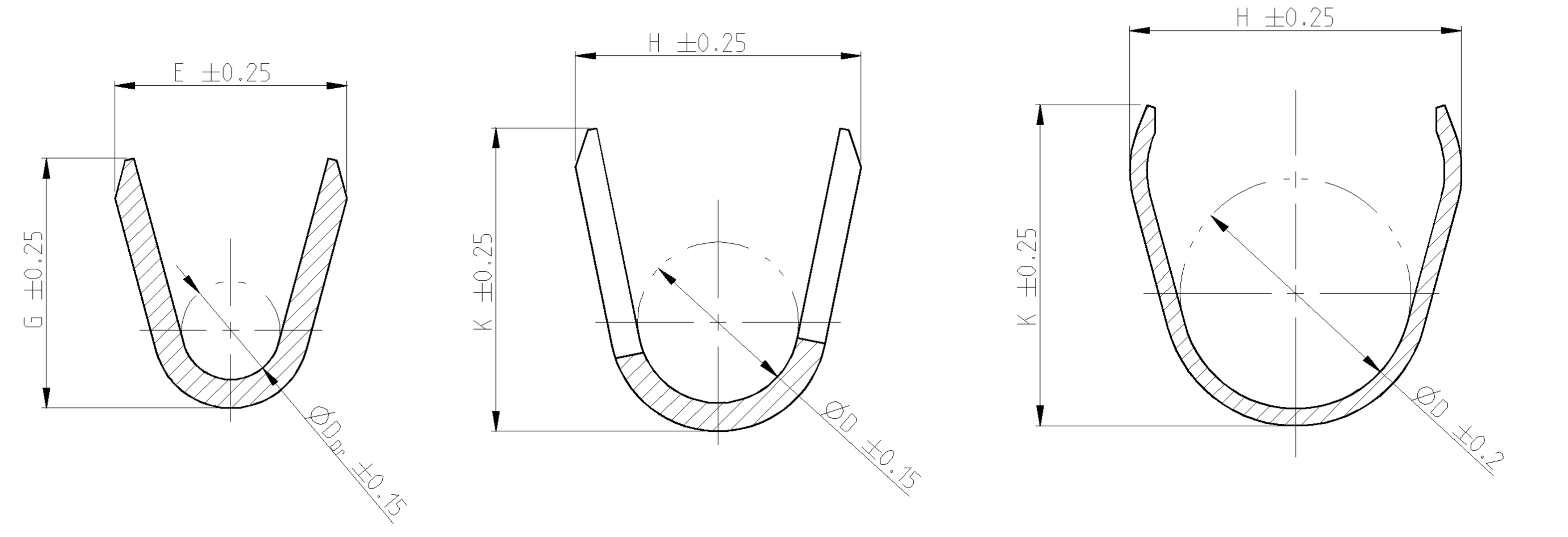

WIRE CRIMP Drahtcrimp

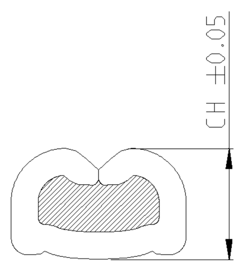

LOOSE PIECE / Einzelausfuehrung

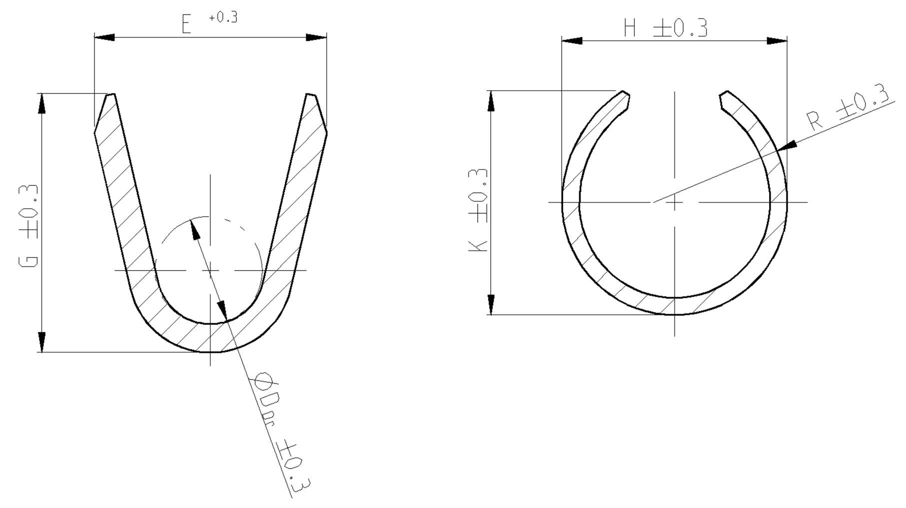

FLR- / FLK - WIRE
FLR- / FLK - Leitung

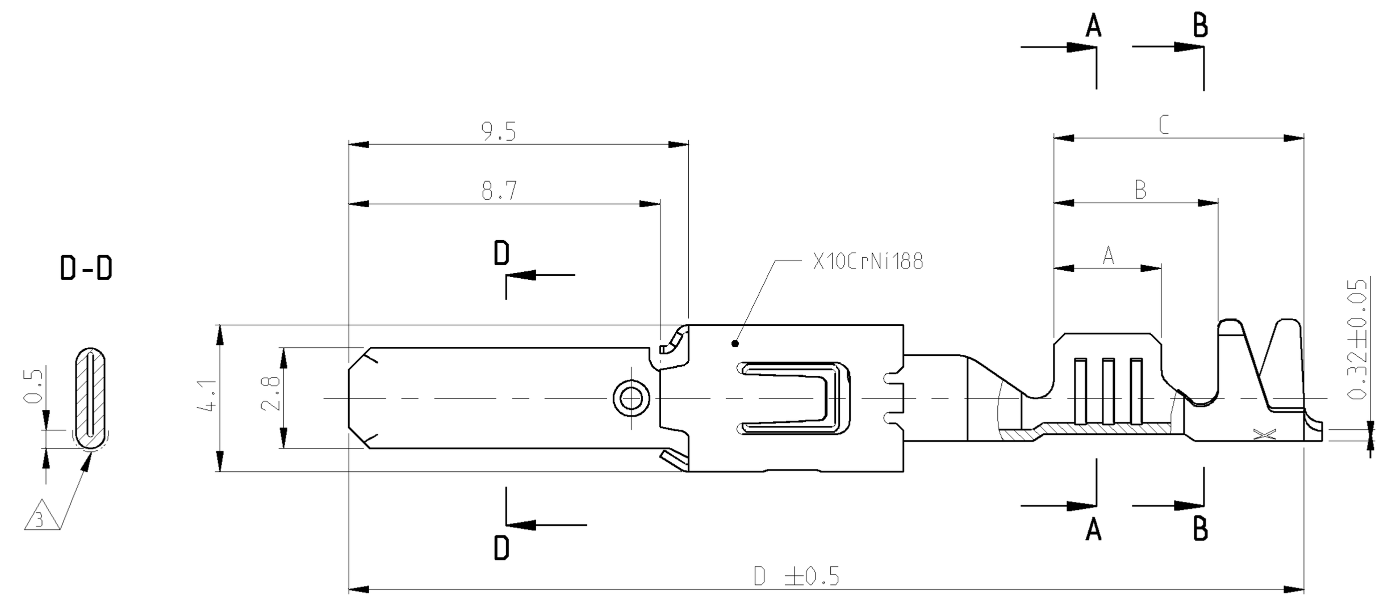

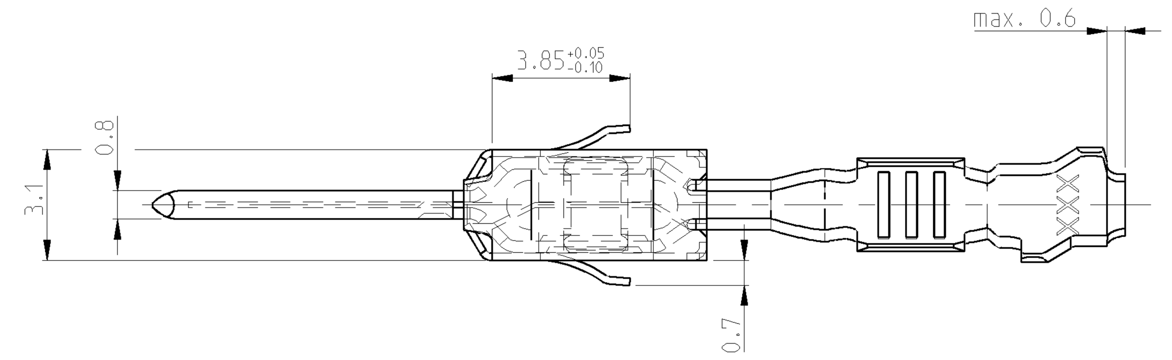

SINGLE WIRE SEAL
Einzeldichtungssystem

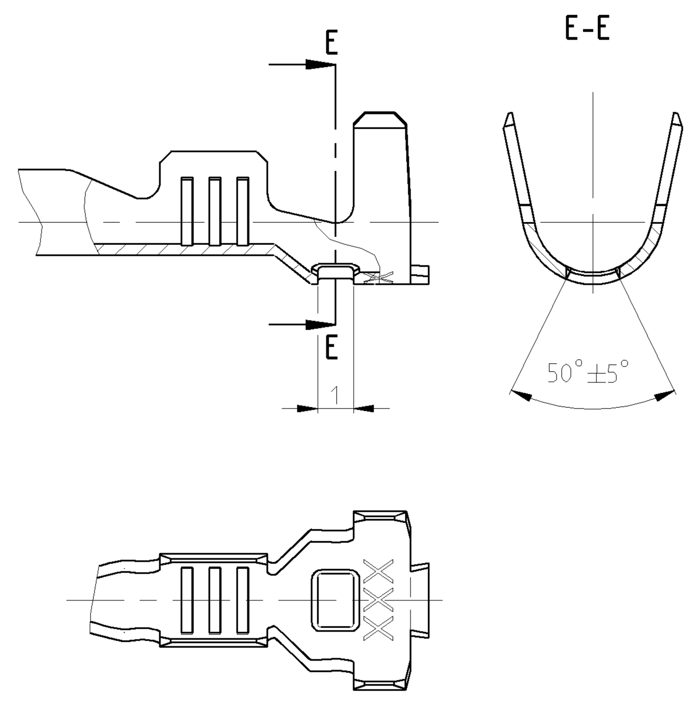

DESIGN FOR PN 968946

Ausfuehrung PN 968946

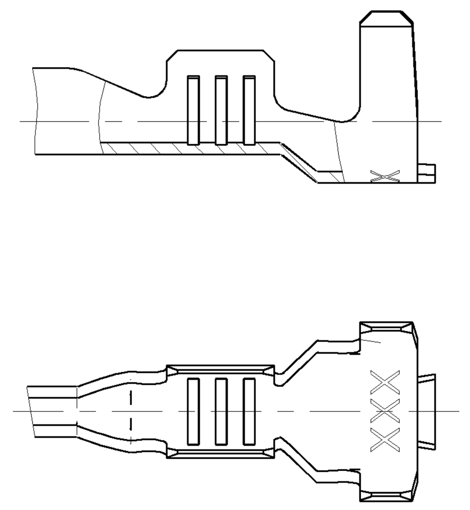

	TE ORDER-NO. STRIPFORM Bandware	REV	TE ORDER-NO LOOSE PIECE Einzelausfuehrung	MATERIAL Werkstoff	SURFACE Oberflaeche	DGB mm^2	INSULATIONØ IsolationsØ mm	STRIP FORM WIRE CRIMP Drahtcrimp (SEE / siehe SECTION A-A Schnitt A-A)	STRIP FORM INSUL. CRIMP Isolationscrimp (SEE / siehe SECTION B-B Schnitt B-B)	WIRE CRIMP HEIGTH CH Drahtcrimphoehe CH (SEE / siehe WIRE CRIMP Drahtcrimp)	LOOSE PIECE WIRE CRIMP Drahtcrimp (SEE / siehe SECTION A-A Schnitt A-A)	LOOSE PIECE INSUL. CRIMP Isolationscrimp (SEE / siehe SECTION B-B Schnitt B-B)	APPLICATION TOOL Anschlagwerkzeug	HAND TOOL Handzange	A	B	C	D	TE ORDER-NO. SINGLE WIRE SEAL Einzeldichtungssystem (CAVITY DIAMETER) (Kammerdurchmesser)	TE ORDER-NO. SEALING PLUG Blindstopfen
SINGLE WIRE SEAL / Einzeldichtungssystem	1-1719504-2	A	-	CuSn4	△1	12 AWG	max. 3.0	E = 4.0 G = 4.2 D_{Dr} = 2.0	A H = 5.3 K = 5.0 D = 3.6	AWG 12 = 2.0	-	-	1852291-3	-	3.5	6.0	7.6	26.8	△5	828922-1
	1-1719504-1	A	-		△4															
	3-968947-1	A	3-968966-1	CuSn0.20	△4	>2.5 - 4.0 FLR	max. 3.7	E = 4.5 G = 4.7 D_{Dr} = 2.3	B H = 6.2 K = 6.0 D = 4.3	4.0 mm^2 = 2.25	DIMENSION SEE STRIP FORM Masse siehe Bandware		MQC APPLICATOR 2-541537-2	539635-1 MATRIZE : 539727-2	4.3	6.0	8.5	28.5	828985 (Ø6.4) △6	828986-1
	2-968947-2	A	2-968966-2	CuFe	△1															
	2-968947-1	A	2-968966-1		△4															
	1-968947-2	A	1-968966-2	CuSn4	△1															
	1-968947-1	A	1-968966-1		△4															
	2-962916-3	E	2-963749-3	CuFe	△2	>1.0 - 2.5 FLR	max. 3.0	E = 3.6 G = 3.8 D_{Dr} = 1.7	A H = 5.3 K = 5.0 D = 3.6	2.5 mm^2 = 1.88 2.0 mm^2 = 1.73 1.5 mm^2 = 1.58	E = 2.8 G = 3.9 D_{Dr} = 1.7	H = 4.8 K = 4.5 R = 2.8	MQC APPLICATOR 2-878560-2	734440-1	3.5	6.0	7.6	26.8	828905 (Ø5.0)	828922-1
	2-962916-2	E	2-963749-2		△1															
	2-962916-1	E	2-963749-1		△4															
	1-962916-3	E	1-963749-3	CuSn4	△2															
	1-962916-2	E	1-963749-2		△1															
	1-962916-1	E	1-963749-1		△4															
	2-962915-3	E	2-963748-3	CuFe	△2	0.5 - 1.0 FLR	max. 2.1	E = 2.6 G = 2.9 D_{Dr} = 1.2	A H = 5.0 K = 4.8 D = 3.3	1.0 mm^2 = 1.36 0.75 mm^2 = 1.27 0.5 mm^2 = 1.18	E = 2.2 G = 2.9 D_{Dr} = 1.1	H = 4.6 K = 4.3 R = 2.3	MQC APPLICATOR 2-878559-2	734438-1	3.0	5.4	7.0	26.8	828904 (Ø5.0)	
	2-962915-2	E	2-963748-2		△1															
	2-962915-1	E	2-963748-1		△4															
	6-962915-6	E	-	CuSn4	△7 △2															
	1-962915-3	E	1-963748-3		△2															
	1-962915-2	E	1-963748-2		△1															
	1-962915-1	E	1-963748-1		△4															
	1-965982-3	A	1-965983-3	CuSn4	△2	0.2 - 0.5 FLK	max. 2.1	E = 2.1 G = 2.1 D_{Dr} = 0.8	A H = 4.7 K = 4.5 D = 3.2	0.5 mm^2 = 1.12 0.35 mm^2 = 1.05 0.2 mm^2 = 0.98	E = 1.7 G = 2.15 D_{Dr} = 0.8	H = 4.2 K = 4.15 R = 2.4	MQC APPLICATOR 2-878558-2	539635-1 MATRIZE : 539737-2	2.5	4.9	6.5	26.8	828904 (Ø5.0)	
	1-965982-1	A	1-965983-1		△4															
UNSEALED / ungedichtet	2-962843-3	C	2-963747-3	CuFe	△2	>1.0 - 2.5 FLK	2.4 - 3.7	E = 3.6 G = 3.8 D_{Dr} = 1.7	A H = 5.5 K = 5.7 D = 3.2	2.5 mm^2 = 1.88 1.5 mm^2 = 1.58	E = 2.8 G = 3.9 D_{Dr} = 1.7	H = 4.2 K = 5.1 R = 2.4	MQC APPLICATOR 2-878552-2	734417-3	3.6	5.2	8.9	28.6		
	2-962843-2	C	2-963747-2		△1															
	2-962843-1	C	2-963747-1		△4															
	1-962843-3	C	1-963747-3	CuSn4	△2															
	1-962843-2	C	1-963747-2		△1															
	1-962843-1	C	1-963747-1		△4															
	3-968946-1	A	3-968965-1	CuSn0.20	△4	>2.5 - 4.0 FLR	2.7 - 3.7	E = 4.5 G = 4.7 D_{Dr} = 2.3	A H = 5.7 K = 5.9 D = 3.3	4.0 mm^2 = 2.25	E = 3.4 G = 4.7 D_{Dr} = 2.3	H = 4.6 K = 5.1 R = 2.6	MQC APPLICATOR 2-541534-2	539635-1 MATRIZE : 539723-2	4.3	6.6	8.5	28.5		
	2-968946-2	A	2-968965-2	CuFe	△1															
	2-968946-1	A	2-968965-1		△4															
	1-968946-2	A	1-968965-2	CuSn4	△1															
	1-968946-1	A	1-968965-1		△4															
	2-962842-3	E	2-963746-3	CuFe	△2	>1.0 - 2.5 FLR	2.1 - 2.9	E = 3.6 G = 3.8 D_{Dr} = 1.7	A H = 4.3 K = 4.5 D = 2.6	2.5 mm^2 = 1.88 2.0 mm^2 = 1.73 1.5 mm^2 = 1.58	E = 2.8 G = 3.9 D_{Dr} = 1.7	H = 3.6 K = 4.1 R = 2.1	MQC APPLICATOR 2-878551-2	734417-2	3.6	5.2	8.2	27.9		
	2-962842-2	E	2-963746-2		△1															
	2-962842-1	E	2-963746-1		△4															
	1-962842-3	E	1-963746-3	CuSn4	△2															
	1-962842-2	E	1-963746-2		△1															
	1-962842-1	E	1-963746-1		△4															
	2-962841-3	F	2-963745-3	CuFe	△2	0.5 - 1.0 FLR	1.4 - 2.1	E = 2.5 G = 2.8 D_{Dr} = 1.1	A H = 3.2 K = 3.4 D = 1.8	1.0 mm^2 = 1.36 0.75 mm^2 = 1.27 0.5 mm^2 = 1.18	E = 2.2 G = 2.8 D_{Dr} = 1.1	H = 2.8 K = 3.0 R = 1.6	MQC APPLICATOR 2-878550-2	734417-1	3.0	4.6	7.0	26.7		
	2-962841-2	F	2-963745-2		△1															
	2-962841-1	F	2-962841-1		△4															
	1-962841-3	F	1-963745-3	CuSn4	△2															
	1-962841-2	F	1-963745-2		△1															
	1-962841-1	F	1-963745-1		△4															
	2-963860-3	B	2-963861-3	CuFe	△2	0.2 - 0.5 FLR	1.3 - 1.6	E = 2.1 G = 2.1 D_{Dr} = 0.8	A H = 2.9 K = 2.9 D = 1.4	0.5 mm^2 = 1.12 0.35 mm^2 = 1.05 0.2 mm^2 = 0.98	E = 1.7 G = 2.1 D_{Dr} = 0.8	H = 2.5 K = 2.5 R = 1.4	MQC APPLICATOR 2-878549-2	734538-1	2.5	3.7	5.8	25.5		
	2-963860-2	B	2-963861-2		△1															
	2-963860-1	B	2-963861-1		△4															
	1-963860-3	B	1-963861-3	CuSn4	△2															
	1-963860-2	B	1-963861-2		△1															
	1-963860-1	B	1-963861-1		△4															

STRIP FORM Bandware / LOOSE PIECE Einzelausfuehrung — CRIMP DIMENSION mm / Crimpabmessungen mm

EXTRACTION TOOL / Ausdrueckwerkzeug / No. 968107-1

NOTES
Bemerkungen

△1 CONTACT AREA PRE SILVER MIN. 3 µm
CANTILEVER SPRING PLAIN
Kontaktzone vorversilbert min. 3 µm
Ueberfeder blank

△2 CONTACT BODY Ni-PLATING MIM. 0.5 µm; CONTACT AREA PRE-GOLD MIN. 0.6 µm
OVER NICKEL; CRIMP AREA PRE-TIN
CANTILEVER SPRING PLAIN
Kontaktkoerper vernickelt min. 0.5 µm; Kontaktzone vorvergoldet min. 0.6 µm ueber Nickel
Crimpzone vorverzinnt; Ueberfeder blank

△3 _.._.._ IN THIS AREA CRACK SHAPING AT THE SURFACE PERMISSIBLE
In diesem Bereich Rissbildung in der Oberflaeche zulaessig

△4 PRE-TIN MIN. 1 µm; CANTILEVER SPRING PLAIN
vorverzinnt min. 1 µm; Ueberfeder blank

△5 AWG 12 TXL 828905-1 OR / oder 282536-1
AWG 12 GXL 638865-1

△6 ATTENTION! CONSTRUCTION OF THE CONTACT CAVITY IN THE AREA
OF THE SINGLE WIRE SEAL IS $Ø6.4^{+0.1}_{-0.05}$
Achtung! Die Kammer ist im Bereich der Einzeldichtung
auf $Ø6.4^{+0.1}_{-0.05}$ auszulegen

△7 PUNCHED WITH VOLATILIZING STAMPING-OIL
Gestanzt mit verfluechtigendem Stanzoel

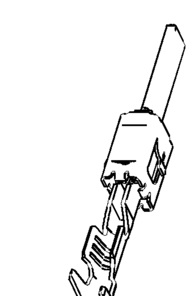

THIS DRAWING IS A CONTROLLED DOCUMENT FOR TYCO ELECTRONICS CORPORATION. IT IS SUBJECT TO CHANGE AND THE CONTROLLING ENGINEERING ORGANIZATION SHOULD BE CONTACTED FOR THE LATEST REVISION.

DIMENSIONS:	mm
TOLERANCES UNLESS OTHERWISE SPECIFIED:	0 PLC ± / 1 PLC ± / 2 PLC ± / 3 PLC ± / 4 PLC ± — ±0.2; ANGLES ±1.5°
MATERIAL	-
FINISH	-
DWN	K.Gerlach 14JUN99
CHK	M.Bleicher
APVD	-
PRODUCT SPEC	108-18063
APPLICATION SPEC	114-18051
WEIGHT	-
	Tyco Electronics — tyco Electronics AMP GmbH, 64625 Bensheim (Germany)
NAME	PRODUCT GROUP DRAWING FOR TAB 2.8x0.8 Produktgruppenzeichnung fuer Flachstecker 2.8x0.8
SIZE	A0
CAGE CODE	00779
DRAWING NO	C 1355052
RESTRICTED TO	-
	CUSTOMER DRAWING
SCALE	8:1
SHEET	1 OF 1
REV	A14

AMP 4806 REV 31MAR2000