KEMET Part Number: CBR06C369BAGAC

CBR-SMD RF C0G, Ceramic, 3.6 pF, +/-0.1 pF, 250 VDC, C0G, SMD, Fixed, RF, Ultra High Q, Low ESR, Class I, 0603

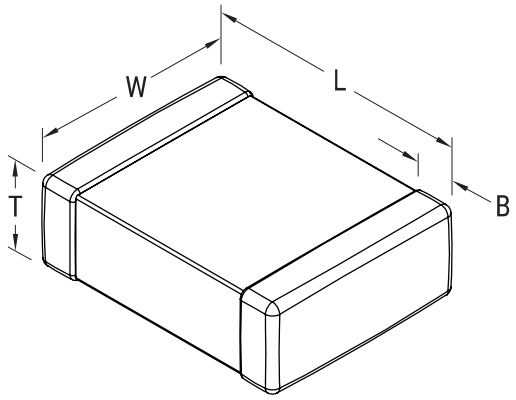

General Information	
Series:	CBR-SMD RF C0G
Style:	SMD Chip
Description:	SMD, Fixed, RF, Ultra High Q, Low ESR, Class I
Features:	Ultra High Q, Low ESR, Class I
RoHS:	Yes
Termination:	Tin
Marking:	No
AEC-Q200:	No
Notes:	Solder Wave or Solder Reflow.
Shelf Life:	78 Weeks
MSL:	1

Dimensions	
Chip Size	0603
L	1.6mm +/-0.1mm
W	0.8mm +/-0.1mm
T	0.8mm +/-0.07mm
B	0.4mm +/-0.15mm

Packaging Specifications	
Packaging:	T&R, 180mm, Plastic Tape
Packaging Quantity:	4000

Specifications	
Capacitance:	3.6 pF
Capacitance Tolerance:	+/-0.1 pF
Voltage DC:	250 VDC
Dielectric Withstanding Voltage:	500 VDC
Temperature Range:	-55/+125°C
Temperature Coefficient:	C0G
Dissipation Factor:	0.212%
Aging Rate:	0% Loss/Decade Hour
Insulation Resistance:	10 GOhms
Quality Factor:	472

Statements of suitability for certain applications are based on our knowledge of typical operating conditions for such applications, but are not intended to constitute - and we specifically disclaim - any warranty concerning suitability for a specific customer application or use. This Information is intended for use only by customers who have the requisite experience and capability to determine the correct products for their application. Any technical advice inferred from this Information or otherwise provided by us with reference to the use of our products is given gratis, and we assume no obligation or liability for the advice given or results obtained.

© 2006 - 2021 KEMET