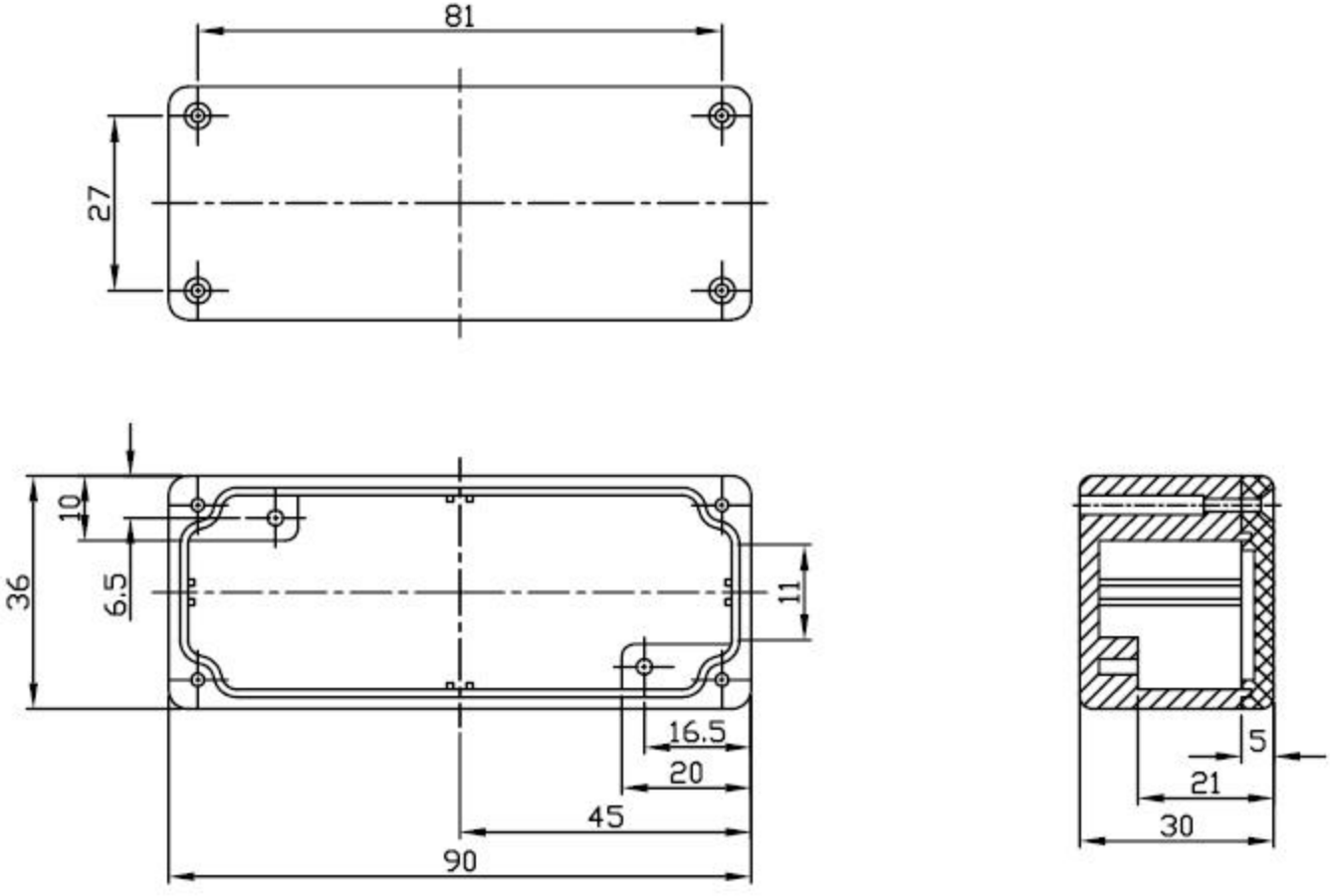
81
27
10
36
6.5
11
16.5
20
45
90
5
21
30