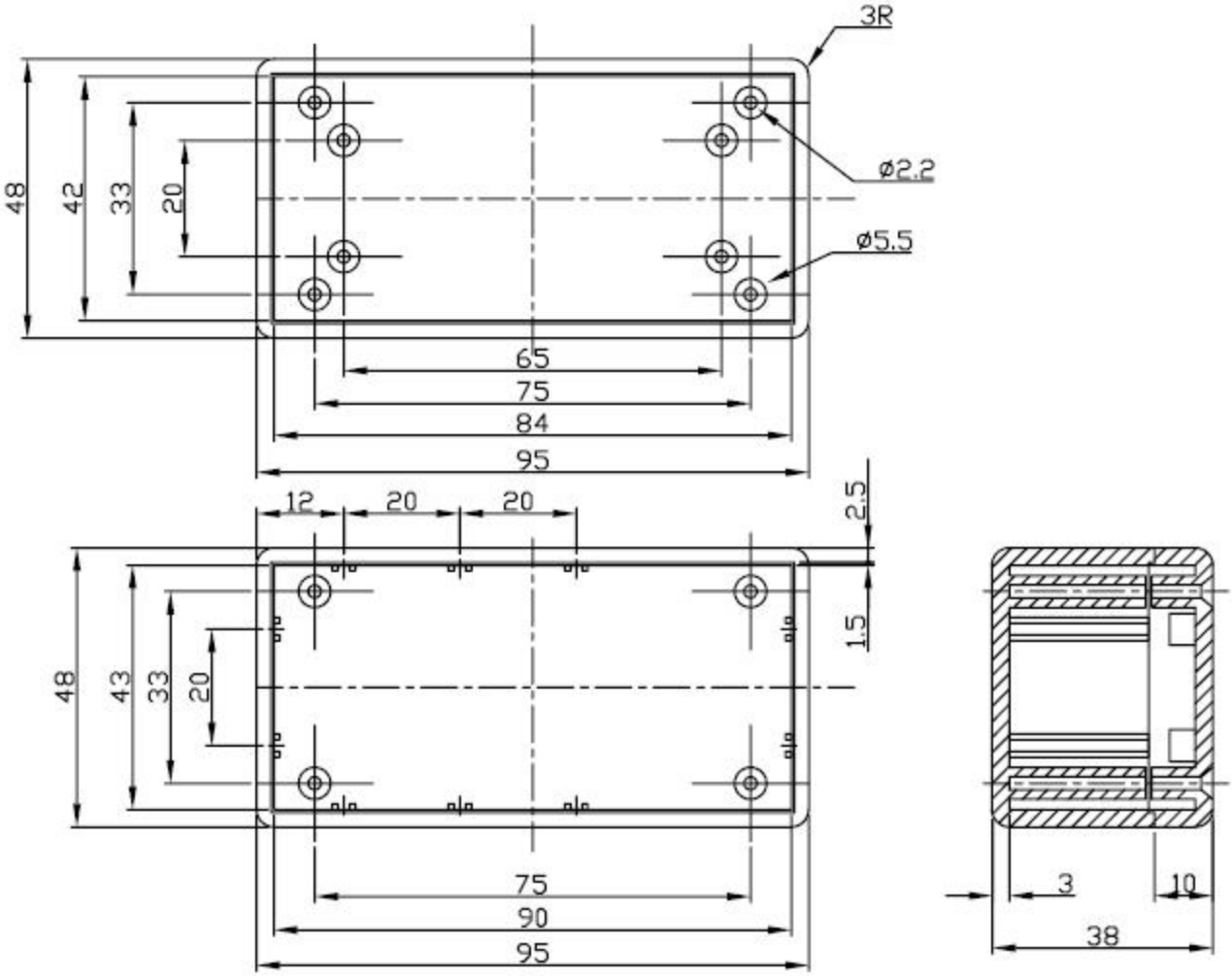
3R
ø2.2
ø5.5
48
42
33
20
65
75
84
95
12
20
20
2.5
1.5
48
43
33
20
75
90
95
3
10
38