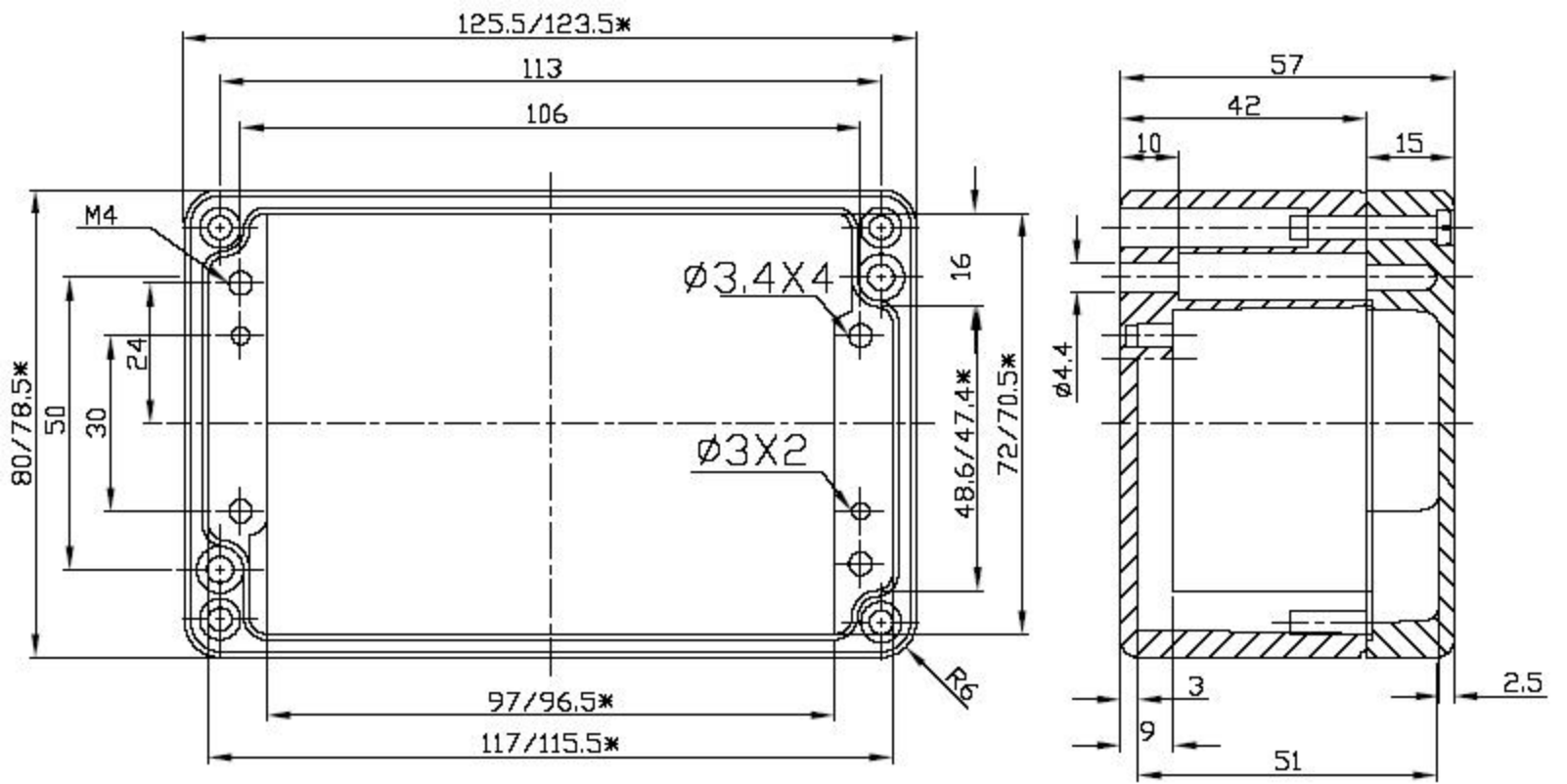
125.5/123.5*
113
106
M4
Ø3.4X4
Ø3X2
16
24
30
50
80/78.5*
48.6/47.4*
72/70.5*
R6
97/96.5*
117/115.5*
57
42
10
15
ø4.4
3
9
51
2.5