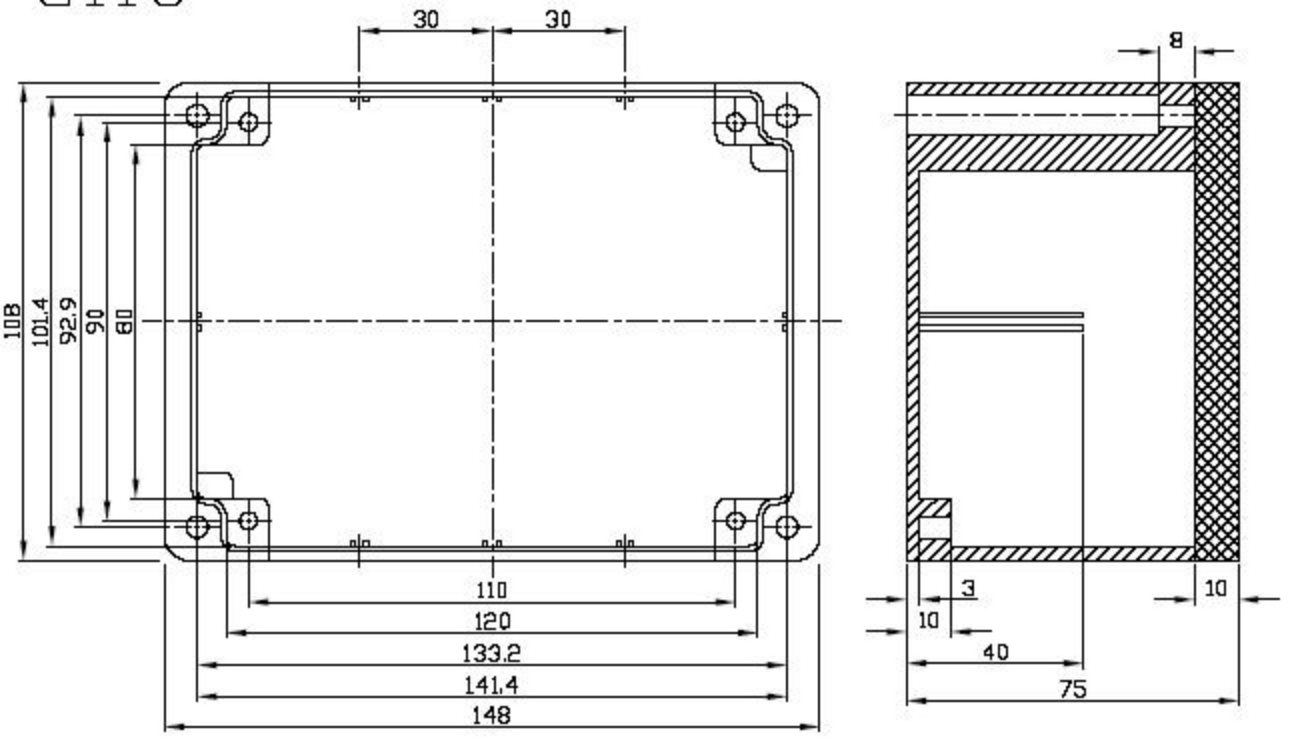
30
30
108
101.4
92.9
90
80
110
120
133.2
141.4
148
8
3
10
10
40
75