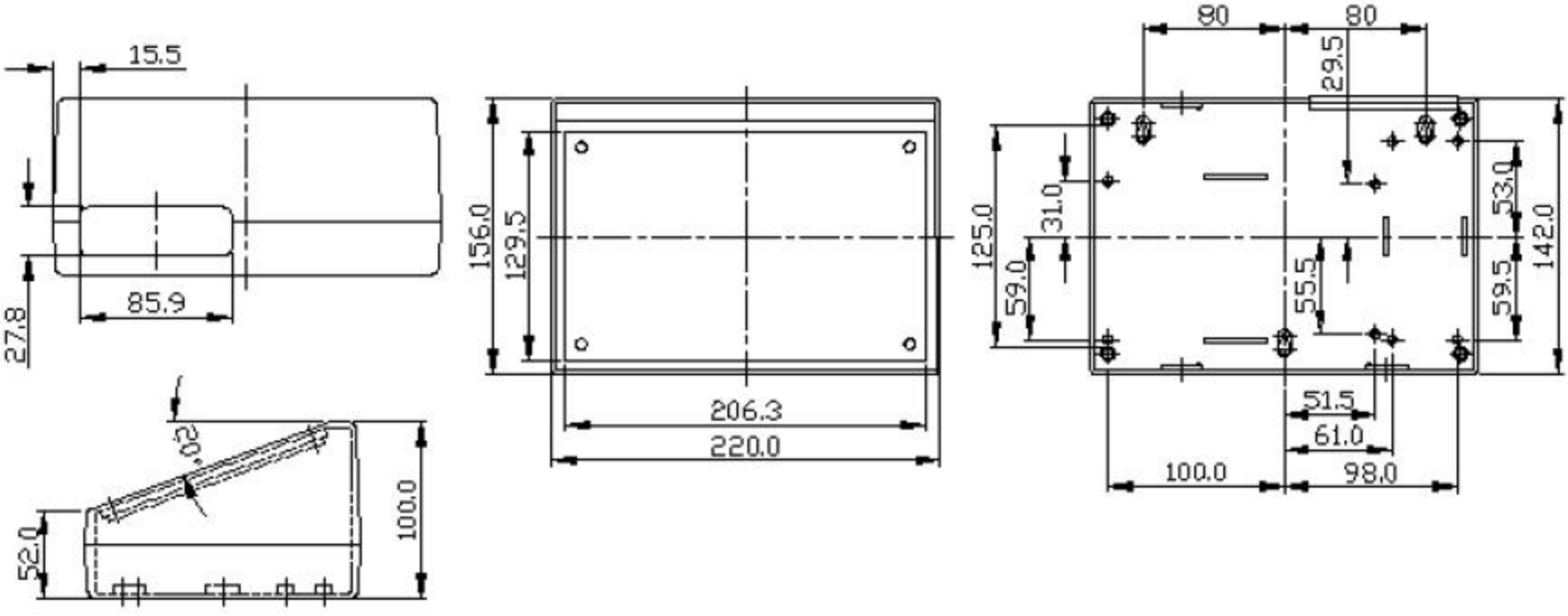
15.5
85.9
27.8
20°
52.0
100.0
156.0
129.5
206.3
220.0
80
80
29.5
125.0
31.0
59.0
55.5
53.0
142.0
59.5
51.5
61.0
100.0
98.0