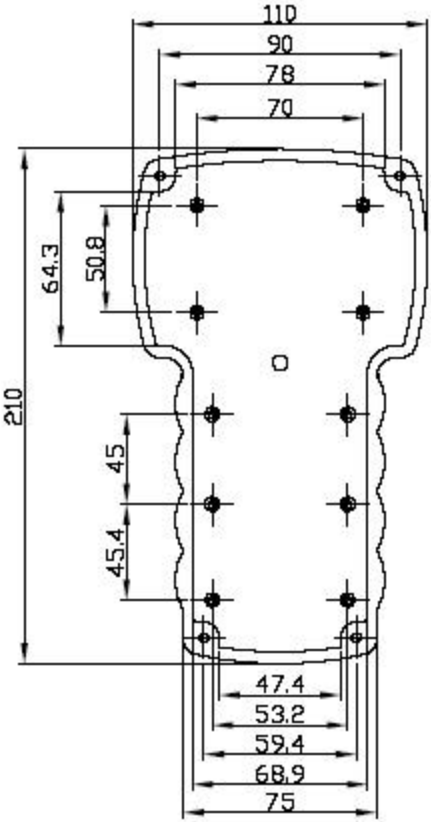
110
90
78
70
64.3
50.8
210
45
45.4
47.4
53.2
59.4
68.9
75

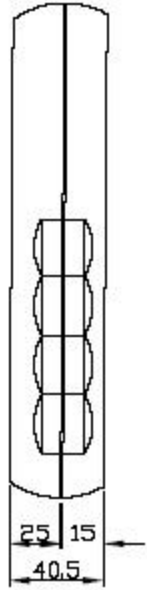
25
15
40.5

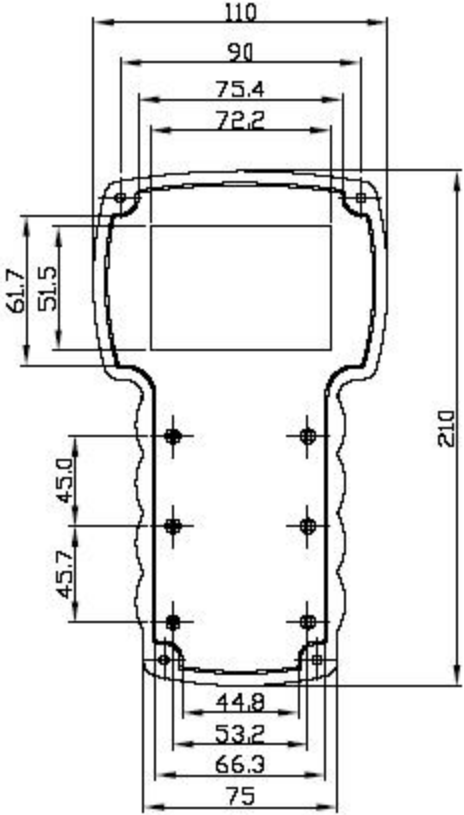
110
90
75.4
72.2
61.7
51.5
210
45.0
45.7
44.8
53.2
66.3
75