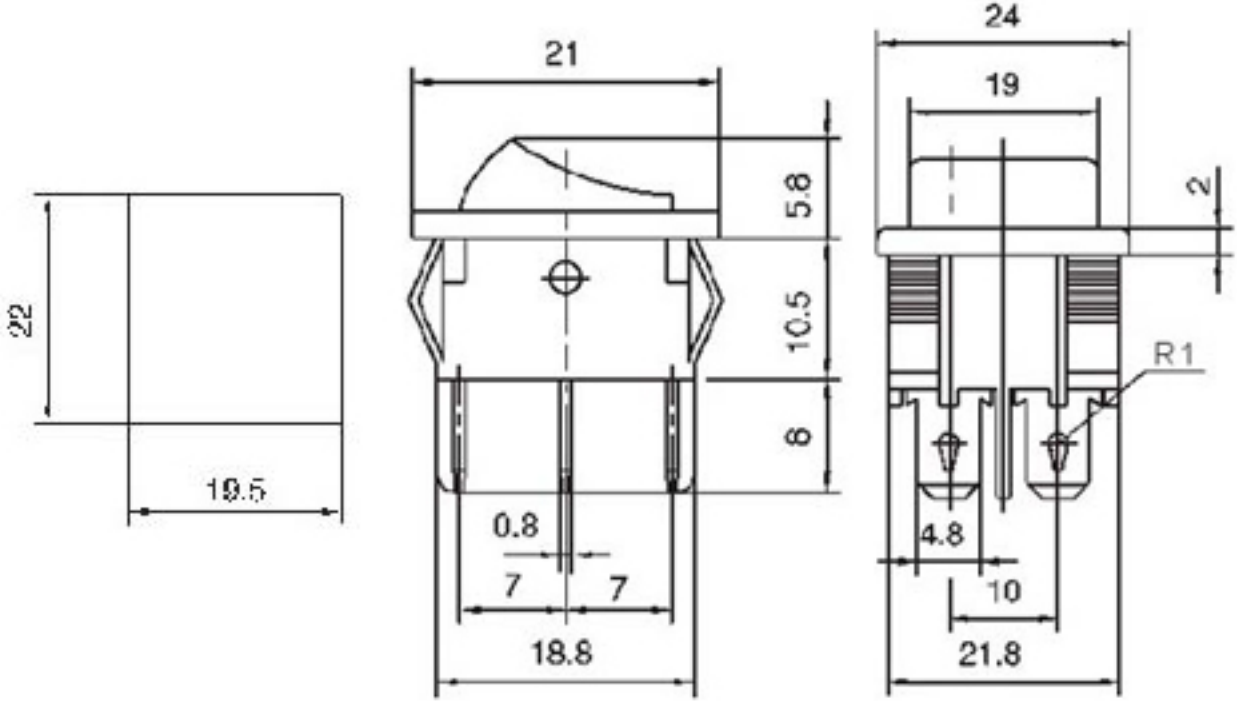
22
19.5
21
5.8
10.5
6
0.8
7
7
18.8
24
19
2
R1
4.8
10
21.8