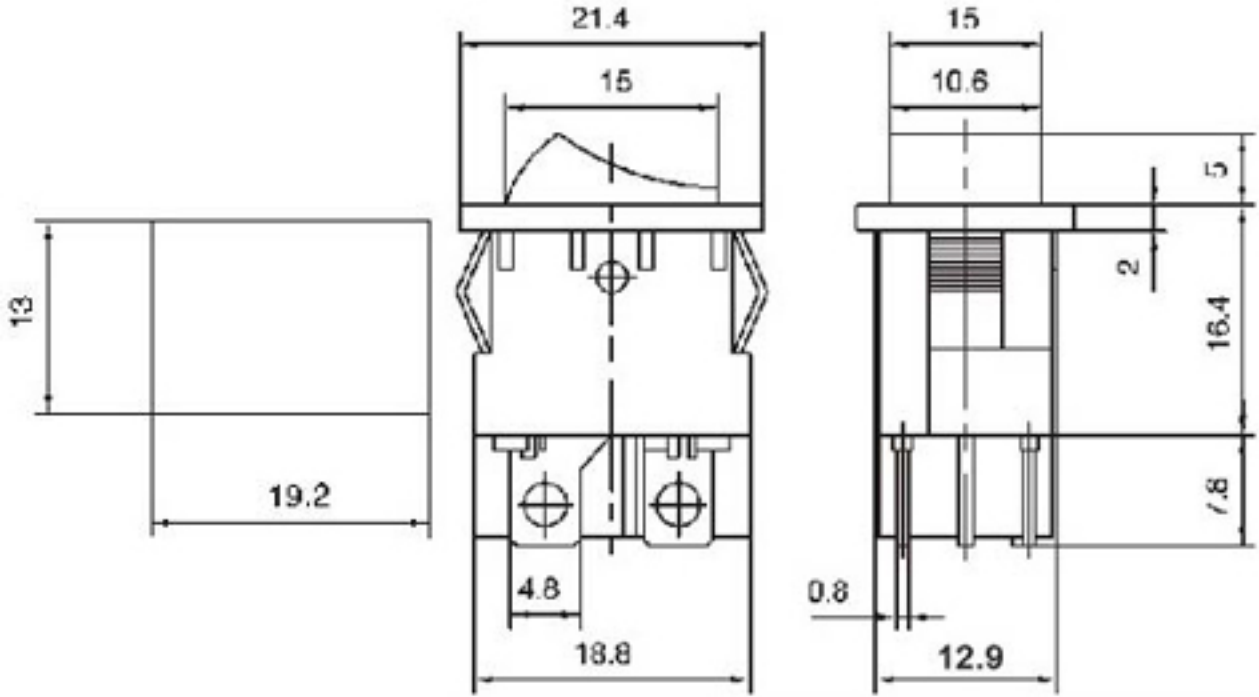
21.4
15
15
10.6
5
2
16.4
7.8
13
19.2
4.8
18.8
0.8
12.9