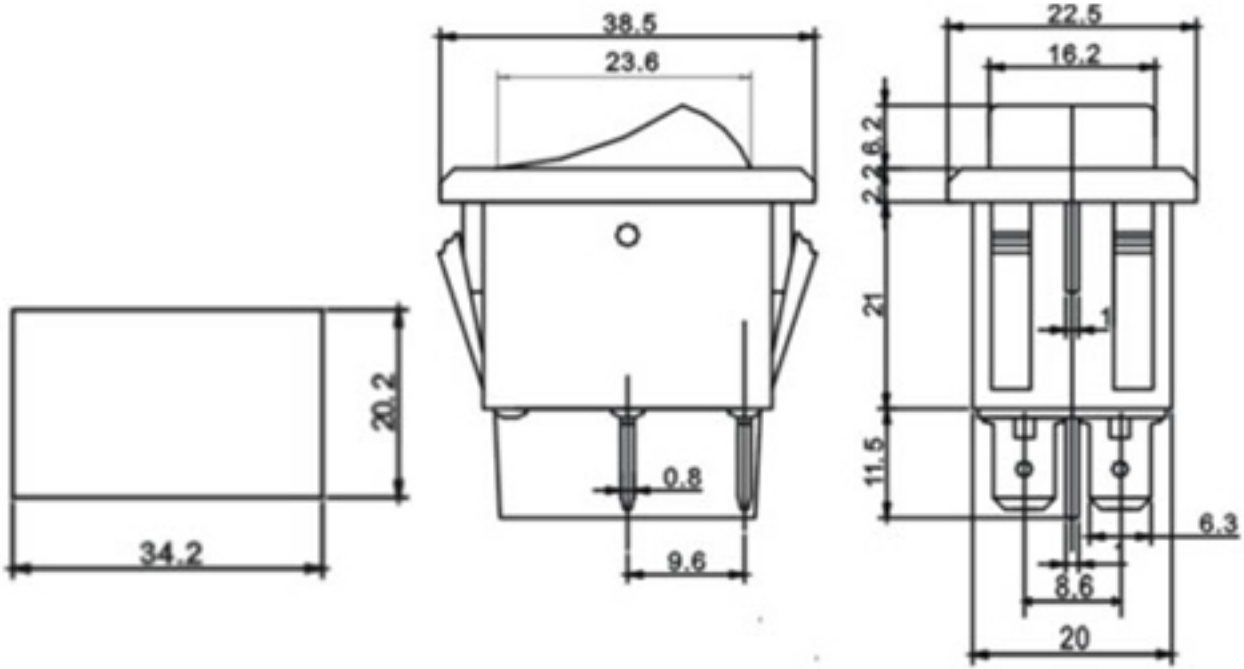
38.5
23.6
22.5
16.2
2.2
8.2
21
1
11.5
20.2
0.8
6.3
34.2
9.6
8.6
20