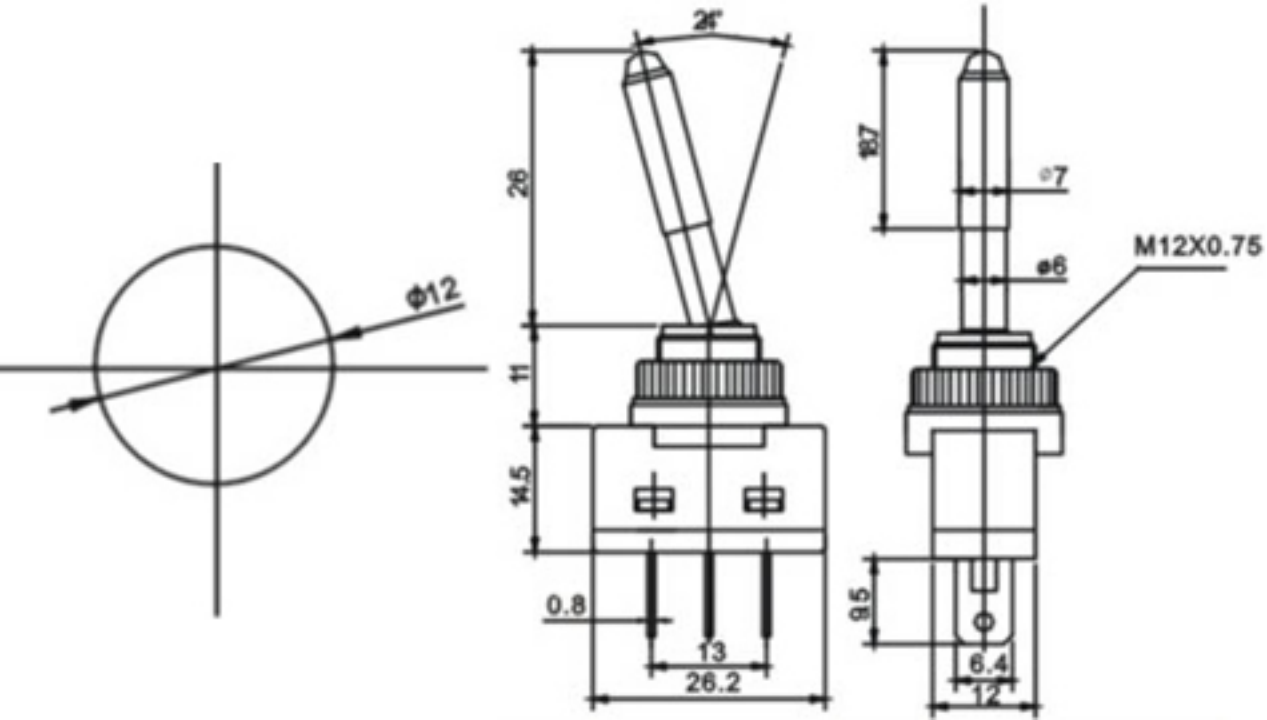
Φ12
26
11
14.5
0.8
13
26.2
18.7
ø7
ø6
M12X0.75
9.5
6.4
12