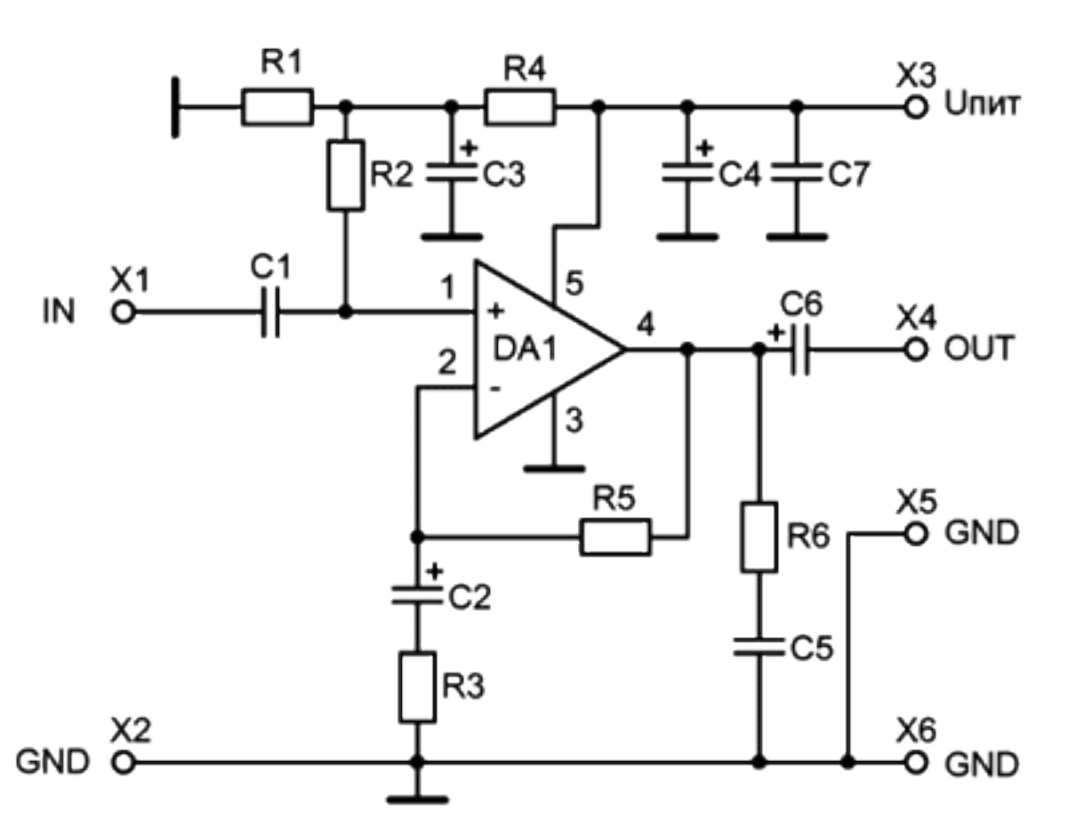
R1
R4
X3
Uпит
R2
C3
C4
C7
X1
C1
IN
1
5
+
DA1
4
C6
X4
OUT
2
-
3
R5
X5
R6
GND
C2
C5
R3
X2
X6
GND
GND