COPYRIGHT IN THIS DRAWING BELONGS TO VERO TECHNOLOGIES Ltd. IT MUST NOT BE COPIED OR DISCLOSED TO THIRD PARTIES WITHOUT WRITTEN PERMISSION FROM VERO TECHNOLOGIES Ltd.

WARNING: THIS DRAWING HAS BEEN CREATED AND STORED ELECTRONICALLY – DO NOT SCALE. THIS COPY MAY NOT BE UP-TO-DATE. IF IN DOUBT – ASK.

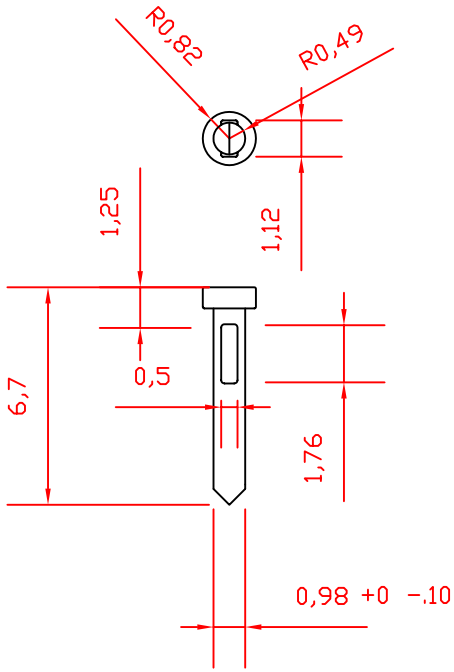

Non Saleable part Number:- 18-1660
Saleable Part No in bags of 500:- 18-56705
RS Part No:- 631-9596

Note 1 The shape of the barbs may vary provided the pin is a firm fit when assembled to a circuit board

Note 2 Unspecified radii may be between 0.05 and 0.25

E.C.N.	DRG ISSUE	DESCRIPTION	DATE
	1	Released for manufacture	23/11/07

Order Code	VERO TECHNOLOGIES Ltd	PROJECTION	TITLE				
18-1660	Unit 25, Solent Ind. Est., Hedge End, Southampton, Hants, SO30 2FY, UK. Tel +44 (0) 1489 776 930	TOLERANCES EXCEPT WHERE OTHERWISE STATED: OVER 1 METRE ± 1mm; 0. ± 0.5; 0.0 ± 0.3; 0.00 ± 0.15; ANGLE ± 1.0	Wiring Pin for 1.00 hole		CHECKED J.M.	DRAWN D.S.	DRG No 18-1660
	B/A	ALL DIMENSIONS IN MILLIMETRES	MATERIAL: Brass wire 1.2 dia ±.05	FINISH: BS EN 1872 Dull tin	FIRST USED ON.		