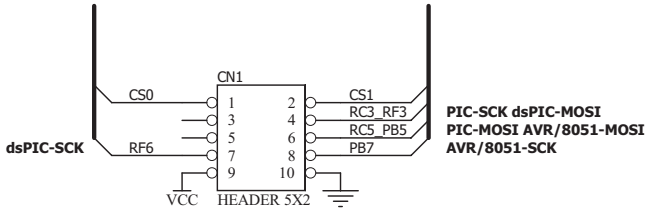


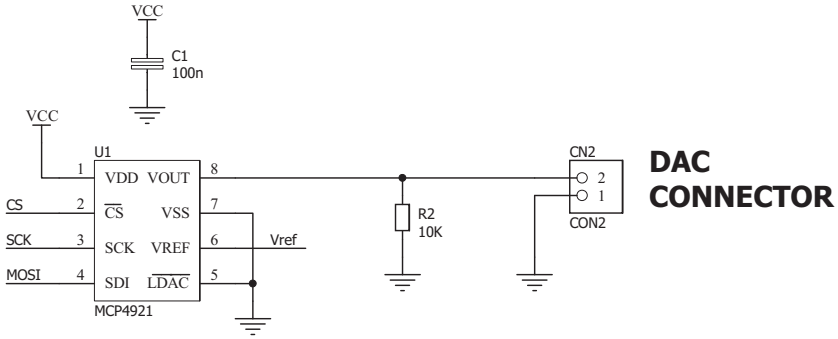


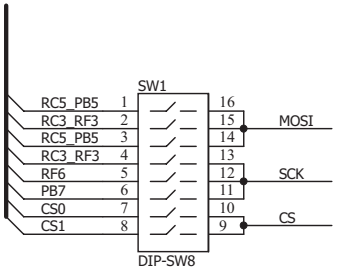


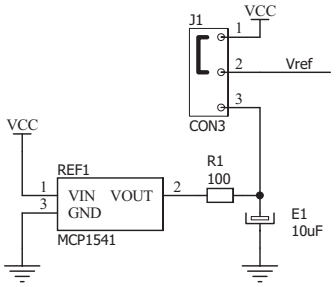


DAC Schematic v120



MikroElektronika Development systems