AVX, 3, 662, 413

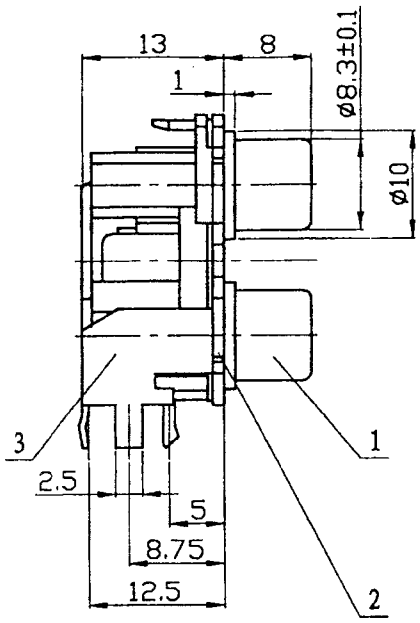

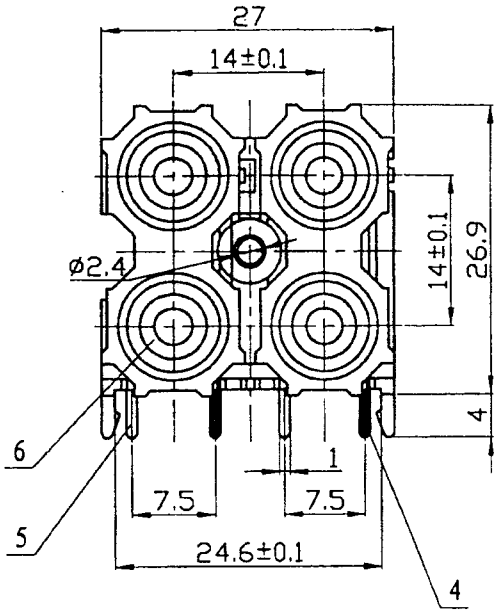

Dimensions of PC board holes

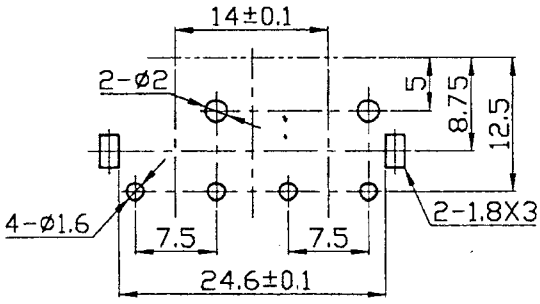

Circuit Diagram

Color layout

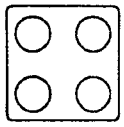

Specification:

1. The Cadmium content of plastic base should be less than 5ppm, the lead content should be less than 100ppm, This standard can meet Sony (SS-00259 Standard) stipulated.
2. The surface of the plastic parts should be smooth and clean, without crack and burr and also, without shorting material problem.
3. The surface of the metal parts should be smooth and clean, without impress and scratch and oxidation and plating problem;
4. Electrical feature should be accordance with tech. spec.
5. Unspecified tolerance: 0~6: ±0.1
   >6~20: ±0.2
   >20: ±0.3

No:	Name	QTY	Material	Coat Cladding Material
6	Washer	4	ABS .94HB	———
5	Pincer needle (L)	2	QSn6.5-0.1 t=0.4	D.CuSn
4	Pincer needle (S)	2	QSn6.5-0.1 t=0.4	D.CuSn
3	Base	1	ABS .94HB	———
2	Cover	2	ABS (Black) .94HB	———
1	Outer conductor (twin)	2	H65 Brass t=0.4	D.CuSn

of Old Base Map

Sign	Place number	Changed document number	Signer	Date

Signer

Designer: Li Dong
Verifier: Mengxian Yu
Verifier:
Technolgy: Lixin Zhou
Standarization:
Approved: Jiufeng Bao
Date: 2004.12.3

RS-413

Pin Jack

Design Mark	Weight	Proportion
A		1.5:1

Total 1 Page Page 1

DEAGON CITY INDUSTRIES LIMITED 龍豐實業有限公司